SPARES DIVISION

SPARE PARTS CATALOGUE

for

JAGUAR 420

Incorporating

AUTOMATIC TRANSMISSION UNIT
OVERDRIVE UNIT
POWER-ASSISTED STEERING
AIR CONDITIONING INSTALLATION

ENGINE NUMBERS

7F. 1001 ONWARDS

NOTE: Suffix /8 or /9 to the Engine Number denotes the Compression Ratio

CHASSIS NUMBERS

RIGHT-HAND DRIVE	1F.1001 ONWARDS
LEFT-HAND DRIVE	1F.25001 ONWARDS

JAGUAR CARS LIMITED, COVENTRY, ENGLAND

Telephone:
Allesley 2121 (P.B.X.)

Telegraphic Address:
"JAGUAR", COVENTRY Telex 31/622

Code: Bentley's 2nd

INTERPRETATION OF CATALOGUE

Attention is drawn to the lay-out of this catalogue. It will be observed that the heading of each assembly is printed in **BOLD BLOCK LETTERS,** whilst the spares relevant to each assembly are **printed in small type and inset to the right.**

The fact that certain items (printed in small type) are not "inset" indicates that they do not form part of any assembly and must, therefore, be ordered as individual items.

ILLUSTRATIONS

To aid identification of spares, " exploded " illustrations are incorporated in this catalogue.

These illustrations may be used in the following manner:—

(a) If a Crankshaft is required, the index shows that the details for this item are printed on page 1-2 and that it is illustrated on Plate 1. Turning to page 1-2, the necessary information for the ordering of the part is given, whilst the column headed " Plate No." indicates that reference to item number 28 on Plate 1 will give a photographic view of the component required.

(b) The details for each illustrated item are printed in the script in numerical Plate number order. Any item may therefore be first identified photographically. For example, if Friction Pads are required for the Front Brakes, a picture of the part may be found on Plate No. 29, together with the Plate reference number. It is now an easy matter to find Plate number "29-8" in the script and the Part No. and Technical Description are at once apparent.

ORDERING

Customers are advised to make themselves familiar with the method of ordering spare parts in accordance with the explanatory notes which follow.

COLOURED PAGES

Coloured pages are used throughout this Catalogue to help users to make quick reference to the sections indicated by the applicable colour.

The following code gives the key to colours :

WHITE PAPER denotes items for **STANDARD TRANSMISSION**

PINK PAPER denotes items for **AUTOMATIC TRANSMISSION**

BLUE PAPER denotes items for **OVERDRIVE TRANSMISSION**

PUBLICATION J.39 PRICE £2 0s. 0d. PUBLISHED SEPTEMBER, 1967

INSTRUCTIONS FOR ORDERING SPARE PARTS

To avoid delay through inaccurate interpretation, IT IS OF GREAT IMPORTANCE that the information detailed in the following paragraphs be strictly adhered to when placing orders.

CAR TYPE

Always quote the engine and chassis numbers except when Stock Orders are placed, in which case the Year and Model must be indicated.

If gearbox components are required, it is necessary to quote on the order the **serial number** of the Gearbox, together with any **prefix and suffix letters** which may be indicated.

If parts are required for an **Overdrive Unit,** the **serial number** of the unit affected must be shown on the order.

An order for spares for an Automatic Transmission Unit must be accompanied by the **Transmission Serial Number.**

The Serial Numbers are stamped on a plate which is fitted to the R.H. Front Wing Valance, below the Petrol Filter, and on the Units referred to.

DETAILS OF PARTS REQUIRED

When ordering, the most complete information should be given to enable us to deal with your requirements expeditiously and to minimise delay in the despatch of the goods. Therefore we strongly recommend that the following procedure be adopted:—

(1) Identify part with technical description in catalogue.

(2) On Order, quote (a) part number, (b) technical description.

Note: In no case should the illustration plate number be given.

(3) If doubt exists as to the part number or technical description, a dimensioned sketch will assist in the interpretation of the order, or, alternatively, the old part should accompany the order as a pattern. When patterns are sent, it is most important that they be labelled, indicating the name and address of the sender, together with any reference such as order number, etc. Patterns will not be returned unless instructions to that effect accompany the order. In the absence of such instructions, patterns will be scrapped after retention for a period of ONE WEEK.

(4) To order in "sets" is misleading. Please, therefore, **state the specific quantity required.**

SPECIAL ATTENTION

Particular attention is drawn to the fact that when such items as Wings, Doors, Door Glasses, etc., are required, care should be taken to indicate whether they are located on the left-hand or right-hand side of the car. The position is determined by the driver's own left or right hand when seated in the car.

Orders for Carpets, Casings, etc., should clearly state the precise colour required.

DESPATCH INSTRUCTIONS

The full address of the destination to which the goods are to be sent, together with that of the customer, should be clearly defined.

Whilst every effort will be made to observe customers' wishes as to the mode of transport, it is the normal custom to utilize the quickest possible method, whether it be post, passenger train, or road transport, this being dependent upon the size and weight of the package and the destination to which it is to be sent.

PRICES

Recommended retail prices, shown in the Jaguar Parts Master Price List, are subject to alteration without notice, and are ex-Works prices. Postage, carriage, and packing will be charged extra.

DAMAGE BY FIRE OR ACCIDENT

Whilst every precaution is taken, we do not accept liability for damage which may be caused by fire to any motor car or part thereof entrusted to us for any purpose whatsoever. Nor is liability accepted for accidental damage.

INDEX TO SECTIONS

DESCRIPTION OF SECTIONS	SECTION No.	PLATE
ACCELERATOR CONTROLS (R.H. DRIVE STANDARD OR OVERDRIVE TRANSMISSION)	9	9
ACCELERATOR CONTROLS (L.H. DRIVE STANDARD OR OVERDRIVE TRANSMISSION)	10	10
ACCELERATOR CONTROLS (R.H. DRIVE AUTOMATIC TRANSMISSION)	11	11
ACCELERATOR CONTROLS (L.H. DRIVE AUTOMATIC TRANSMISSION)	12	12
AIR CLEANER	8	8
AIR CONDITIONING INSTALLATION	54	62
AUTOMATIC TRANSMISSION CONTROL	39	41
AUTOMATIC TRANSMISSION MOUNTING DETAILS	19	22
AUTOMATIC TRANSMISSION UNIT	18	20 & 21
BODY FITTINGS (STANDARD OR OVERDRIVE TRANSMISSION)	46	47-53
BODY FITTINGS (AUTOMATIC TRANSMISSION)	47	—
BODY PANELS	45	46
BODY SHELL	43	—
BODY UNDERFRAME	44	45
BRAKE CONTROLS	32	34
BRAKE VACUUM SERVO	29	31
CARBURETTERS AND PETROL FILTER	7	7
CLUTCH CONTROLS	14	14
CLUTCH UNIT	13	13
COOLING SYSTEM	40	42
CYLINDER BLOCK	1	1
CYLINDER HEAD	5	5
ELECTRICAL EQUIPMENT (STANDARD TRANSMISSION)	48	54-57
ELECTRICAL EQUIPMENT (OVERDRIVE TRANSMISSION)	49	—
ELECTRICAL EQUIPMENT (AUTOMATIC TRANSMISSION)	50	—
EXHAUST SYSTEM	41	43
FINAL DRIVE UNIT (OVERDRIVE TRANSMISSION)	23	26
FINAL DRIVE UNIT (STANDARD OR AUTOMATIC TRANSMISSION)	22	25
FRONT BRAKES	27	29
FRONT SUSPENSION	24	27
FUEL SYSTEM	42	44
GEARBOX (STANDARD TRANSMISSION)	15	15 & 16
GEARBOX (OVERDRIVE TRANSMISSION)	16	17 & 18
HANDBRAKE CONTROL	35	37
HEATER AND DEMISTER INSTALLATION	51	58 & 59
HYDRAULIC BRAKE PIPES (R.H. DRIVE CARS)	33	35
HYDRAULIC BRAKE PIPES (L.H. DRIVE CARS)	34	36
OIL CLEANER	3	3
OIL PUMP	2	2
OPTIONAL EXTRAS	55	—
OVERDRIVE UNIT	17	19
P.A. STEERING PUMP AND HYDRAULICS	37	39
P.A. STEERING UNIT	36	38
PROPELLER SHAFT (SEE REMARKS)	20	23
PROPELLER SHAFT (SEE REMARKS)	21	24
REAR BRAKES	28	30
REAR SUSPENSION	25	28
RESERVAC TANK (R.H. DRIVE CARS)	30	32
RESERVAC TANK (L.H. DRIVE CARS)	31	33
ROAD WHEELS	26	—
STEERING COLUMN	38	40
STEERING UNIT (STANDARD MANUAL)	36A	38A
STEERING UNIT (HIGH RATIO MANUAL)	36B	38B
TIMING GEAR	6	6
TOOL KIT	53	61
WATER PUMP	4	4
WINDSCREEN WASHER	52	60

INDEX TO PARTS

Description	Page No.	Plate
A		
"A" Post Capping	46–13	48
"A" Post Finishers	46–5	47
"A" Post Panel Assembly	45–4	46
Accelerator Bell Crank Lever	9–2 — 12–2	9–10–11–12
Accelerator Connecting Link	9–2 — 12–2	9–10–11–12
Accelerator Connecting Link Pivot Pin	9–2 — 12–2	9–10–11–12
Accelerator Control Rods	9–2 — 12–2	9–10–11–12
Accelerator Pedal	9–1 — 12–1	9–10–11–12
Accelerator Pedal Bracket	9–1 — 12–1	9–10–11–12
Accelerator Pedal Fulcrum Pin	9–1 — 12–1	9–10–11–12
Accelerator Pedal Pad	9–1 — 12–1	9–10–11–12
Accelerator Pedal Shaft	9–1 — 12–1	9–10–11–12
Accelerator Pedal Shaft Bearing	9–1 — 12–1	9–10–11–12
Accelerator Pedal Shaft Bracket	9–1 & 11–1	9 & 11
Accelerator Pedal Shaft Bush	9–1 & 11–1	9 & 11
Accelerator Pedal Shaft Operating Lever	9–2 — 12–1	9–10–11–12
Accelerator Pedal Shaft Roller	9–2 — 12–1	9–10–11–12
Accelerator Pedal Stop Screw	9–1 — 12–1	9–10–11–12
Accelerator Steady Bar	9–2 — 12–1	9–10–11–12
Air Cleaner Assembly	8–1	—
Air Cleaner Bracket	8–1	8
Air Cleaner Intake Hose	8–1	8
Air Cleaner Paper Element	8–1	8
Air Cleaner Shell Assembly	8–1	8
Air Collector	51–7	59
Air Conditioning Installation	54–1—54–7	62
Air Director Boxes	51–6	59
Air Director Box Remote Controls	51–7	59
Air Intake (Carburetters)	8–1	8
Alternator	48–1	54
Alternator Adjusting Strap	48–1	54
Alternator Bracket	48–1	54
Alternator Driving Belt	48–1	54
Alternator Pulley	48–1	54
Ammeter	48–6	55
Ammeter Strap	48–6	55
Armrest (Front Doors)	46–30	50
Armrest (Rear Doors)	46–38	51
Ash Tray (Console)	46–16	48
Ash Tray (Rear Door Armrest)	46–38	51
Automatic Transmission Case Assembly	18–1	20
Automatic Transmission Case Breather Assembly	18–1	20
Automatic Transmission Case Pressure Test Plug	18–1	20
Automatic Transmission Centre Support Assembly	18–4	20
Automatic Transmission Control Housing and Shaft Assembly	39–1	41
Automatic Transmission Control Indicator Arm	39–2	41
Automatic Transmission Control Indicator Arm Bracket	39–1	41
Automatic Transmission Control Indicator Arm Link	39–2	41
Automatic Transmission Control Linkage Grommets	39–1 & 39–2	41
Automatic Transmission Control Selector Lever	39–1	41
Automatic Transmission Control Selector Lever Gate	39–1	41
Automatic Transmission Control Switch Operating Link	39–2	41
Automatic Transmission Cover Sealing	47–1 & 47–2	—
Automatic Transmission Dipstick Assembly	19–2	22
Automatic Transmission Dipstick Tube Assembly	19–2	22
Automatic Transmission Dipstick Tube Clip	19–2	22
Automatic Transmission Dipstick Tube Support Bar	19–2	22
Automatic Transmission Extension Case Assembly	18–1	20
Automatic Transmission Extension Case Gasket	18–1	20

Description	Page No.	Plate
A—*Continued*		
Automatic Transmission Forward Sun Gear Assembly	18–4	20
Automatic Transmission Forward Sun Gear Shaft Sealing Rings	18–4	20
Automatic Transmission Forward Sun Gear Thrust Bearing	18–4	20
Automatic Transmission Forward Sun Gear Thrust Bearing Race	18–4	20
Automatic Transmission Front Clutch Assembly	18–3	—
Automatic Transmission Front Clutch Cylinder	18–3	20
Automatic Transmission Front Clutch Hub	18–3	20
Automatic Transmission Front Clutch Input Shaft	18–3	20
Automatic Transmission Front Clutch Input Shaft Snap Ring	18–3	20
Automatic Transmission Front Clutch Piston	18–3	20
Automatic Transmission Front Clutch Piston Sealing Rings	18–3	20
Automatic Transmission Front Clutch Plate Kit	18–8	—
Automatic Transmission Front Clutch Split Ring	18–3	20
Automatic Transmission Front Clutch Spring	18–3	20
Automatic Transmission Front Clutch Spring Snap Ring	18–3	20
Automatic Transmission Front Drum Assembly	18–3	20
Automatic Transmission Front Drum Brake Band	18–3	20
Automatic Transmission Front Drum Brake Band Operating Strut	18–3	20
Automatic Transmission Front Drum Needle Bearing	18–3	20
Automatic Transmission Front Pump Assembly	18–2	20
Automatic Transmission Front Pump Oil Seal	18–2	20
Automatic Transmission Front Pump Sealing Ring	18–2	20
Automatic Transmission Front Servo Assembly	18–4	—
Automatic Transmission Front Servo Body	18–4	20
Automatic Transmission Front Servo Operating Lever	18–4	20
Automatic Transmission Front Servo Operating Lever Pivot Pin	18–4	20
Automatic Transmission Front Servo Piston Assembly	18–4	20
Automatic Transmission Front Servo Piston 'O' Rings	18–4	20
Automatic Transmission Front Servo Piston Return Spring	18–4	20
Automatic Transmission Front Servo Piston Sleeve	18–4	20
Automatic Transmission Front Servo Piston Sleeve Sealing Ring	18–4	20
Automatic Transmission Front Servo Piston and Sleeve Snap Ring	18–4	20
Automatic Transmission Gasket Kit	18–7	—
Automatic Transmission Gear Control Cable	39–3	41
Automatic Transmission Gear Control Cable Abutment Brackets	39–3 & 39–4	41
Automatic Transmission Gear Control Cable Ball Joints	39–3	41
Automatic Transmission Gear Control Cable End Fitting	39–3 & 39–4	41
Automatic Transmission Gear Control Cable Grommet	39–4	41

INDEX TO PARTS

Description	Page No.	Plate
A—*Continued*		
Automatic Transmission Gear Control Cable Transfer Lever	39-2 & 39-3	41
Automatic Transmission Governor Assembly	18-6	20
Automatic Transmission Governor Body	18-6	20
Automatic Transmission Governor Cover Plate	18-6	20
Automatic Transmission Governor Inspection Cover Plate	18-1	20
Automatic Transmission Governor Inspection Cover Plate Gasket	18-1	20
Automatic Transmission Governor Locating Ball	18-6	20
Automatic Transmission Governor Snap Ring (Mainshaft)	18-6	20
Automatic Transmission Governor Spring	18-6	20
Automatic Transmission Governor Spring Retainer	18-6	20
Automatic Transmission Governor Valve	18-6	20
Automatic Transmission Governor Weight	18-6	20
Automatic Transmission Indicator Lighting Resistance	50-1	—
Automatic Transmission Kick-down Control Rod	18-6	21
Automatic Transmission Mainshaft Assembly	18-5	20
Automatic Transmission Mainshaft Bearing	18-2	20
Automatic Transmission Mainshaft Bearing Snap Ring	18-2	20
Automatic Transmission Mainshaft Ring Gear	18-5	20
Automatic Transmission Mainshaft Ring Gear Snap Ring	18-5	20
Automatic Transmission Manual Control Shaft	18-1	20
Automatic Transmission Manual Control Shaft Oil Seal	18-1	20
Automatic Transmission Manual Control Control Shaft Selector Lever	18-1	20
Automatic Transmission Manual Valve Detent Lever	18-1	20
Automatic Transmission Manual Valve Detent Lever Ball	18-1	20
Automatic Transmission Manual Valve Detent Lever Ball Spring	18-1	20
Automatic Transmission Oil Collector Sleeve	18-6	20
Automatic Transmission Oil Collector Sleeve Piston Rings	18-6	20
Automatic Transmission Oil Collector Tubes	18-6	20
Automatic Transmission Oil Filter Assembly	18-7	21
Automatic Transmission Oil Filter Clip	18-7	21
Automatic Transmission Oil Outlet Flexible Hose	19-2	22
Automatic Transmission Oil Outlet Pipe	19-2	22
Automatic Transmission Oil Outlet and Return Pipe Unions	18-1	20
Automatic Transmission Oil Pan Assembly	18-7	21
Automatic Transmission Oil Pan Gasket	18-7	21
Automatic Transmission Oil Return Flexible Hose	19-2	22
Automatic Transmission Oil Return Pipe	19-2	22
Automatic Transmission Oil Seal and 'O' Ring Kit	18-7	—
Automatic Transmission Oil Tubes	18-7	21
Automatic Transmission One-Way Clutch Assembly	18-4	20
Automatic Transmission One-Way Clutch Outer Race	18-4	20

Description	Page No.	Plate
A—*Continued*		
Automatic Transmission One-Way Clutch Outer Race Snap Ring	18-4	20
Automatic Transmission Parking Brake Forked Lever	18-1	20
Automatic Transmission Parking Brake Forked Lever Clip	18-1	20
Automatic Transmission Parking Brake Pawl	18-1	20
Automatic Transmission Parking Brake Pawl Link	18-1	20
Automatic Transmission Parking Brake Pawl Link Pin	18-1	20
Automatic Transmission Parking Brake Pawl Pivot Pin	18-1	20
Automatic Transmission Parking Brake Pawl Spring	18-1	20
Automatic Transmission Parking Brake Toggle Lever	18-1	20
Automatic Transmission Parking Brake Toggle Lever Ball Pin	18-1	20
Automatic Transmission Parking Brake Toggle Pin	18-1	20
Automatic Transmission Parking Brake Toggle Pin Retaining Plug	18-1	20
Automatic Transmission Parking Brake Torsion Lever	18-1	20
Automatic Transmission Parking Brake Torsion Lever Link	18-1	20
Automatic Transmission Parking Brake Torsion Lever Link Clip	18-1	20
Automatic Transmission Parking Brake Torsion Lever Spring	18-1	20
Automatic Transmission Piston Ring and Metal Sealing Ring Kit	18-8	—
Automatic Transmission Planetary Gears and Rear Drum Assembly	18-4	20
Automatic Transmission Propeller Shaft Flange	18-2	20
Automatic Transmission Rear Clutch and Front Drum Assembly	18-3	—
Automatic Transmission Rear Clutch Piston Assembly	18-3	20
Automatic Transmission Rear Clutch Piston Sealing Rings	18-3	20
Automatic Transmission Rear Clutch Plate Kit	18-8	—
Automatic Transmission Rear Clutch Plates Snap Ring	18-3	20
Automatic Transmission Rear Clutch Spring	18-3	20
Automatic Transmission Rear Clutch Spring Seat	18-3	20
Automatic Transmission Rear Clutch Spring Seat Snap Ring	18-3	20
Automatic Transmission Rear Drum Brake Band	18-5	20
Automatic Transmission Rear Drum Brake Band Anchor Strut	18-5	20
Automatic Transmission Rear Drum Brake Band Operating Strut	18-5	20
Automatic Transmission Rear Pump Assembly	18-5	20
Automatic Transmission Rear Pump Driving Key	18-5	20
Automatic Transmission Rear Pump Gasket	18-5	20
Automatic Transmission Rear Pump Gear Retaining Plate	18-5	20
Automatic Transmission Rear Pump Oil Inlet Tube	18-5	20
Automatic Transmission Rear Pump Oil Outlet Tube	18-5	20
Automatic Transmission Rear Pump Oil Tube 'O' Rings	18-5	20

INDEX TO PARTS

Description	Page No.	Plate
A—*Continued*		
Automatic Transmission Rear Servo Assembly	18–5	—
Automatic Transmission Rear Servo Body	18–5	20
Automatic Transmission Rear Servo Operating Lever	18–5	20
Automatic Transmission Rear Servo Operating Lever Shaft	18–5	20
Automatic Transmission Rear Servo Piston	18–5	20
Automatic Transmission Rear Servo Piston 'O' Ring	18–5	20
Automatic Transmission Rear Servo Piston Return Spring	18–5	20
Automatic Transmission Rear Servo Return Spring Plate	18–5	20
Automatic Transmission Rear Servo Return Spring Plate Snap Ring	18–5	20
Automatic Transmission Regulator Assembly	18–7	21
Automatic Transmission Speedometer Drive Gear	18–6	20
Automatic Transmission Speedometer Driven Gear	18–2	20
Automatic Transmission Speedometer Driven Gear Bearing	18–2	20
Automatic Transmission Speedometer Driven Gear Housing	18–2	20
Automatic Transmission Speedometer Driven Gear Housing Gasket	18–2	20
Automatic Transmission Speedometer Driven Gear Housing Oil Seal	18–2	20
Automatic Transmission Speedometer Driven Gear 'O' Ring	18–2	20
Automatic Transmission Speedometer Driven Gear Retaining Plate	18–2	20
Automatic Transmission Thrust Washer Kit	18–8	—
Automatic Transmission Torque Converter	18–1	20
Automatic Transmission Torque Converter Drive Plate	19–1	22
Automatic Transmission Torque Converter Housing	19–1	22
Automatic Transmission Torque Converter Housing Covers	19–1	22
Automatic Transmission Torque Converter Housing Stoneguards	19–1	22
Automatic Transmission Torque Converter Housing Support Brackets	19–1	22
Automatic Transmission Unit Rear Mounting Bracket	19–1	22
Automatic Transmission Unit Rear Mounting Spring	19–2	22
Automatic Transmission Valve Bodies Assembly	18–6	21
Automatic Transmission Valve Bodies Springs	18–6	—
B		
"B/C" Post Chrome Beads	46–40	52
"B/C" Post Draught Piping	46–27 & 46–35	—
"B/C" Post Upper Facia	46–14	48
"B/C" Post Finishers	46–41	52
"B/C" Post Panel Assembly	45–4	46
"B/C" Post Spacer	45–4	46
"B/C" Post Top Capping	46–14	48
"B/C" Post Trim Pads	46–14	48
"B/C" Post Trim Pad Capping	46–14	48
"B/C" Post Trim Panel	46–14	48
Backlight Glass	46–17	49
Backlight Glass (Electrically Heated)	46–18 & 55–2	—

Description	Page No.	Plate
B—*Continued*		
Backlight Glass Finishers	46–18	49
Backlight Glass Finisher Joint Piece	46–18	49
Backlight Glass Seal	46–18	49
Backlight Reinforcement Panels	45–5 & 45–6	46
Backlight Switch	55–2	—
Backlight Trim Panel	46–17	49
Battery	48–19	57
Battery Cables	48–20	—
Battery Fixing Rods	48–20	57
Battery Strap	48–20	57
Battery Tray	48–20	57
Battery Tray Drain Tube	48–20	57
Big End Bearings	1–3	1
Body Harness	48–20 & 48–21	—
Body Panel, Lower Rear Inner	44–5	45
Body Panel, Lower Rear Outer	45–9	46
Body Sealing Plugs	45–9	46
Body Shell	43–1 & 43–2	—
Body Side Assembly	45–3 & 45–4	—
Body Underframe Assembly	44–1	—
Bonnet Assembly	45–2	46
Bonnet Catch Base Plate	45–2	46
Bonnet Catch Peg	45–2	46
Bonnet Catch Return Spring	45–2	46
Bonnet Catch Safety Hook	45–2	46
Bonnet Catch Safety Hook Pivot Pin	45–2	46
Bonnet Catch Safety Hook Spring	45–2	46
Bonnet Catch Spacing Bush	45–2	46
Bonnet Catch Striker Plate	45–2	46
Bonnet Chrome Beads	46–39	52
Bonnet Hinges	45–2	46
Bonnet Insulating Pads	46–3	—
Bonnet Lock Control Wire	46–3	47
Bonnet Lock Reinforcement	44–3	45
Bonnet Rest Rubber	46–3	47
Bonnet Rubber Ruffers	46–3	—
Boot Floor Cross Member	44–4	45
Boot Floor Mat	46–19	49
Boot Floor Panels	44–4	45
Boot Floor and Spare Wheel Well Assembly	44–4	45
Boot Lamp	48–19	57
Boot Lid Aperture Reinforcement	44–5 & 44–6	45
Boot Lid Aperture Sealing Rubber	46–22	49
Boot Lid Assembly	45–8	46
Boot Lid Hinges	45–8	46
Boot Lid Hinge Attachment Bracket	45–9	46
Boot Lid Hinge Fixing Plates	44–4	—
Boot Lid Locks	46–21	49
Boot Lid Lock Control	46–21	49
Boot Lid Lock Release Mechanism	46–21	49
Boot Lid Lock Strikers	46–22	49
Boot Side Casings	46–21	49
Bottom Water Pipe	40–2	42
Brake Fluid Level/Handbrake Warning Lamp	48–8	55
Brake Fluid Level Indicator	33–1 & 34–1	35 & 36
Brake Fluid Low Pressure Hoses	33–1 & 34–1	35 & 36
Brake Fluid Reservoirs	33–1 & 34–1	35 & 36
Brake Fluid Reservoir Brackets	33–1 & 34–1	35 & 36
Brake Hydraulic Hoses	33–2 & 34–2	35 & 36
Brake Hydraulic Pipes	33–1 — 34–3	35 & 36
Brake Hydraulic Pipe 3-way Union	33–3 & 34–3	35 & 36

INDEX TO PARTS

Description	Page No.	Plate
B—*Continued*		
Brake Hydraulic Pipe 4-way Union	33–2 & 34–2	35 & 36
Brake Master Cylinder Push Rod	32–3	34
Brake Master Cylinder and Reaction Valve	32–2	34
Brake Master Cylinder Repair Kit	32–3	—
Brake Pedal	32–1	34
Brake Pedal Fibre Washer	32–1	34
Brake Pedal Housing	32–2	34
Brake Pedal Housing Gasket	32–2	34
Brake Pedal Pads	32–1 & 32–2	34
Brake Pedal Return Spring	32–1	34
Brake Pedal Shaft	32–2	34
Brake Pedal Stop Plate	32–1	34
Brake Servo	29–1	31
Brake Servo Bracket	29–1	31
Brake Servo Hoses	30–2 & 31–2	32 & 33
Brake Servo Pipes	30–2 & 31–2	32 & 33
Brake Servo Repair Kit	29–2	—
Brake Servo Reservac Check Valve	30–1 & 31–1	32 & 33
Brake Servo Reservac Hoses	30–1 — 31–2	32 & 33
Brake Servo Reservac Tank	30–1 & 31–1	32 & 33
Brake Servo Reservac Tank Stoneguard	30–1 & 31–1	32 & 33
Brake Servo Shield	29–1	31
Brake Servo Vacuum Hoses	30–1 — 31–2	32 & 33
Brake Servo Vacuum Pipes	30–2 & 31–1	32 & 33
Breather Hoses	5–4	5
Breather Housing	5–3	5
Breather Housing Gauze Filter	5–3	5
Breather Pipe	5–4	5
By-Pass Hose	40–2	42
C		
Cable Strapping	48–23	—
Camshafts	5–2	5
Camshaft Bearings	5–2	5
Camshaft Covers	5–3	5
Camshaft Sprockets	6–1	6
Cantrail Cappings	46–13 & 46–14	48
Cantrail Closing Panels	45–5	46
Cantrail Panels	45–5	46
Cantrail Trim Panel	46–16 & 46–17	49
Cantrail Trim Roll	46–16	49
Cap Screws	1–1	1
Carburetter Acceleration Jet	7–1	7
Carburetter Acceleration Needle	7–1	7
Carburetter Acceleration Solenoid	7–1	7
Carburetter Assembly	7–1 & 7–2	7
Carburetter Body	7–1 & 7–2	7
Carburetter Connecting Rod	7–3	7
Carburetter Float	7–1	7
Carburetter Float Chamber	7–1 & 7–2	7
Carburetter Float Chamber Lid	7–1 & 7–2	7
Carburetter Gaskets	7–3	7
Carburetter Insulator	7–3	7
Carburetter Jet Assembly	7–1	7
Carburetter Jet Bearing	7–1	7
Carburetter Jet Housing	7–1	7
Carburetter Jet Needle	7–1	7
Carburetter Needle and Seat	7–1	7
Carburetter Overflow Pipes	7–3	7
Carburetter Service Kits	7–3	—
Carburetter Slow Running Valve	7–2	7

Description	Page No.	Plate
C—*Continued*		
Carburetter Suction Chamber	7–1	7
Carburetter Suction Chamber Damper	7–1	7
Carburetter Throttle Lever	7–3	7
Carpets	46–41	53
Carpets (Automatic Transmission)	47–2	—
Carpet Fasteners	46–41	53
Carpet Felts	46–42	—
Carpet Felts (Automatic Transmission)	47–2	—
Chain Tensioner	6–2	6
Chain Tensioner Filter Gauze	1–1 & 6–2	1 & 6
Chain Tensioner Repair Kit	6–2	—
Change Speed Lever Grommet (Gearbox Cover)	46–5	47
Choke Thermostat	5–5	5
Cigar Lighter	48–8	55
Clips	48–23	—
Clock	48–7	55
Clock Battery	48–7	55
Clutch Flexible Hose	14–3	14
Clutch Housing	14–4	14
Clutch Housing Cover Plate	14–4	14
Clutch Housing Oil Seal	14–4	14
Clutch Housing Support Brackets	14–4	14
Clutch Hydraulic Pipes	14–2 & 14–3	14
Clutch Master Cylinder	14–2	14
Clutch Master Cylinder Repair Kit	14–2	—
Clutch Operating Fork	14–4	14
Clutch Operating Fork Shaft	14–4	14
Clutch Operating Rod	14–3	14
Clutch Operating Rod Adjuster	14–3	14
Clutch Pedal	14–1	14
Clutch Pedal Aperture Cover (Automatic Transmission)	14–2	—
Clutch Pedal Bush	14–1	—
Clutch Pedal Housing	14–1	14
Clutch Pedal Housing Gasket	14–1	14
Clutch Pedal Pads	14–1	14
Clutch Pedal Return Spring	14–1	14
Clutch Pedal Shaft	14–1	14
Clutch Slave Cylinder	14–3	14
Clutch Slave Cylinder Repair Kit	14–3	—
Clutch Unit	13–1	13
Connecting Rods	1–3	1
Connecting Rod Bearings	1–3	1
Connector Blocks	48–4	54
Console Assembly	46–15	48
Console Assembly (Automatic Transmission)	47–1	—
Control Box	48–3	54
Crankshaft	1–2	1
Crankshaft Damper	1–2	1
Crankshaft Oil Seals	1–1 — 6–3	1 & 6
Crankshaft Pulley	1–2	1
Crankshaft Thrust Washers	1–2	1
Cubby Box	46–12	48
Cubby Box Lamp	48–16	56
Cubby Box Lamp Insulator	48–16	—
Cubby Box Lamp Switch	48–16	56
Cubby Box Lid	46–12	48
Cubby Box Lid Lock	46–12	48
Cubby Box Quadrant	46–12	48
Cubby Box Lid Stop Plate	46–12	48
Cylinder Block	1–1	1
Cylinder Block Core Plugs	1–1	1
Cylinder Block Dowels	1–1	1
Cylinder Block Drain Tap	1–1	1
Cylinder Block Liner	1–1	—
Cylinder Head	5–1	5
Cylinder Head Core Plugs	5–1	5
Cylinder Head Gasket	5–1	5
Cylinder Head Oil Pipe	5–3	5
Cylinder Head Studs	1–1	1

INDEX TO PARTS

Description	Page No.	Plate
D		
"D" Post Closing Panel	45–5	46
"D" Post Panel	45–5	46
"D" Post Spacer	45–5	46
Dash Centre Assembly	44–3	45
Dash Side Panels	45–4	46
Decarbonising Gaskets Set	5–1	—
Decarbonising Seals Set	5–1	—
Demister Elbows	51–5	58
Demister Hoses	51–5	58
Demister Nozzles	51–5	58
Demister Outlet Seal (Heater Case)	51–1	58
Dipper Switch	48–13	56
Dipstick Adaptor Tube	1–1	1
Dipstick Retaining Clip	5–4	5
Direction Indicator/Headlamp Flasher Switch	38–2 & 48–17	40 & 56
Direction Indicator Switch Striker Drive Clip	38–3	40
Distributor	48–2	54
Distributor (Automatic Transmission)	50–1	—
Distributor Cap	48–2	54
Distributor Cap Brush and Spring	48–2	54
Distributor Condenser	48–2	54
Distributor Contact Set	48–2	54
Distributor Rotor	48–2	54
Distributor Sealing Ring	1–1	1
Distributor Suction Pipe	7–3 & 48–3	7 & 54
Distributor Suction Pipe Elbow	7–3 & 48–3	7 & 54
Distributor Vacuum Unit	48–2	—
Door Seal Retainers (on Sills)	45–5	46
Door Sill Panels	45–5	46
Door Stop Buffers	46–19	49
Drain Tap (Cylinder Block)	1–1	1
Drip Moulding	45–5	46
Drip Moulding Chrome Finishers	46–39	52
Drip Moulding Chrome Finisher Joint Piece	46–39	52
E		
Earth Cables	48–22	—
Electric Clock	48–7	55
Electric Clock Battery	48–7	55
Electrical Cables	48–21	—
Electrical Harnesses	48–20 & 48–21	—
Electrical Harnesses (Automatic Transmission)	50–2	—
Electrical Harnesses (Overdrive Transmission)	49–3	—
Engine Decarbonising Gaskets Set	5–1	—
Engine Decarbonising Seals Set	5–1	—
Engine Mounting Brackets	1–4	1
Engine Overhaul Gaskets Set	1–6	—
Engine Overhaul Seals Set	1–6	—
Exhaust Camshaft Flanged Plug	5–3	5
Exhaust Camshaft Oil Thrower	5–2	5
Exhaust Camshaft Sealing Ring	5–3	5
Exhaust Down Pipe	41–1	43
Exhaust Down Pipe Sealing Ring	5–4 & 41–1	5 & 43
Exhaust Flexible Pipe	41–1	43
Exhaust Heat Shields	41–1 & 43–3	—
Exhaust Manifolds	5–4	5
Exhaust Manifold Gaskets	5–4	5
Exhaust Manifold Sealing Ring	5–4 & 41–1	5 & 43
Exhaust Manifold Studs	5–1 & 5–4	5
Exhaust Pipe Clips	41–1 & 41–2	43
Exhaust Silencers	41–1 & 41–2	43

Description	Page No.	Plate
E—*Continued*		
Exhaust Silencer Rubber Mountings	41–2 & 41–3	43
Exhaust Tail Pipe Assembly	41–2	43
Exhaust Tail Pipe Extension	41–3	43
Exhaust Tail Pipe Rubber Mounting	41–3	43
F		
Facia Boards	46–11	48
Facia Board Brackets	46–11 & 46–12	48
Facia Board Crash Roll	46–12 & 46–13	48
Facia Board Crash Roll Brackets	46–13	48
Facia Reinforcement Panel	45–3	46
Fan	4–1	4
Fan Cowls	40–1	42
Fan Unit	4–1	4
Final Drive Unit Breather	22–1 & 23–1	25 & 26
Final Drive Unit Companion Flange	22–1 & 23–1	25 & 26
Final Drive Unit Crown Wheel and Pinion	22–1 & 23–1	25 & 26
Final Drive Unit Crown Wheel Lock Straps	22–1 & 23–1	25 & 26
Final Drive Unit Differential Adjusting Shims	22–1 & 23–1	25 & 26
Final Drive Unit Differential Bearings	22–1 & 23–1	25 & 26
Final Drive Unit Differential Case	22–2 & 23–2	25 & 26
Final Drive Unit Differential Friction Discs	22–2 & 23–2	25 & 26
Final Drive Unit Differential Friction Plates	22–2 & 23–2	25 & 26
Final Drive Unit Drive Shaft and Flange	22–1 & 23–1	25 & 26
Final Drive Unit Drive Shaft Bearings	22–1 & 23–1	25 & 26
Final Drive Unit Drive Shaft Bearing Shims	22–1 & 23–1	25 & 26
Final Drive Unit Drive Shaft Flange Oil Seal	22–1 & 23–1	25 & 26
Final Drive Unit Filler and Drain Plugs	22–1 & 23–1	25 & 26
Final Drive Unit Gear Carrier	22–1 & 23–1	25 & 26
Final Drive Unit Gear Carrier Cover	22–1 & 23–1	25 & 26
Final Drive Unit Half-Shaft Bolts	22–1 & 23–1	25 & 26
Final Drive Unit Pinion Bearings	22–1 & 23–1	25 & 26
Final Drive Unit Pinion Bearing Shims	22–1 & 23–1	25 & 26
Final Drive Unit Pinion Mate Gears	22–2 & 23–2	25 & 26
Final Drive Unit Pinion Mate Gear Shaft	22–2 & 23–2	25 & 26
Final Drive Unit Pinion Oil Seal	22–1 & 23–1	25 & 26
Final Drive Unit Side Gears	22–2 & 23–2	25 & 26
Final Drive Unit Side Gear Ring	22–2 & 23–2	25 & 26
Flasher Lens (Rear)	48–14 — 48–15	56
Flasher Unit	48–15	56
Flywheel	1–3	1
Fog Lamps	55–1	—
Fog Lamp Bulb	55–1	—
Fog Lamp Light Unit	55–1	—
Forward Luggage Floor	44–5	45
Front Brake Calipers	27–1	29

INDEX TO PARTS

Description	Page No.	Plate
F—*Continued*		
Front Brake Caliper Bleed Screw	27–1	29
Front Brake Caliper Pistons	27–1	29
Front Brake Caliper Seals Kit	27–1	—
Front Brake Caliper Shims	24–6 & 27–1	29
Front Brake Disc	27–1	29
Front Brake Disc Shields	27–1 & 27–2	29
Front Brake Friction Pad Kit	27–1	29
Front Brake Friction Pad Retaining Pin	27–1	29
Front Bumper Assembly	46–1	—
Front Bumper Bar	46–1	47
Front Bumper Brackets	46–1	47
Front Bumper Over-Rider	46–1	47
Front Bumper Over-Rider Beading	46–1	47
Front Cross Member	44–2	45
Front Cross Member Brace	44–2	45
Front Cross Member Closing Panel	44–2	45
Front Cross Member Cover Plate	46–2	47
Front Door Capping	46–15	48
Front Door Casing	46–30	50
Front Door Check Arm	45–6	46
Front Door Check Arm Guide Spring	45–6	46
Front Door Chrome Beads	46–40	52
Front Door Dovetail Plate	46–24	50
Front Door Draught Piping	46–27	—
Front Door Handle (Inside)	46–24	50
Front Door Handle (Outside)	46–24 & 46–40	50 & 52
Front Door Hinges	45–6	46
Front Door Lock	46–23	50
Front Door Lock Links	46–24	50
Front Door Lock Striker	46–24	50
Front Door No Draught Ventilator	46–29	50
Front Door Remote Control and Link Assembly	46–25	50
Front Door Safety Catch	46–25	50
Front Door Sealing Rubbers	46–28	50
Front Door Shell	45–6	46
Front Door Sill Tread Plates	46–6	47
Front Door Trim Roll	46–31	50
Front Door Weatherstrip	46–31	50
Front Door Window Frames	46–26	50
Front Door Window Frame Felt	46–27	50
Front Door Window Frame Seals	46–27	50
Front Door Window Glass	46–27	50
Front Door Window Regulator	46–25	50
Front Door Window Regulator Deflector Plate	46–26	50
Front Door Window Regulator Handle	46–26	50
Front Door Window Regulator Handle Escutcheon	46–26	50
Front Engine Mountings	1–4	1
Front Engine Mounting Brackets	1–4	1
Front Engine Mounting Support Brackets	1–5	1
Front Flasher Lamps	48–13 & 48–14	56
Front Flasher Lamp Bulb	48–13	—
Front Flasher Lamp Lens	48–13 & 48–14	56
Front Flasher Lamp Lens Gasket	48–13 & 48–14	56
Front Floor Assembly	44–3	45
Front Hub Assembly	24–5	—
Front Hub Bearings	24–5	27
Front Hub Cap	24–5 & 24–6	27
Front Hub Studs	24–5	—
Front Hub Water Deflector	24–4	27
Front Jacking Tubes	44–2	45
Front Number Plate Carrier	46–1	47
Front Seats	46–7	47
Front Seat Anchor Bracket	46–9	47
Front Seat Armrest	46–8	—
Front Seat Cushion	46–8	47

Description	Page No.	Plate
F—*Continued*		
Front Seat Slides	46–9	47
Front Seat Slide Controls	46–8	47
Front Seat Squab Rake Controls	46–9	47
Front Suspension Anti-Roll Bar	24–8	27
Front Suspension Anti-Roll Bar Bushes	24–8	27
Front Suspension Anti-Roll Bar Links	24–8	27
Front Suspension Anti-Roll Bar Link Pads	24–9	27
Front Suspension Assemblies	24–1	27
Front Suspension Bump Stops	24–1	27
Front Suspension Camber Shims	24–2	27
Front Suspension Coil Spring	24–3	27
Front Suspension Coil Spring Seat	24–3	27
Front Suspension Cross Member Assy.	24–1	27
Front Suspension Cross Member Rubber Mountings	24–1 & 24–2	27
Front Suspension Lower Ball Pin	24–4	27
Front Suspension Lower Ball Pin Gaiter	24–4	27
Front Suspension Lower Ball Pin Socket	24–4	27
Front Suspension Lower Ball Pin Spigot	24–4	27
Front Suspension Lower Wishbones	24–3	27
Front Suspension Lower Wishbone Bushes	24–3	27
Front Suspension Lower Wishbone Fulcrum Shaft	24–3	27
Front Suspension Rebound Stops	24–2	27
Front Suspension Shock Absorbers	24–4	27
Front Suspension Shock Absorber Bracket	24–4	27
Front Suspension Shock Absorber Rubber Buffers	24–4	27
Front Suspension Stub Axle Carrier	24–4	27
Front Suspension Stub Axle Shaft	24–5	27
Front Suspension Stub Axle Shaft Seal	24–5	27
Front Suspension Upper Ball Joints	24–3	27
Front Suspension Upper Ball Joint Gaiter	24–3	27
Front Suspension Upper Wishbone Assemblies	24–2	27
Front Suspension Upper Wishbone Fulcrum Shafts	24–2	27
Front Suspension Upper Wishbone Fulcrum Shaft Bushes	24–2	27
Front Suspension Upper Wishbone Levers	24–2	27
Front Timing Cover	1–1 & 6–3	1 & 6
Front Wings	45–1	46
Front Wing Baffles	45–1	46
Front Wing Diaphragm Seal Assembly	43–2 & 45–1	46
Front Wing Joining Panels	45–1	46
Front Wing Stay Brackets	45–1	46
Front Wing Valances	44–2	45
Front Wing Valance Extension Panel	44–2	45
Fuel Change-Over Switch	48–6	55
Fuse Box	48–4	54
Fuse Box Bracket	48–4	54
G		
Gearbox Access Cover Plate	46–5	—
Gearbox Breather	15–2 & 16–2	15 & 17
Gearbox Case	15–1 & 16–1	15 & 17
Gearbox Change-Speed Forks	15–2 & 16–1	15 & 17
Gearbox Change-Speed Lever	15–3 & 16–2	15 & 17
Gearbox Change-Speed Lever Bushes	15–3 & 16–2	15 & 17
Gearbox Change-Speed Lever Knob	15–3 & 16–2	15 & 17
Gearbox Constant Pinion Shaft	15–4 & 16–3	16 & 18
Gearbox Constant Pinion Shaft Ball Bearing	15–1 & 16–1	15 & 17

INDEX TO PARTS

Description	Page No.	Plate
G—*Continued*		
Gearbox Constant Pinion Shaft Ball Bearing Collar	15–1 & 16–1	15 & 17
Gearbox Constant Pinion Shaft Ball Bearing Clip	15–1 & 16–1	15 & 17
Gearbox Constant Pinion Shaft Roller Bearing	15–4 & 16–3	16 & 18
Gearbox Countershaft	15–4 & 16–4	16 & 18
Gearbox Countershaft Gear Unit	15–4 & 16–4	16 & 18
Gearbox Countershaft Needle Rollers	15–5 & 16–4	16 & 18
Gearbox Countershaft Thrust Washers	15–5 & 16–4	16 & 18
Gearbox Cover	46–5	47
Gearbox Drain Plug	15–1 & 16–1	15 & 17
Gearbox Filler Plug	15–1 & 16–1	15 & 17
Gearbox Mainshaft	15–3 & 16–3	16 & 18
Gearbox Mainshaft Ball Bearing	15–1 & 16–1	15 & 17
Gearbox Mainshaft Ball Bearing Circlip	15–1 & 16–1	15 & 17
Gearbox Mainshaft Gears	15–3 — 16–3	16 & 18
Gearbox Mainshaft Needle Rollers	15–3 — 16–3	16 & 18
Gearbox Oil Pump	15–1	15
Gearbox Operating Sleeves	15–3 — 16–3	16 & 18
Gearbox Operating Sleeve Thrust Members	15–3 — 16–3	16 & 18
Gearbox Rear End Cover	15–1	15
Gearbox Rear End Cover Oil Seal	15–1	15
Gearbox Remote Control	15–2 & 16–1	15 & 17
Gearbox Reverse Idler Gear	15–4 & 16–3	16 & 18
Gearbox Reverse Idler Gear Lever	15–4 & 16–3	16 & 18
Gearbox Reverse Slipper	15–4 & 16–3	16 & 18
Gearbox Reverse Spindle	15–4 & 16–3	16 & 18
Gearbox Selector Lever	15–3 & 16–2	15 & 17
Gearbox Selector Lever Bush	15–3 & 16–2	15 & 17
Gearbox Selector Lever Pivot Jaw	15–2 & 16–2	15 & 17
Gearbox Selector Lever Pivot Jaw Bush	15–2 & 16–2	15 & 17
Gearbox Striking Rods	15–2 & 16–1	15 & 17
Gearbox Striking Rod Locating Arm	15–2 & 16–1	15 & 17
Gearbox Synchro Hubs	15–3 — 16–3	16 & 18
Gearbox Synchro Ring	15–3 — 16–3	16 & 18
Gearbox Top Cover	15–2 & 16–1	15 & 17
Gearbox Top Cover Gasket	15–2 & 16–1	15 & 17
Gearbox Universal Joint Flange	15–3	16
H		
Handbrake Assembly	35–1	37
Handbrake Cable	35–1	37
Handbrake Cable Abutment Bracket	35–1	37
Handbrake Cable Adjusting Nut	35–1	37
Handbrake Cable Trunnion	35–1	37

Description	Page No.	Plate
H—*Continued*		
Handbrake Lever	35–1	37
Handbrake Lever Shaft	35–1	37
Handbrake Lever Shaft Housing	35–1	37
Handbrake Mechanism	28–1 & 28–1	30
Handbrake Mechanism Adjusting Nut	28–1	30
Handbrake Mechanism Pawl	28–1	30
Handbrake Mechanism Protection Covers	28–2	30
Handbrake Mechanism Repair Kit	28–2	—
Handbrake Mechanism Retraction Plate	28–2	30
Handbrake Operating Levers	28–1 & 28–2	30
Handbrake Operating Lever Return Spring	35–1	37
Handbrake Pad Carriers	28–1 & 28–2	30
Handbrake Pad Carrier Bolt	28–2	30
Handbrake Warning Lamp	48–8	55
Handbrake Warning Lamp Bracket	48–8	55
Handbrake Warning Lamp Escutcheon	48–8	55
Handbrake Warning Lamp Switch	35–2 & 48–9	37 & 55
Handbrake Warning Lamp Switch Operating Bracket	35–2	37
Hazard Warning Control	48–21	—
Headlamp	48–9 — 48–12	—
Headlamp Bulb	48–9 — 48–11	—
Headlamp Dipper Switch	48–13	56
Headlamp Dipper Switch Rubber Cap	48–13	56
Headlamp Embellisher Rim	48–9 — 48–12	56
Headlamp Flasher Switch	38–2 & 48–17	40 & 56
Headlamp Gasket	48–9 — 48–12	56
Headlamp Light Unit	48–10 — 48–11	—
Headlamp Sealed Beam Unit	48–9 — 48–11	56
Head Lining	46–16	—
Heat Distributor Box (Rear Compartment)	51–8	59
Heater Adaptors	51–2 & 51–3	58
Heater Air Intake Seal	51–1	58
Heater Case	51–1	58
Heater Case Air Flap Seals	51–1	58
Heater Case Air Flap Spring	51–1	58
Heater Case Demister Outlet Seal	51–1	58
Heater Case Lid	51–1	58
Heater Case Seal (Dash)	51–1	58
Heater Control Cable	51–3 — 51–4	58
Heater Control Cable Clamp	51–4	58
Heater Control Cable Clip	51–4	58
Heater Control Cable End Fitting	51–6	59
Heater Control Knobs	51–6	59
Heater Control Lever	51–5	59
Heater Control Lever Escutcheon	51–5	59
Heater Control Lever Plate	51–6	59
Heater Control Reservac Tank	51–4	58
Heater Control Reservac Tank Check Valve	51–4	58
Heater Control Vacuum Control Box	51–4	59
Heater Control Vacuum Diaphragm	51–5	58
Heater Control Vacuum Hoses	51–4 & 51–5	58
Heater Fan	51–2	58
Heater Fan Switch	48–5	55
Heater Hoses	51–3	58
Heater Hose Clips	51–3	58
Heater Motor	51–1	58
Heater Motor Grommets	51–2	58

INDEX TO PARTS

Description	Page No.	Plate
H—*Continued*		
Heater Motor Housing	51–2	58
Heater Motor Resistance	51–1	—
Heater Motor Seal	51–2	58
Heater Pipes	51–2 — 51–3	58
Heater Pipe Elbows	51–3	58
Heater Pipe Fixings	51–3	58
Heater Radiator	51–1	58
Heater Radiator Seals	51–1	58
Heater Recirculation Door Rubber Seal	46–5	—
Heater Water Vacuum Valve	51–2	58
High Tension Leads	5–5	—
High Tension Lead Conduit	5–6	—
Horns	48–16	56
Horn Contact	38–2	40
Horn Contact Holder	38–2	40
Horn Contact Insulating Strip	38–2	40
Horn Earth Contact	38–2	40
Horn Mounting Bracket	48–16	—
Horn Push	48–17	56
Horn Relay	48–17	56
Horn Ring	48–17	56
Horn Ring Cover	48–17	56
Horn Slip Ring	38–2	40
Horn Slip Ring Cable	38–2	40
Horn Slip Ring Rotor	38–2	40
Hydraulic Brake Flexible Hoses	33–2 & 34–2	35 & 36
Hydraulic Brake Pipes	33–1 — 34–3	35 & 36
Hydraulic Brake Pipe Clips	33–3 & 34–3	35 & 36
Hydraulic Brake 3-way Union	33–3 & 34–3	35 & 36
Hydraulic Brake 4-way Union	33–3 & 34–2	35 & 36
I		
Idler Sprocket	6–1	6
Idler Sprocket Eccentric Shaft	6–1	6
Ignition Barrel	48–5	55
Ignition Coil	48–2	54
Ignition Switch	48–5	55
Ignition Switch Adaptor Plate	48–5	55
Ignition Timing Pointer	1–4	1
Ignition Warning Lamp Control Unit	48–7	55
Inlet Camshaft Flanged Plug	5–3	5
Inlet Camshaft Seal	5–3	5
Inlet Camshaft Sealing Ring	5–3	5
Inlet Manifold	5–4	5
Inlet Manifold Gasket	5–4	5
Inlet Manifold Studs	5–1	5
Inner Steering Column	38–1	40
Inside Handle (Front Doors)	46–24	50
Inside Handle (Rear Doors)	46–32	51
Inside Handle Escutcheon (Front Doors)	46–26	50
Inside Handle Escutcheon (Rear Doors)	46–32	51
Instrument Board	46–10	48
Instrument Board Crash Roll	46–10	48
Instrument Panel Assembly	48–4	57
Insulating Felts	46–42 & 46–43	—
Insulating Felts (Automatic Transmission)	47–2	—
Insulators and Sleeves	48–23	—
Interior Lamps	46–17 & 48–19	49 & 57
Interior Lamp Door Switches	48–19	59
Interior Lamp Switch	48–19	57
Interior Trimming	46–43	—
Interior Mirror	46–5 & 48–19	47 & 57
Intermediate Cross Member	44–3	—
Intermediate Sprocket	6–1	6
Intermediate Sprocket Shaft	6–2	6

Description	Page No.	Plate
J		
Jack Strap	46–20	49
'Jaguar' Emblem	46–22	49
Jaguar Motif	46–39	52
K		
Key Fob	55–3	—
Kick-Down Cable	11–3 & 12–3	11 & 12
Kick-Down Control Rod	11–2 & 12–2	11 & 12
Kick-Down Relay Shaft	11–2 & 12–2	11 & 12
L		
Licence Holder	46–5	47
Locking Barrel (Front Door Handles)	46–24	—
Lock Remote Control (Front Doors)	46–25	50
Lock Remote Control (Rear Doors)	46–32 & 46–33	51
Longitudinal Stiffener ("A" Posts)	44–2	45
Loudspeaker Grille	46–15	48
Lower Steering Column Assembly	38–3 & 38–4	—
Lower Steering Column Coupling	38–3	40
Lower Steering Column Coupling Heat Shield	38–5	40
Lower Steering Column Journal	38–4	40
Lower Steering Column Sub-Assembly	38–3	40
Lower Steering Column Universal Joint	38–4	40
Lower Steering Column Stoneguards	36A–1 & 36B–1	38A & 38B
M		
Main Bearings	1–2	1
Map Lamp	48–18	56
Map Lamp Switch	48–6	55
Micro-Adjustment Plate	6–1	6
N		
No Draught Ventilator (Front Doors)	46–29	50
No Draught Ventilator (Rear Doors)	46–36	51
No Draught Ventilator Catch (Rear Doors)	46–37	51
No Draught Ventilator Catch Base (Rear Doors)	46–37	51
No Draught Ventilator Catch Bracket (Rear Doors)	46–36 & 46–37	51
No Draught Ventilator Hinge Plate (Rear Doors)	46–36	—
No Draught Ventilator Index Sleeve (Front Doors)	46–29	50
No Draught Ventilator Locking Handle (Front Doors)	46–29	50
No Draught Ventilator Sealing Rubber (Front Doors)	46–29 & 46–30	50
No Draught Ventilator Sealing Rubber (Rear Doors)	46–37	51
No Draught Ventilator Upper Pivot (Front Doors)	46–29	50
Number Plate Illumination Lamp	46–22 & 48–15	49 & 56
O		
Oil Cleaner	3–1	3
Oil Cleaner Element	3–1	3
Oil Delivery Pipe	2–1	2
Oil Filler Cap	5–3	5
Oil Gallery Plugs	1–1	1
Oil Pressure Gauge	48–6	55
Oil Pressure Gauge Element	48–6	55

INDEX TO PARTS

Description	Page No.	Plate
O—*Continued*		
Oil Pump	2–1	2
Oil Pump Cover	2–1	2
Oil Pump Drive Gear	2–1	2
Oil Suction Pipe	2–1	2
Oil Sump	1–3	1
Oil Sump Baffle and Oil Strainer Assy.	1–3	1
Oil Sump Dipstick	1–4	1
Oil Sump Drain Plug	1–3	1
Oil Sump Gasket	1–3	1
Oil Sump Hose	1–4 & 3–1	1 & 3
Oil Sump Pipe	1–4	1
Oil Sump Seals	1–3 & 6–3	1 & 6
Optional Extras	55–1 — 55–3	—
Outside Handle (Front Doors)	46–24 & 46–40	50 & 52
Outside Handle (Rear Doors)	46–32 & 46–40	51 & 52
Outside Handle Link (Front Doors)	46–24	50
Outside Handle Link (Rear Doors)	46–32	51
Overdrive Indicator Lighting Resistance	49–1	—
Overdrive Operating Switch	49–1	—
Overdrive Unit Accumulator Piston Assembly	17–2	19
Overdrive Unit Accumulator Piston Spring	17–2	19
Overdrive Unit Accumulator Piston Spring Retaining Plug	17–2	19
Overdrive Unit Adaptor Plate	17–1	19
Overdrive Unit Adaptor Plate Gasket	17–1	19
Overdrive Unit Annulus Assembly	17–3	19
Overdrive Unit Annulus Ball Bearings	17–3	19
Overdrive Unit Brake Ring	17–3	19
Overdrive Unit Clutch Sliding Member	17–3	19
Overdrive Unit Clutch Sliding Member Ball Bearing	17–3	19
Overdrive Unit Clutch Thrust Ring	17–3	19
Overdrive Unit Clutch Thrust Ring Plate	17–3	19
Overdrive Unit Clutch Thrust Ring Springs	17–3	19
Overdrive Unit Front Casing	17–1	19
Overdrive Unit Magnetic Ring	17–2	19
Overdrive Unit Main Operating Valve	17–1	19
Overdrive Unit Non-Return Valve Body	17–1	19
Overdrive Unit Non-Return Valve Kit	17–1	—
Overdrive Unit Oil Filter	17–2	19
Overdrive Unit Oil Filter Retaining Plug	17–2	19
Overdrive Unit Oil Pump Body	17–1	19
Overdrive Unit Oil Pump Cam	17–2	19
Overdrive Unit Oil Pump Plunger	17–1	19
Overdrive Unit Operating Pistons	17–2	19
Overdrive Unit Planetary Carrier	17–3	19
Overdrive Unit Propeller Shaft Flange	17–4	19
Overdrive Unit Rear Casing	17–4	19
Overdrive Unit Rear Casing Oil Seal	17–4	19
Overdrive Unit Solenoid	17–2	19
Overdrive Unit Solenoid Gasket	17–2	19
Overdrive Unit Solenoid Inspection Cover Gasket	17–2	19
Overdrive Unit Speedometer Driven Gear	17–4	19
Overdrive Unit Speedometer Driven Gear Bearing	17–4	19
Overdrive Unit Speedometer Driving Gear	17–4	19
Overdrive Unit Sun Wheel	17–3	19
Overdrive Unit Uni-Directional Clutch Cage	17–4	19
Overdrive Unit Uni-Directional Clutch Inner Member	17–4	19
Overdrive Unit Uni-Directional Clutch Rollers	17–4	19
Overdrive Unit Uni-Directional Clutch Thrust Washer	17–4	19

Description	Page No.	Plate
P		
Panel Lamp Switch	48–5	55
Parcel Shelf Cover Plates	43–3 & 44–4	—
Parcel Shelf Panel Assembly	44–4	45
Parcel Shelf Trim	46–18	49
Parcel Tray Assembly	46–6 & 46–7	47
Parcel Tray Assembly (Automatic Transmission)	47–1	—
Parcel Tray Crash Roll	46–7	47
Pedal Aperture Cover	43–2 & 44–3	—
Petrol Filler Boxes	44–6	45
Petrol Filler Cap	42–1	44
Petrol Filler Doors	45–8	46
Petrol Filler Door Stop	46–22	—
Petrol Filter	7–4 & 42–3	7 & 44
Petrol Gauge	48–6	55
Petrol Pipes	42–2 & 42–3	44
Petrol Pipe Assembly (Carburetters)	7–3 & 42–3	7 & 44
Petrol Pipe Clips	42–2 & 42–3	44
Petrol Pipe T-Piece	42–2	44
Petrol Pumps	42–2 & 48–3	44 & 54
Petrol Pump Clip	42–2 & 48–3	44
Petrol Pump Diaphragm Assembly	48–3	54
Petrol Pump Filter	48–3	54
Petrol Pump Rocker and Blade Assembly	48–3	54
Petrol Pump Rubber Mountings	42–2	44
Petrol Tanks	42–1	44
Petrol Tank Air Vent Connecting Tube	42–1	44
Petrol Tank Cradles	42–1 & 42–2	44
Petrol Tank Cradle Brackets	44–6	45
Petrol Tank Element Unit	42–1 & 48–6	44 & 55
Petrol Tank Element Unit Cover Plate	42–1	44
Petrol Tank Element Unit Locking Ring	42–1 & 48–6	44 & 55
Petrol Tank Element Unit Seal	42–1 & 48–6	44 & 55
Petrol Tank Filter	42–1	44
Petrol Tank Locating Pads	42–2	44
Petrol Tank Recess Panels	44–6	45
Pistons	1–3	1
Piston Rings	1–3	1
Plastic Plugs	45–9	46
Power-Assisted Steering Box	36–1 & 36–2	38
Power-Assisted Steering Box Alignment Washer	36–1	38
Power-Assisted Steering Box Ball Bearings	36–1	38
Power-Assisted Steering Box Cylinder End Plate	36–1	38
Power-Assisted Steering Box Drop Arm	36–1 & 36–2	38
Power-Assisted Steering Box Feed Pipe	36–1 & 36–2	38
Power-Assisted Steering Box Piston and Rack	36–1	38
Power-Assisted Steering Box Rack Adjusting Plug	36–1	38
Power-Assisted Steering Box Rack Thrust Pad	36–1	38
Power-Assisted Steering Box Seals Kits	36–2	—
Power-Assisted Steering Box Sector Shaft and Worm Follower	36–1 & 36–2	38
Power-Assisted Steering Box Shims	36–1	38
Power-Assisted Steering Box Top Cover	36–1 & 36–2	38

INDEX TO PARTS

Description	Page No.	Plate
P—*Continued*		
Power-Assisted Steering Box Top Cover Bleed Screw	36–1	38
Power-Assisted Steering Box Valve Housing	36–1 & 36–2	38
Power-Assisted Steering Box Valve and Worm	36–1 & 36–2	38
Power-Assisted Steering Hoses	37–2	39
Power-Assisted Steering Hose Bracket	37–2	39
Power-Assisted Steering Hose Clips	37–2	39
Power-Assisted Steering Oil Pump Adjusting Link	37–2	39
Power-Assisted Steering Oil Pump Assembly	37–1	—
Power-Assisted Steering Oil Pump Body	37–1	39
Power-Assisted Steering Oil Pump End Plate	37–1	39
Power-Assisted Steering Oil Pump Flow Control Valve	37–1	39
Power-Assisted Steering Oil Pump Mounting Bracket	37–1	39
Power-Assisted Steering Oil Pump Outlet Union	37–1	39
Power-Assisted Steering Oil Pump Pulley	37–2	39
Power-Assisted Steering Oil Pump Repair Kit	37–1	—
Power-Assisted Steering Oil Pump Reservoir	37–1	39
Power-Assisted Steering Oil Pump Seals Kit	37–1	—
Power-Assisted Steering Oil Pump Shaft	37–1	39
Power-Assisted Steering Oil Pump Vanes Kit	37–1	—
Propeller Shaft Assembly	20–1 & 21–1	—
Propeller Shaft Flange Bolts	20–1 & 21–1	23 & 24
Propeller Shaft Flange Yokes	20–1 & 21–1	23 & 24
Propeller Shaft Journals	20–1 & 21–1	23 & 24
Propeller Shaft Sleeve Yoke	20–1 & 21–1	23 & 24
Propeller Shaft Sleeve Yoke Gaiter	20–1	23
R		
Radiator Block	40–1	42
Radiator Block Drain Tap	40–1	42
Radiator Block Drain Tap Control Rod	40–1	42
Radiator Block Mounting Brackets	40–1	42
Radiator Block Mounting Pads	40–1	42
Radiator Brackets (Underframe)	44–2	—
Radiator Grille Aperture Reinforcement	45–1	46
Radiator Grille Assembly	46–1 & 46–2	47
Radiator Grille Badge	46–1	47
Radiator Grille Badge Housing	46–1	47
Radiator Grille Side Finishers	46–1	47
Radiator Grille Side Finisher Mesh	46–1	47
Radiator Grille Surround	46–1 & 46–2	47
Radiator Header Tank	40–1	42
Radiator Header Tank Filler Cap	40–1	42
Radiator Hoses	40–2 & 40–3	42
Radiator Seals	40–2	42
Radio Aperture Filler Panel	46–16	48
Radio Installation	55–1 — 55–2	—
Radio Loudspeaker Grille	46–15	48
Radio Mounting Plate	46–15	48
Radio Panel	46–15	48
Rear Brake Calipers	28–1	30
Rear Brake Caliper Adaptor Plate	28–1	30
Rear Brake Caliper Bleed Screw	28–1	30

Description	Page No.	Plate
R—*Continued*		
Rear Brake Caliper Bridge Pipe	28–1	30
Rear Brake Caliper Pistons	28–1	30
Rear Brake Caliper Seals Kit	28–1	—
Rear Brake Caliper Shims	28–1	30
Rear Brake Disc	28–2	30
Rear Brake Friction Pad Kit	28–1	30
Rear Brake Friction Pad Retaining Pin	28–1	30
Rear Bumper Assembly	46–23	—
Rear Bumper Bar	46–23	49
Rear Bumper Brackets	46–23	49
Rear Bumper Mounting Brackets (Underframe)	44–5 & 45–8	45 & 46
Rear Bumper Over-Riders	46–23	49
Rear Bumper Over-Rider Beading	46–23	49
Rear Bumper Rubber Mountings	46–23	49
Rear Compartment Heater Controls	51–7	59
Rear Compartment Heater Hose	51–8	59
Rear Cover (Cylinder Block)	1–1	1
Rear Cover Oil Seal	1–1	—
Rear Door Capping	46–15	48
Rear Door Casing	46–38	51
Rear Door Check Arm	45–7	46
Rear Door Check Arm Guide Spring	45–7	46
Rear Door Chrome Beads	46–40	52
Rear Door Dovetail Plate	46–31	51
Rear Door Draught Piping	46–35	—
Rear Door Handle (Inside)	46–32	51
Rear Door Handle (Outside)	46–32 & 46–40	51 & 52
Rear Door Hinges	45–7	46
Rear Door Hinge Shims	45–7	46
Rear Door Locks	46–31	51
Rear Door Lock Links	46–32	51
Rear Door Lock Striker	46–31 & 46–32	51
Rear Door No Draught Ventilator	46–36	51
Rear Door Remote Control and Link Assembly	46–32 & 46–33	51
Rear Door Rubber Buffers	46–19	49
Rear Door Safety Catch	46–33	51
Rear Door Sealing Rubbers	46–35 & 46–36	51
Rear Door Shell	45–7	46
Rear Door Sill Rubber Seal	46–36	51
Rear Door Sill Tread Plates	46–19	49
Rear Door Trim Roll	46–38	51
Rear Door Weatherstrip	46–38	51
Rear Door Window Frame	46–34	51
Rear Door Window Frame Felt	46–35	51
Rear Door Window Frame Seals	46–35	51
Rear Door Window Glass	46–34	51
Rear Door Window Regulator	46–33	51
Rear Door Window Regulator Handle	46–33	51
Rear Door Window Regulator Handle Escutcheon	46–34	51
Rear Engine Mounting Bracket	1–6 & 19–1	1 & 22
Rear Engine Mounting Bracket Centre Bush	1–6 & 19–1	—
Rear Engine Mounting Coil Spring	1–6 & 19–2	1 & 22
Rear Engine Mounting Coil Spring Retainer	1–6 & 19–2	1 & 22
Rear Engine Mounting Coil Spring Seat	1–6 & 19–1	1 & 22
Rear Flasher Lamp	48–14 — 48–15	—
Rear Flasher Lamp Bulb	48–14 — 48–15	—
Rear Flasher Lamp Lens	48–14 — 48–15	56
Rear Frame Brackets	44–5	45
Rear Hubs	25–2	28
Rear Hub Bearings	25–3	28
Rear Hub Bearing Spacers	25–3	28
Rear Hub Cap	25–2 & 25–3	28
Rear Hub Carrier	25–2	28

INDEX TO PARTS

Description	Page No.	Plate
R—*Continued*		
Rear Hub Carrier Fulcrum Shafts	25–2	28
Rear Hub Carrier Fulcrum Shaft Bearings	25–2	28
Rear Hub Carrier Fulcrum Shaft Seals	25–2	28
Rear Hub Carrier Grease Cap	25–2	28
Rear Hub Oil Seals	25–3	28
Rear Hub Oil Seal Seating Rings	25–3	28
Rear Hub Studs	25–2	—
Rear Hub Water Thrower	25–2	—
Rear Jacking Tubes	44–5	45
Rear Number Plate Illumination Lamp	46–22 & 48–15	49 & 56
Rear Number Plate Illumination Lamp Bulb	48–15	—
Rear Number Plate Panel Chrome Beading	46–22	49
Rear Number Plate Panel Plugs	46–22	49
Rear Quarter Trim Panels	46–19	49
Rear Seat Armrest	46–19	49
Rear Seat Cushion	46–18	49
Rear Seat Pan	44–3	—
Rear Seat Squab	46–19	49
Rear Seat Squab Support Panel	44–4	45
Rear Suspension Bump Stops	25–5	28
Rear Suspension Bump Stop Brackets	44–5 & 44–6	45
Rear Suspension Camber Shims	25–4	28
Rear Suspension Coil Springs	25–4	28
Rear Suspension Coil Spring Packing Ring	25–4	28
Rear Suspension Coil Spring Seats	25–4	28
Rear Suspension Cross Member	25–1	28
Rear Suspension Cross Member Bracing Plate	25–1	28
Rear Suspension Cross Member Rubber Mountings	25–1	28
Rear Suspension Half-Shafts	25–4	28
Rear Suspension Half-Shaft Joint Covers	25–4	28
Rear Suspension Half-Shaft Journals	25–4	28
Rear Suspension Half-Shaft Yokes	25–4	28
Rear Suspension Inner Fulcrum Shafts	25–1	28
Rear Suspension Inner Fulcrum Shaft Bearings	25–1	28
Rear Suspension Inner Fulcrum Shaft Mountings	25–1	28
Rear Suspension Inner Fulcrum Shaft Sealing Rings	25–1	28
Rear Suspension Radius Arms	25–5	28
Rear Suspension Radius Arm Safety Straps	25–5	28
Rear Suspension Shock Absorbers	25–4	28
Rear Suspension Shock Absorber Mounting Shaft	25–4	28
Rear Suspension Wishbones	25–1	28
Rear Wheel Arches	44–6	45
Rear Wheel Arch Trim Panels	46–19	49
Rear Wings	45–8	46
Reflex Reflector	48–14	56
Regulator Channel (Front Doors)	46–27	50
Regulator Channel (Rear Doors)	46–35	51
Rev. Counter	48–8	55
Reverse Lamp	48–15	56
Reverse Lamp Bulb	48–15	—
Reverse Lamp Housing	48–15	56
Reverse Lamp Lens	48–15	56
Reverse Lamp/Starter Cut-Out Switch (Automatic Transmission)	39–2 & 50–1	41
Reverse Lamp Switch (Gearbox)	15–2 — 48–16	15, 17, 56
Road Lamps Switch	48–5	55
Road Lamps Switch Escutcheon	48–5	55
Road Lamps Switch Lever	48–5	55
Road Lamps Switch Resistance	49–1 & 50–1	—
Road Wheels	26–1	—
Road Wheel Discs	26–2	—
Road Wheel Nave Plates	26–1	—

Description	Page No.	Plate
R—*Continued*		
Road Wheel Rimbellishers	26–1 & 26–2	—
Roof Panel	45–3	46
Roof Rear Trim Roll	46–17	49
Rubber Grommets	48–22	—
Rubber Plugs and Boots	48–22	—
S		
Scuttle Chrome Beads	46–39 & 46–40	52
Scuttle Side Casing	46–6	47
Scuttle Ventilator Gauze	45–3 & 46–6	46 & 47
Scuttle Ventilator Lid	45–3	46
Scuttle Ventilator Lid Seal	46–6	47
Scuttle Ventilator Water Shroud	46–6	—
Sealing Plugs	45–9	46
Seat Belts	55–2	—
Sidelamps	48–13	56
Sidelamp Bezel	48–13	56
Sidelamp Bulb	48–13	—
Sidelamp Warning Lamp (Italy only)	48–9	—
Side Members	44–2	45
Side Member Closing Plates	44–2	45
Side Member Filler Plates	44–2	45
Sill Intermediate Panel	44–4	45
Sill Panel (Inner)	44–3	—
Spare Wheel Clamp	46–20	49
Spare Wheel Clamp Tapped Boss	44–5	—
Spare Wheel Cover	45–9	46
Spare Wheel Cover Prop	45–9	46
Spare Wheel Well	44–4	45
Sparking Plugs	5–5	—
Sparking Plug Lead	5–5	—
Sparking Plug Lead Conduit	5–6	—
Sparking Plug Terminals	5–5	—
Speedometer	48–7	55
Speedometer (Automatic Transmission)	50–2	—
Speedometer (Overdrive Transmission)	49–1 — 49–2	—
Speedometer Driven Gear (Standard Transmission)	15–1	15
Speedometer Driving Gear (Standard Transmission)	15–3	16
Speedometer Flexible Cable	48–8	55
Speedometer Flexible Cable (Automatic Transmission)	50–2	—
Speedometer Flexible Cable (Overdrive Transmission)	49–2	—
Speedometer Flexible Cable Right-Angle Drive (Automatic Transmission)	50–2	—
Speedometer Flexible Cable Right-Angle Drive (Overdrive Transmission)	49–2	—
Speedometer Trip Mileage Remote Control	48–8	55
Stabilising Link	1–5	1
Stabilising Link Bearing Brackets	1–5	1
Stabilising Link Bush	1–5	1
Stabilising Link Rubber Mounting	1–5	1
Stabilising Link Stepped Washers	1–5	1
Starter Motor	48–2	54
Starter Motor Spigot Plate	48–2	54
Starter Motor Terminal Boot	48–22	—
Starter Solenoid Terminal Boot	48–22	—
Starter Switch	48–5	55
Starting Pipes	5–4	5
Steering Box	36A–1 & 36B–1	38A & 38B
Steering Box Cover Plate	36A–1 & 36B–1	38A & 38B
Steering Box End Plates	36A–1 & 36B–1	38A & 38B
Steering Box End Plate Oil Seal	36A–1 & 36B–1	38A & 38B

INDEX TO PARTS

Description	Page No.	Plate
S—*Continued*		
Steering Box Inner Column	36A–1 & 36B–1	38A & 38B
Steering Box Main Nut	36A–1 & 36B–1	38A & 38B
Steering Box Rockershaft	36A–1 & 36B–1	38A & 38B
Steering Column Aperture Cover Plate	43–2 & 44–3	—
Steering Column Cover Panels	46–7	47
Steering Column Cover Panels (Automatic Transmission)	47–1	—
Steering Column Lock and Ignition Switch	38–1 & 55–1	40
Steering Column Lower Mounting Bracket	38–1	40
Steering Column Screw Plate	38–1	40
Steering Column Switch Covers	38–3 & 48–17	40 & 56
Steering Column Switch Covers (Automatic Transmission)	39–1 & 50–1	41
Steering Column Switch Covers (Overdrive Transmission)	38–3 & 49–1	—
Steering Drop Arm	36A–1 & 36B–1	38A & 38B
Steering Idler Assembly	24–9 & 24–10	27
Steering Tie Rods	24–7 & 24–8	27
Steering Tie Rod Ball Joint Gaiters	24–7	—
Steering Tie Rod Ends	24–7 & 24–8	27
Steering Tie Rod Levers	24–6	27
Steering Tie Rod Pin and Bush	24–8	—
Steering Wheel	38–2	40
Steering Wheel Shaft	38–1	40
Steering Wheel Split Cone	38–1	40
Stop Lamp Switch	48–15	56
Stop/Tail/Flasher Lamps	48–14 — 48–15	56
Stop/Tail Lens	48–14 — 48–15	56
Stop/Tail Lamp Bulb Holder	48–14	56
Sun Visors	46–3 & 46–4	47
Sun Visor Friction Pivot	46–4	47
Switches	48–5 — 48–6	55
Switch Indicator Strip	48–5	55
Switch Indicator Strip Finisher	48–4	55
Switch Indicator Strip Light Filter	48–4	55
T		
Tacking Strips	46–10	—
Tail Panel	45–9	46
Tappet Guide	5–1	5
Terminal Post	48–20	57
Terminal Post Bracket	48–20	57
Thermostat	5–5	5
Throttle Lever (Intermediate)	7–4	7
Throttle Link (Intermediate)	7–4	7
Throttle Link Rod	7–5	7
Throttle Link Trunnion	7–5	7
Throttle Return Springs	7–4	7
Throttle Return Spring Anchor Bracket (Front Carburetter)	7–4	7
Throttle Return Spring Anchor Bracket (Oil Cleaner)	3–1 & 7–4	3 & 7
Throttle Return Spring Lever	7–3	7
Throttle Stop Bracket	7–4	7
Timing Chains	6–2	6
Timing Chain Dampers	6–2	6
Timing Chain Sprocket	1–2	1
Timing Cover	1–1 & 6–3	1 & 6
Timing Gear Brackets	6–1	6

Description	Page No.	Plate
T—*Continued*		
Tonneau Chrome Bead	46–40 & 46–41	52
Tonneau Panel	45–7	46
Tool Container Assembly	46–20 & 53–1	49 & 61
Tool Fixings	46–20 & 46–21	49
Tool Kit	53–1	61
Top Gear Switch (Overdrive)	16–1 & 49–2	17
Towing Bar Assembly	55–3	—
Two-Pin Plug and Socket	48–19	57
U		
Upper Steering Column	38–1	40
Upper Steering Column Bearings	38–1	40
Upper Steering Column Bearing Clamp	38–2	40
Upper Steering Column Locknut	38–1	40
Upper Steering Column Mounting Brackets	38–1	40
Upper Steering Column Screw Plate	38–1	40
Upper Timing Chain Retainer	6–2	6
V		
Valves	5–1 & 5–2	5
Valve Adjusting Pads	5–2	5
Valve Collars	5–2	5
Valve Cotters	5–2	5
Valve Guides	5–1	5
Valve Inserts	5–1	5
Valve Springs	5–2	5
Valve Tappets	5–2	5
Voltage Control Unit (Instrument Panel)	48–6	55
W		
Water Outlet Pipe	5–5	5
Water Pump	4–1	4
Water Pump Belt	4–1	4
Water Pump Belt Idler Pulley (Non-P.A. Steering)	6–3	6
Water Pump Belt Tensioner (Power-Assisted Steering)	6–4	—
Water Pump Impeller	4–1	4
Water Pump Pulley	4–1	4
Water Pump Seal	4–1	4
Water Pump Spindle	4–1	4
Water Temperature Gauge	48–6	55
Water Temperature Gauge Element	48–6	55
Window Frame (Front Doors)	46–26	50
Window Frame (Rear Doors)	46–34	51
Window Frame Felt (Front Doors)	46–27	50
Window Frame Felt (Rear Doors)	46–35	51
Window Glass (Front Doors)	46–27	50
Window Glass (Rear Doors)	46–34	51
Window Regulator (Front Doors)	46–25	50
Window Regulator (Rear Doors)	46–33	51
Window Regulator Handle (Front Doors)	46–26	50
Window Regulator Handle (Rear Doors)	46–33	51
Window Regulator Handle Escutcheon (Front Doors)	46–26	50
Window Regulator Handle Escutcheon (Rear Doors)	46–34	51
Window Weatherstrip	46–31 & 46–38	50 & 51
Windscreen Cappings	46–13	48
Windscreen Closing Panels	45–3	46
Windscreen Glass	46–4	47
Windscreen Glass Finishers	46–4 & 46–5	47
Windscreen Glass Seal	46–4	47
Windscreen Glass Seal Insert	46–4	47

INDEX TO PARTS

Description	Page No.	Plate
W—*Continued*		
Windscreen Header Panel	45–3	46
Windscreen Header Trim Panel ..	46–16	49
Windscreen Rails	45–3	46
Windscreen Washer	52–1	60
Windscreen Washer Bracket and Strap	52–1	60
Windscreen Washer Cover and Pump..	52–1	60
Windscreen Washer Filler Cap	52–1	60
Windscreen Washer Jet Assembly ..	52–1	60
Windscreen Washer Motor	52–1	60
Windscreen Washer Reservoir	52–1	60
Windscreen Washer Switch	48–5	55

Description	Page No.	Plate
W—*Continued*		
Windscreen Washer T-Piece	52–1	60
Windscreen Washer Tube	52–1	60
Windscreen Wiper Arms	48–18 — 48–19	57
Windscreen Wiper Blades	48–9	57
Windscreen Wiper Motor	48–18	57
Windscreen Wiper Outer Casings ..	48–18	57
Windscreen Wiper Rack and Crosshead	48–18	57
Windscreen Wiper Switch	48–5	55
Windscreen Wiper Wheelboxes ..	48–18	57
Wing Mirror	55–1	—

CYLINDER BLOCK

Part No.	Description	Plate No.	No. per Unit	Remarks
C.26447	**CYLINDER BLOCK ASSEMBLY**	1—1	1	
C.15867	**Plug** (Screwed) sealing hole in Oil Cleaner Flange		1	
C.16862/2	**Core Plug** (Small) at R.H. side of Cylinder Block		1	
C.16862/8	**Core Plug** (Large) at each side of Cylinder Block	1—2	6	
C.23920	**Blanking Plate,** at rear of Cylinder Block	1—3	1	
C.23975	**Gasket,** under Blanking Plate	1—4	1	
UFS.125/4R	**Screw,** Set, securing Blanking Plate to Cylinder Block		6	
FG.104/X	**Washer,** Spring, on Setscrews		6	
C.5022	**Plug** (Screwed) at R.H. side of Cylinder Block, sealing Heater Element Aperture		1	
C.2352	**Plug** (Screwed) at R.H. side of Cylinder Block, sealing Oil Gallery Apertures		6	
C.2296/3	**Washer** (Copper) on Plugs		6	
C.13479	**Dowel** (Small) locating Bearing Caps		7	
C.19340	**Dowel** (Large) locating Bearing Caps		7	
C.2262	**Bolt,** securing Main Bearing Caps to Cylinder Block		14	
C.8614/1	**Front Timing Cover**	1—5	1	
C.13479	**Dowel,** locating Timing Cover on front of Cylinder Block	1—6	2	
UFS.137/3R	**Screw,** Set, blanking Water Jet holes in Cylinder Block	1—7	5	
FW.106/E	**Washer** (Copper) on Setscrews	1—8	5	
C.17526	**Dipstick Adaptor Tube** (supplied loose with Cylinder Block)	1—9	1	
C.21690	**Cylinder Block Liner**		6	
C.2305	**Plug** (Screwed) in front end of Oil Gallery	1—10	1	
C.2157	**Headed Plug** (Screwed) in rear end of Oil Gallery	1—11	1	
C.2296/2	**Washer** (Copper) on Headed Plug	1—12	1	
C.13478	**Dowel,** locating Clutch Housing on rear face of Cylinder Block	1—13	2	
C.2269	**Stud** (Plain) fixing Cylinder Head to Cylinder Block	1—14	10	
C.23609	**Stud** (Plain) fixing Cylinder Head to Cylinder Block and mounting Engine Lifting Brackets	1—15	3	
C.23610	**Stud** (Dowel) fixing Cylinder Head to Cylinder Block and mounting Engine Lifting Brackets	1—16	1	
C.19687	**Cover Assembly,** on rear face of Cylinder Block	1—17	1	
C.19654	**Oil Seal** (Asbestos) inside Rear Cover		2	
C.2394	**Ring Dowel,** between Top and Bottom halves of Cover		2	
C.2470	**Cap Screw,** securing top and bottom halves of Cover together		2	
C.2373	**Ring Dowel,** locating Cover on Cylinder Block	1—18	2	
C.19686	**Cap Screw** (Centre) securing Cover to Cylinder Block	1—19	1	
C.19685	**Cap Screw** (Outer) securing Cover to Cylinder Block	1—20	2	
C.5846	**Banjo Bolt,** securing Oil Feed Pipe to Cylinder Block	1—21	1	
C.4146	**Washer** (Copper) on Banjo Bolt	1—22	2	
C.2430	**Sealing Ring,** in Distributor Aperture on Cylinder Block	1—23	1	
UFS.125/4R	**Screw,** Set, securing Distributor in Cylinder Block		1	
C.724	**Washer,** Shakeproof, on Setscrew		1	
FW.104/T	**Washer,** Plain, under Shakeproof Washer		1	
UFS.119/2R	**Plug,** in Distributor Drive Lubrication Aperture on Cylinder Block		1	
AW.102/E	**Washer** (Copper) on Plug		1	
C.21171	**Lockwasher,** on front, centre, and intermediate Bearing Cap Bolts		10	Fitted from Engine No. 7F.1001 to 7F.4466
C.21172	**Lockwasher,** on rear Bearing Cap Bolts		2	
C.28082	**Washer,** Plain, on Bearing Cap Bolts		12	Fitted to Engine No. 7F.4467 and subs.
C.13457	**FILTER GAUZE, IN CYLINDER BLOCK, BEHIND HYDRAULIC CHAIN TENSIONER**	1—24	1	
C.2354	**WATER DRAIN TAP AT L.H. SIDE OF CYLINDER BLOCK**	1—25	1	
C.2296/3	**Washer** (Copper) on Drain Tap	1—26	1	
C.316	**Washer** (Fibre) on Drain Tap	1—27	As req'd	

SECTION 1

CYLINDER BLOCK

Part No.	Description	Plate No.	No. per Unit	Remarks
C.23521/1	**CRANKSHAFT**	1—28	1	
C.23761	**Screwed Plug,** in Crankshaft Journals	1—29	6	
C.2226	**Bush,** in rear end of Crankshaft, for Gearbox Constant Pinion Shaft	1—30	1	**FOR CARS FITTED WITH STANDARD OR OVERDRIVE TRANSMISSION**
C.2316	**Thrust Washer,** at centre Bearing Cap (.091"/.093")	1—31	2	
C.2316/1	**Thrust Washer,** at centre Bearing Cap (.095"/.097")	1—31	2	**OVERSIZE THRUST WASHERS TO BE USED FOR SERVICE REPLACEMENTS IF REQUIRED**
10766	**MAIN BEARING KIT (STANDARD SIZE)**	1—32	1	
	Comprising:			
	C.25395 **Lower Main Bearing,** front and rear	2 halves		
	C.25399 **Lower Main Bearing,** intermediate	4 halves		
	C.25396 **Upper Main Bearing,** front and rear	2 halves		
	C.25398 **Upper Main Bearing,** intermediate	4 halves		
	C.25397 **Main Bearing,** centre	2 halves		
	MAIN BEARINGS are obtainable in the following undersizes:—			
	—.010" —.020" —.030" —.040"			
	When ordering, please quote Part No. and undersize required (e.g. 10766/20 for .020" undersize)			
C.24366	**CRANKSHAFT DAMPER ASSEMBLY**	1—33	1	Fitted from Engine No. 7F.1001 to 7F.1167
C.27295	**CRANKSHAFT DAMPER ASSEMBLY**		1	Fitted to Engine No. 7F.1168 and subs.
C.2466	**Cone,** for Damper Hub	1—34	1	
C.2173	**Distance Piece,** on Crankshaft, behind Damper	1—35	1	
C.23701	**Oil Thrower,** behind Distance Piece	1—36	1	
C.2170	**Sprocket,** for Timing Chain	1—37	1	
C.2314	**Gear,** for Oil Pump Drive	1—38	1	
C.757	**Key,** locking Cone to Damper Hub and Crankshaft, and Sprocket and Gear to Crankshaft	1—39	4	
C.23363	**PULLEY, ON CRANKSHAFT, FOR WATER PUMP BELT**	1—40	1	**NOT REQUIRED WHEN AIR CONDITIONING IS FITTED**
UFB.131/14R	**Bolt,** securing Pulley to Damper Hub	1—41	4	
C.725	**Washer,** Shakeproof, on Bolts	1—42	2	
C.23424	**Bolt,** securing Damper to Crankshaft	1—43	1	
C.2468	**Washer,** Special, on Bolt	1—44	1	
C.23158	**Tab Washer,** locking Bolt	1—45	1	

CYLINDER BLOCK

Part No.	Description	Plate No.	No. per Unit	Remarks
C.7917/2	**CONNECTING ROD (LESS BIG END BEARINGS)**	1—46	6	
C.17164	**Bearing,** Small End		6	
C.3944	**Bolt,** securing Caps to Connecting Rods		12	
C.2361	**Nut,** on Bolts		12	
L.103.5/8U	**Split Pin,** locking Nuts		12	
C.25400	**Bearing,** Big End (Standard Size)	1—47	12 halves	
	BIG END BEARINGS are obtainable in the following undersizes:— —.010″ —.020″ —.030″ —.040″			
	When ordering, please quote Part No. and undersize required (e.g. C.25400/20 for .020″ undersize)			
C.18517	**FLYWHEEL**	1—48	1	
C.2313	**Dowel,** in centre of Flywheel	1—49	2	
C.8631	**Dowel,** on outer face of Flywheel, locating Clutch Cover	1—50	3	**See also Clutch Unit**
C.4855	**Screw,** Set, securing Flywheel to Crankshaft	1—51	10	
C.4810	**Lockplate,** securing Setscrews	1—52	1	
C.26570	**PISTON, COMPLETE**	1—53	6	**8 : 1 COMPRESSION RATIO**
C.21707/1	**Pressure Ring,** upper (Chromium Plated)	1—54	6	
C.21708	**Pressure Ring,** lower	1—55	6	
C.21709	**Scraper Ring** (Maxiflex)	1—56	6	
C.13827	**Gudgeon Pin,** retaining Pistons to Connecting Rods	1—57	6	
C.3964	**Circlip,** retaining Gudgeon Pins in Pistons	1—58	12	
C.24086	**PISTON, COMPLETE**		6	**9 : 1 COMPRESSION RATIO**
	Individual items are as for Piston C.26570			
	PISTONS AND RINGS are obtainable in the following oversizes:— +.010″ +.020″ +.030″			
	When ordering, please quote Part No. and oversize required (e.g. C.24086/20 for .020″ oversize)			
C.24502	**OIL SUMP**	1—59	1	
C.19590	**Gasket,** between Oil Sump and Cylinder Block	1—60	2 halves	
C.24611/1	**Seal,** at front end of Oil Sump	1—61	1	
C.16315	**Seal** (Cork/Rubber) at rear end of Oil Sump	1—62	1	
C.23435	**Drain Plug,** for Oil Sump	1—63	1	
C.2296/1	**Washer** (Copper) on Drain Plug	1—64	1	
UFS.131/6R	**Screw,** Set, securing Oil Sump to Cylinder Block		23	
C.14170	**Screw,** Set, securing Oil Sump to Cylinder Block		1	
UFB.131/16R	**Bolt,** securing Oil Sump to Cylinder Block at rear		2	
C.725	**Washer,** Shakeproof, on Setscrews and Bolts		26	
C.25242	**BAFFLE AND OIL STRAINER ASSEMBLY, INSIDE OIL SUMP**	1—65	1	
UCS.131/5R	**Screw,** Set, securing Baffle to Oil Sump		4	
C.725	**Washer,** Shakeproof, on Setscrews		4	

SECTION 1

CYLINDER BLOCK

Part No.	Description	Plate No.	No. per Unit	Remarks
C.21622	**PIPE ASSEMBLY, AT R.H. SIDE OF OIL SUMP, FOR CONNECTION OF HOSE FROM OIL CLEANER**	1—66	1	
C.19869	**'O' Ring,** between Pipe Flange and Oil Sump	1—67	1	
C.16751	**Stud,** fixing Pipe	1—68	2	
UFN.131/L	**Nut,** on Studs		2	
FG.105/X	**Washer,** Spring, under Nuts		2	
C.19670	**HOSE FROM OIL CLEANER TO PIPE ON OIL SUMP**	1—69	1	
C.2905/14	**Clip,** securing Hose	1—70	2	
C.22910/1	**DIPSTICK ASSEMBLY FOR OIL SUMP**	1—71	1	
C.17585	**Washer** (Felt) on Dipstick	1—72	1	
C.23228	**IGNITION TIMING POINTER ON OIL SUMP**	1—73	1	
UCS.125/4R	**Screw** Set, securing Timing Pointer to front of Oil Sump		2	
C.724	**Washer,** Shakeproof, on Setscrews		2	
FW.104/T	**Washer,** Plain, under Shakeproof Washers		2	
C.11481	**BRACKET ASSEMBLY, FOR R.H. FRONT ENGINE MOUNTING**	1—74	1	**NOT REQUIRED WHEN POWER-ASSISTED STEERING IS FITTED**
C.26760	**BRACKET ASSEMBLY, FOR R.H. FRONT ENGINE MOUNTING**		1	**FOR USE WHEN POWER-ASSISTED STEERING IS FITTED**
C.11480	**BRACKET ASSEMBLY, FOR L.H. FRONT ENGINE MOUNTING**	1—75	1	
UFS.143/6R	**Screw,** Set, securing Engine Mounting Brackets to Cylinder Block		6	
C.727	**Washer,** Shakeproof, on Setscrews		6	
C.4794	**FRONT ENGINE MOUNTING (RUBBER)**	1—76	2	
UFS.150/7R	**Screw,** Set, securing Engine Mountings to Brackets on Cylinder Block		2	
FG.108/X	**Washer,** Spring, on Setscrews		2	
FW.108/T	**Washer,** Plain, under Spring Washers		2	
UFS.131/8R	**Screw,** Set, securing Engine Mountings to Support Brackets on Underframe		4	
UFN.131/L	**Nut,** on Setscrews		4	
FG.105/X	**Washer,** Spring, under Nuts		4	

CYLINDER BLOCK

Part No.	Description	Plate No.	No. per Unit	Remarks
C.11529	**R.H. SUPPORT BRACKET ASSEMBLY, ON BODY UNDERFRAME, FOR FRONT ENGINE MOUNTINGS**	1—77	1	
C.11528	**L.H. SUPPORT BRACKET ASSEMBLY, ON BODY UNDERFRAME, FOR FRONT ENGINE MOUNTINGS**	1—78	1	
UFB.131/30R	**Bolt,** securing Support Brackets to Body Underframe		4	NOT REQUIRED WHEN POWER-ASSISTED STEERING IS FITTED
UFS.131/6R	**Screw,** Set, securing Support Brackets to Body Underframe		4	
UFN.131/L	**Nut,** on Bolts and Setscrews		8	
FG.105/X	**Washer,** Spring, under Nuts		8	
C.26106	**Packing Piece,** under Support Bracket		1	FOR CARS EQUIPPED WITH POWER-ASSISTED STEERING. Fitted at R.H. side on R.H. Drive cars or at L.H. side on L.H. Drive cars.
UFB.131/32R	**Bolt,** securing Support Brackets to Body Underframe		2	FOR USE WHEN POWER-ASSISTED STEERING IS FITTED
UFB.131/30R	**Bolt,** securing Support Brackets to Body Underframe		2	
UFS.131/8R	**Screw,** Set, securing Support Brackets to Body Underframe		2	
UFS.131/6R	**Screw,** Set, securing Support Brackets to Body Underframe		2	
UFN.131/L	**Nut,** on Bolts and Setscrews		8	
FG.105/X	**Washer,** Spring, under Nuts		8	
C.12890	**STABILISING LINK AT REAR OF CYLINDER BLOCK**	1—79	1	
C.10940	**Bush,** in Stabilising Link	1—80	1	
UFB.143/14R	**Bolt,** securing Stabilising Link to Bearing Brackets		1	
C.8737/4	**Nut,** Self-Locking, on Bolt		1	
C.11607	**Stepped Washer,** on Stabilising Link, at top of Rubber Mounting	1—81	1	
C.11688	**Stepped Bush,** on Stabilising Link, at bottom of Rubber Mounting	1—82	1	
C.8667/3	**Nut,** Self-Locking, securing Stabilising Link to Rubber Mounting		1	
C.20218	**RUBBER MOUNTING FOR STABILISING LINK AT TOP**	1—83	1	
UFS.131/6R	**Screw,** Set, securing Rubber Mounting to Dash		2	
C.8667/2	**Nut,** Self-Locking, on Setscrews		2	
C.26143	**R.H. BEARING BRACKET, ON CLUTCH HOUSING, MOUNTING STABILISING LINK AT BOTTOM**	1—84	1	
C.26144	**L.H. BEARING BRACKET, ON CLUTCH HOUSING, MOUNTING STABILISING LINK AT BOTTOM**	1—85	1	
UCS.131/7R	**Screw,** Set, securing Bearing Brackets to Clutch Housing		4	
C.725	**Washer,** Shakeproof, on Setscrews		4	

SECTION 1

CYLINDER BLOCK

Part No.	Description	Plate No.	No. per Unit	Remarks
C.25943	**BRACKET ASSEMBLY FOR REAR ENGINE MOUNTING**	1—86	1	
C.12335	**Spring Seat** (Rubber) inside Bracket		1	
C.12265	**Centre Bush** (Rubber)		1	
UFB.131/10R	**Bolt,** securing Bracket to Body		4	
FG.105/X	**Washer,** Spring, on Bolts		4	
FW.105/T	**Washer,** Plain, under Spring Washers		4	
C.12027	**Packing Piece,** on Setscrews, between Bracket and Body	1—87	8	
C.19988	**COIL SPRING, FOR REAR ENGINE MOUNTING**	1—88	1	**FOR CARS FITTED WITH STANDARD OR OVERDRIVE TRANSMISSION**
C.12335	**Spring Seat** (Rubber) at top of Coil Spring	1—89	1	
C.21932	**Retainer,** at top of Coil Spring	1—90	1	
C.19276	**Pin Assembly,** securing Retainer to Gearbox and locating Support Bracket	1—91	1	
11349	**GASKETS SET FOR COMPLETE ENGINE OVERHAUL (SD.1155)**		1	
10527	**SEALS SET FOR COMPLETE ENGINE OVERHAUL (SD.1144)**		1	

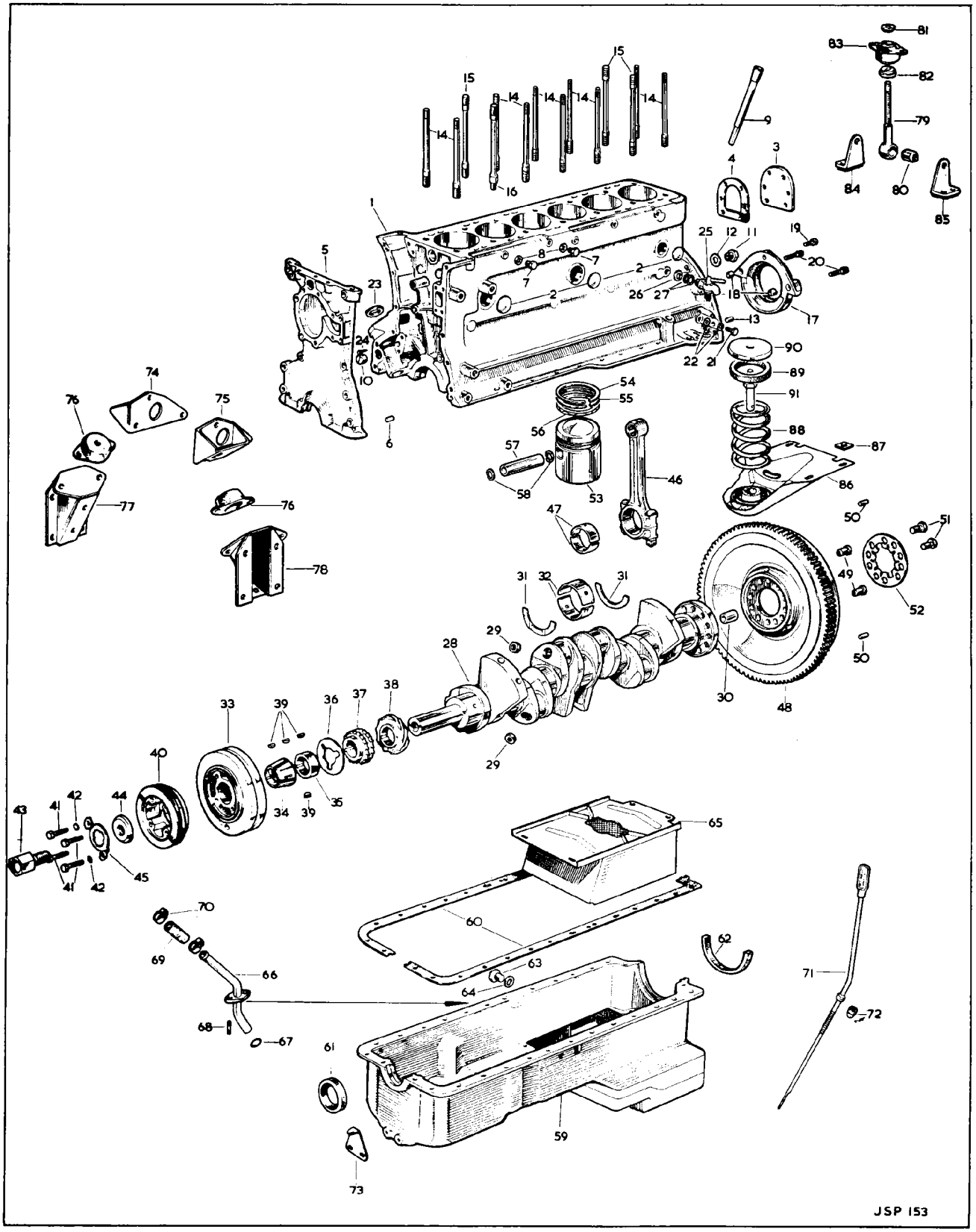

PLATE 1

SECTION 2

OIL PUMP

Part No.	Description	Plate No.	No. per Unit	Remarks
C.21765	**OIL PUMP COMPLETE (HE.6016)**		1	
C.17656	**Body only** (HE.4708)	2—1	1	
C.17664	**Rotor Assembly** (HE.4723) (Comprising Inner Rotor, Outer Rotor, Driving Shaft & Locking Pin)	2—2	1	
C.21759	**Cover,** at bottom of Oil Pump	2—3	1	
UCS.131/8R	**Screw,** Set, securing Cover	2—4	2	
UCB.131/14R	**Bolt,** securing Cover	2—5	2	
FG.105/X	**Washer,** Spring, on Setscrews and Bolts	2—6	4	
C.8649	**'O' Ring,** in Oil Pump Body	2—7	1	
C.21848	**'O' Ring,** in Oil Pump Cover	2—8	1	
C.8646	**Drive Shaft,** between Distributor and Coupling Shaft	2—9	1	
C.8647	**Bush,** on Drive Shaft	2—10	1	
C.2393	**Washer,** on Drive Shaft, at bottom of Bush	2—11	1	
C.2152	**Helical Gear,** driving Oil Pump and Distributor	2—12	1	
C.753	**Key,** locking Helical Gear to Drive Shaft	2—13	1	
UFN.256/L	**Nut,** at bottom of Drive Shaft	2—14	1	
C.2151	**Special Washer,** locking Nut	2—15	1	
C.8648	**Shaft,** coupling Driving Gear in Pump to Drive Shaft for Distributor	2—16	1	
C.9294	**Dowel Bolt,** securing Oil Pump to Front Bearing Cap	2—17	2	
UFB.131/18R	**Bolt,** securing Oil Pump to Front Bearing Cap	2—18	1	
C.7263	**Tab Washer,** locking Bolt	2—19	1	
C.22595	**OIL DELIVERY PIPE ASSEMBLY FROM PUMP TO CYLINDER BLOCK**	2—20	1	
C.22598	**Gasket,** between Delivery Pipe Flange and Cylinder Block	2—21	1	
UFS.131/8R	**Screw,** Set, securing Delivery Pipe to Cylinder Block		3	
C.22952	**Tab Washer,** locking Setscrews	2—22	1	
C.21982	**Strut,** on Front Intermediate Bearing Cap, supporting Oil Delivery Pipe	2—23	1	
C.6824	**Clip,** securing Oil Delivery Pipe to Strut	2—24	1	
UFS.125/5R	**Screw,** Set, through Clip		1	
C.3968/1	**Nut,** Self-Locking, on Setscrew		1	
FW.104/T	**Washer,** Plain, under Nut		1	
C.21762	**OIL SUCTION PIPE ASSEMBLY**	2—25	1	
C.21794	**Clip,** securing Suction Pipe to Struts	2—26	3	
C.21793	**Strut,** on Pump, supporting Suction Pipe	2—27	1	
C.21856	**Strut,** on Intermediate Bearing Cap, supporting Suction Pipe	2—28	1	
C.21855	**Strut,** on Rear Bearing Cap, supporting Suction Pipe	2—29	1	
UFS.125/5R	**Screw,** Set, through Clips		3	
C.3968/1	**Nut,** Self-Locking, on Setscrews		3	
FW.104/T	**Washer,** Plain, under Nuts		3	
C.21745	**Plate,** sealing bottom of Suction Pipe	2—30	1	
C.21744	**Spring,** behind Plate	2—31	1	
C.1221/4	**Split Pin,** retaining Plate and Spring on Suction Pipe	2—32	1	

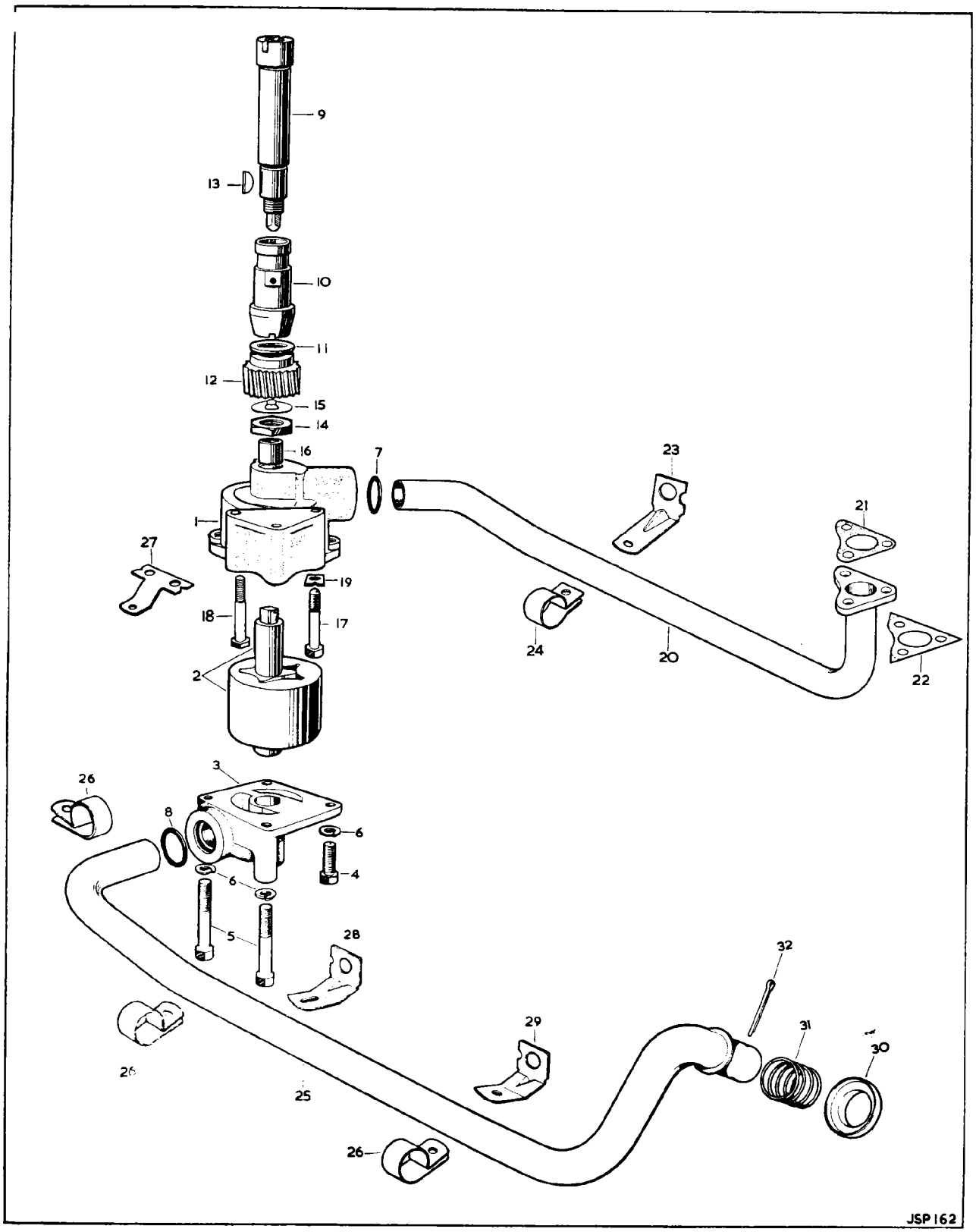
9
13
10
11
12
15
14
16
7
23
21
1
27
19
18
17
24
20
22
2
3
26
8
6
6
4
5
28
32
29
31
30
26
25
26
JSP162

PLATE 2

SECTION 3

OIL CLEANER

Part No.	Description	Plate No.	No. per Unit	Remarks
C.23066	**OIL CLEANER COMPLETE (FA.2122)**	3—1	1	
7984	**Canister Assembly** (125429)	3—2	1	
6159	**Spring,** at bottom of Canister (160441)	3—3	1	
6160	**Washer,** Plain, at top of Spring (174660)	3—4	1	
6161	**Washer** (Felt) under Pressure Plate (141251)	3—5	1	
6886	**Pressure Plate** (134477)	3—6	1	
7987	**Bolt,** through Canister (46357)	3—7	1	
6158	**Washer** (Rubber) under head of Bolt (137574)	3—8	1	
9674	**Spring Clip,** on Bolt (175012)	3—9	1	
11028	**Element** (Paper) (FP.3313)	3—10	1	
9348	**Anchor Insert** (105360)	3—11	1	
9667	**Clamping Plate,** on Filter Head (134061)	3—12	1	
6883	**Sealing Ring,** between Filter Head and Canister (137493)	3—13	1	
10160	**Filter Head** (41097)	3—14	1	
9664	**Balance Valve Assembly,** in Filter Head (50016)	3—15	1	
9665	**Seal,** under Head of Valve (137664)	3—16	1	
2714	**Relief Valve** (118261)	3—17	1	
8105	**Spring,** for Relief Valve (160698)	3—18	1	
8106	**Spider and Pin Assembly,** under Spring (44128)	3—19	1	
9663	**Adaptor,** retaining Relief Valve and for connection Hose to Oil Sump (105544)	3—20	1	
9662	**Seal,** under Adaptor (137665)	3—21	1	
C.20532	**Gasket,** between Oil Cleaner and Cylinder Block	3—22	1	
UFB.131/10R	**Bolt,** securing Oil Cleaner to Cylinder Block		1	
UFB.131/15R	**Bolt,** securing Oil Cleaner to Cylinder Block		3	
UFB.131/16R	**Bolt,** securing Oil Cleaner to Cylinder Block		1	
FW.105/E	**Washer** (Copper) on Bolts		4	
C.18065	**Bracket,** on Oil Cleaner Bolt, anchoring Throttle Return Spring	3—23	1	
C.26898	**Adaptor,** in Filter Head, for Oil Pressure Transmitter	3—24	1	
C.26899	**Washer** (Copper) on Adaptor	3—25	1	
C.19670	**HOSE, FROM OIL CLEANER TO PIPE ON OIL SUMP**	3—26	1	
C.2905/14	**Clip,** securing Hose	3—27	2	

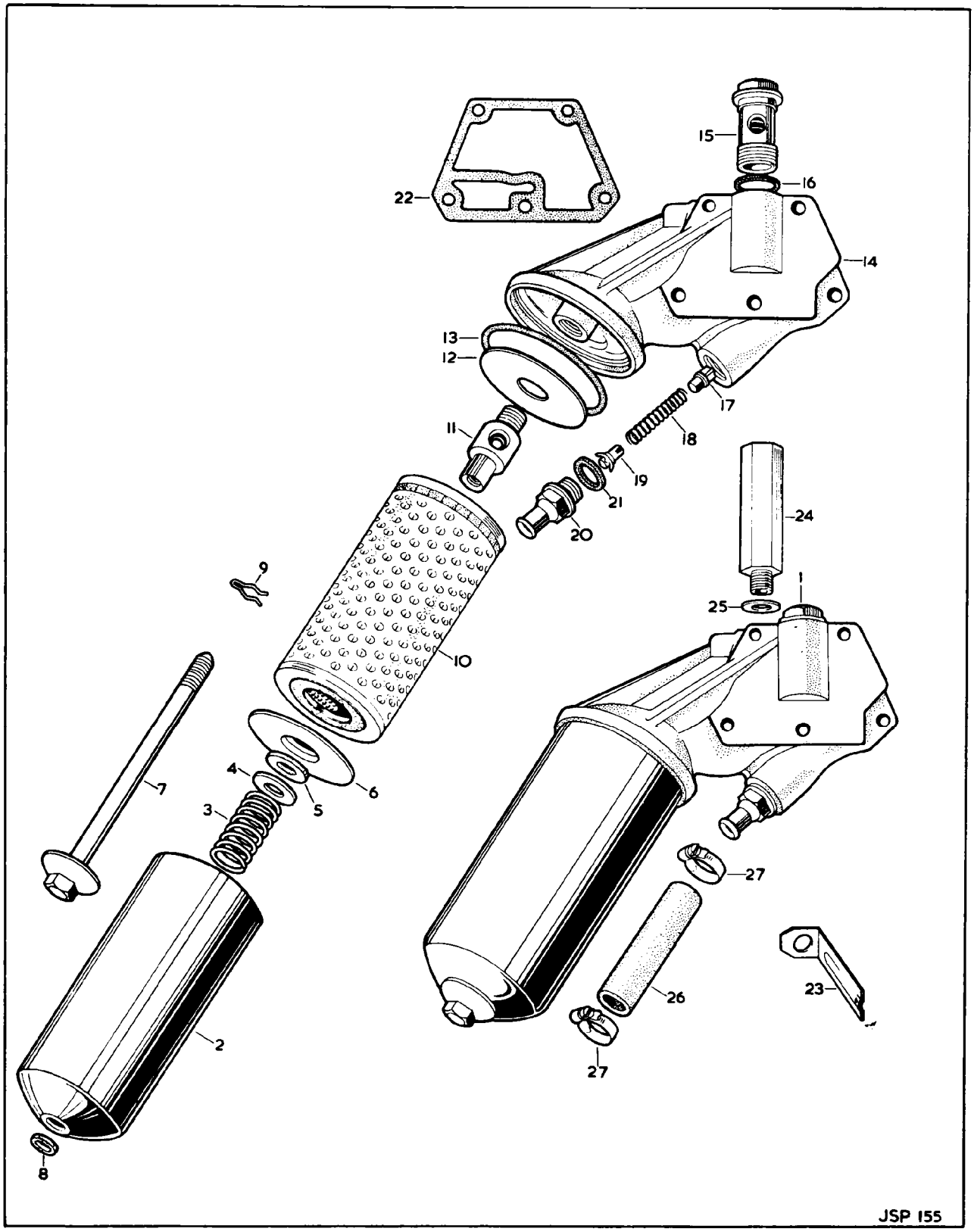
15
16
22
14
13
12
17
11
18
19
21
20
24
9
1
25
10
7
4
6
3
5
27
2
26
23
27
8
JSP 155

PLATE 3

SECTION 4

WATER PUMP

Part No.	Description	Plate No.	No. per Unit	Remarks
C.26711	**WATER PUMP COMPLETE**		1	
C.26709	**Body only**	4—1	1	
C.23417	**Spindle,** complete with Bearing	4—2	1	
C.23128	**Screw,** retaining Bearing in Pump Body	4—3	1	
UFN.225/L	**Nut,** locking Screw	4—4	1	
C.6773	**Seal,** on long end of Spindle, adjacent to Thrower	4—5	1	
C.8256	**Thrower,** on long end of Spindle, adjacent to Bearing	4—6	1	
C.22798	**Impeller**	4—7	1	
C.26852	**Adaptor,** for By-Pass Hose	4—8	1	
C.2296/2	**Washer** (Copper) on Adaptor	4—9	1	
C.23132	**Fan Pulley**	4—10	1	
C.16751	**Stud,** in Fan Pulley, for Automatic Fan Unit	4—11	4	
C.2303	**Gasket,** between Water Pump and Front Timing Cover	4—12	1	
C.25640	**FAN ASSEMBLY FOR WATER PUMP**	4—13	1	
UFN.131/L	**Nut,** securing Fan to Studs on Automatic Fan Unit		4	
FG.105/X	**Washer,** Spring, under Nuts		4	
C.23693	**AUTOMATIC FAN UNIT**	4—14	1	
UFN.131/L	**Nut,** securing Automatic Fan Unit to Fan Pulley		4	
C.740	**Washer,** Shakeproof, under Nuts		4	
C.26980	**BELT, DRIVING WATER PUMP**		1	**NOT REQUIRED WHEN POWER-ASSISTED STEERING IS FITTED**
C.23344	**BELT, DRIVING WATER PUMP AND OIL PUMP FOR POWER ASSISTED STEERING**	4—15	1	**REQUIRED WHEN POWER-ASSISTED STEERING IS FITTED**

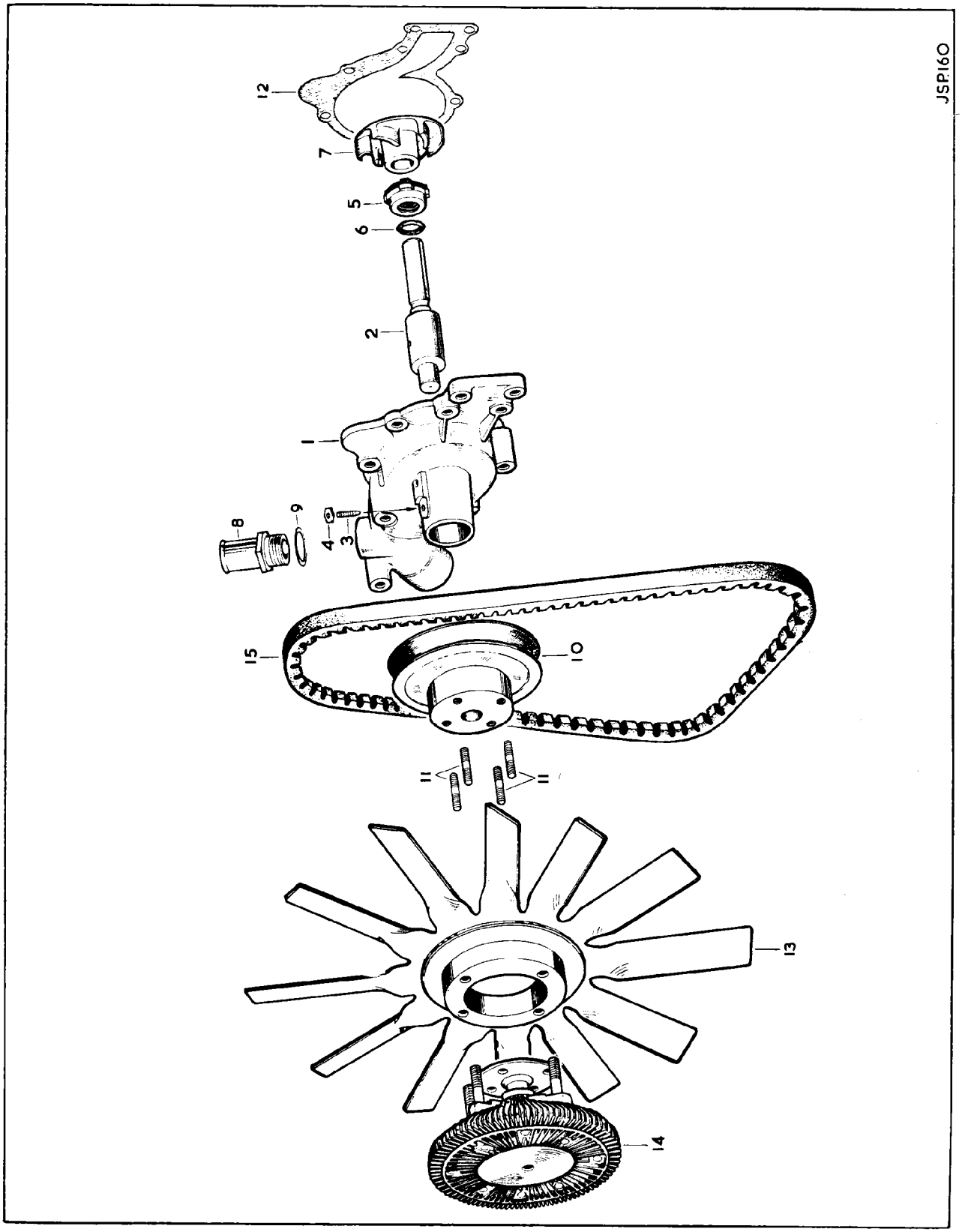

PLATE 4

CYLINDER HEAD

Part No.	Description	Plate No.	No. per Unit	Remarks
11346	**CYLINDER HEAD ASSEMBLY COMPLETE (SD.1152)**		1	
	(Comprising: Cylinder Head, Valves, Valve Guides, Springs, Tappets, Tappet Guides, Adjusting Pads, Camshafts, Camshaft Covers, Filler Cap, etc.)			
C.26202/1	**CYLINDER HEAD ASSEMBLY**	5—1	1	
C.2326	**Stud,** in Cylinder Head, fixing Camshaft Bearing Caps and Camshaft Covers	5—2	16	
C.2373	**Ring Dowel,** on Studs	5—3	16	
UFN.131/L	**Nut,** securing Camshaft Bearing Caps		16	
FG.105/X	**Washer,** Spring, under Nuts		16	
FW.105/T	**Washer,** Plain, under Spring Washers		16	
C.317	**Core Plug,** in Exhaust Face of Cylinder Head		2	
C.2157	**Core Plug** (Headed) at top of Cylinder Head	5—4	3	
C.2296/2	**Washer** (Copper) on Headed Core Plugs	5—5	3	
C.26198	**Guide,** for Inlet Valve	5—6	6	**1st. Oversize**
C.26195	**Guide,** for Exhaust Valve		6	**1st. Oversize**
C.26198/1	**Guide,** for Inlet Valve	5—6	6	**2nd. Oversize**
C.26195/1	**Guide,** for Exhaust Valve		6	**2nd. Oversize**
C.26199	**Circlip,** retaining Valve Guides	5—7	12	
C.12507	**Insert,** for Inlet Valve	5—8	6	
C.9865	**Insert,** for Exhaust Valve		6	
C.7262	**Guide,** for Tappets	5—9	12	
C.27081	**Gasket,**between Cylinder Head and Cylinder Block	5—10	1	
C.2189	**Stud** (Short) fixing Cylinder Head to Front Timing Cover and Cylinder Block	5—11	4	
UFN.131/L	**Nut,** on Studs		4	
FW.105/E	**Washer** (Copper) under Nuts, at fixing to Front Timing Cover		2	
FG.105/X	**Washer,** Spring, under Nuts, at Fixing to Cylinder Block		2	
C.2325	**Stud,** in Cylinder Head, fixing Exhaust Manifolds	5—12	14	**12 REQUIRED WHEN AIR CONDITIONING IS FITTED**
C.7624	**Stud,** in Cylinder Head, fixing Exhaust Manifolds and Dipstick Clip	5—13	2	
UFN.131/Q	**Nut** (Bronze) securing Exhaust Manifolds to Cylinder Head		16	
FG.105/X	**Washer,** Spring, under Nuts		16	
C.11761	**Stud,** in Cylinder Head, fixing Inlet Manifold	5—14	18	
UFN.131/L	**Nut,** on Studs		18	
FG.105/X	**Washer,** Spring, under Nuts		18	
C.6727/1	**Stud,** at front end of Cylinder Head, fixing Camshaft Covers	5—15	6	
C.6727	**Stud,** in front face of Cylinder Head, fixing Breather Housing	5—16	4	
C.2328	**Dome Nut,** securing Cylinder Head to Cylinder Block		14	
C.23607	**Engine Lifting Bracket**	5—17	2	
C.10301	**Washer,** Special, under Dome Nuts		4	**6 required when Automatic Transmission is fitted.**
FW.207/T	**Washer,** Bevelled, under Dome Nuts		8	
11348	**GASKETS SET FOR DECARBONISING ENGINE (SD.1154)**		1	
10525	**SEALS SET FOR DECARBONISING ENGINE (SD.1142)**		1	
C.12444	**INLET VALVE**	5—18	6	

SECTION 5

CYLINDER HEAD

Part No.	Description	Plate No.	No. per Unit	Remarks
C.21942	**EXHAUST VALVE**	5—19	6	
C.7137	**VALVE SPRING, INNER**	5—20	12	
C.7136	**VALVE SPRING, OUTER**	5—21	12	
C.2181	**Seat,** for Valve Springs	5—22	12	
C.2159	**Collar,** at top of Valve Springs	5—23	12	
C.430	**Cotter,** retaining Collar to Valve Stems	5—24	24	
C.7213/1	**TAPPET**	5—25	12	
	VALVE ADJUSTING PADS			
C.2243/A	**Adjusting Pad** (.085″ thick)	5—26	12	SELECTIVE SIZES
C.2243/B	**Adjusting Pad** (.086″ thick)	5—26	12	
C.2243/C	**Adjusting Pad** (.087″ thick)	5—26	12	
C.2243/D	**Adjusting Pad** (.088″ thick)	5—26	12	
C.2243/E	**Adjusting Pad** (.089″ thick)	5—26	12	
C.2243/F	**Adjusting Pad** (.090″ thick)	5—26	12	
C.2243/G	**Adjusting Pad** (.091″ thick)	5—26	12	
C.2243/H	**Adjusting Pad** (.092″ thick)	5—26	12	
C.2243/I	**Adjusting Pad** (.093″ thick)	5—26	12	
C.2243/J	**Adjusting Pad** (.094″ thick)	5—26	12	
C.2243/K	**Adjusting Pad** (.095″ thick)	5—26	12	
C.2243/L	**Adjusting Pad** (.096″ thick)	5—26	12	
C.2243/M	**Adjusting Pad** (.097″ thick)	5—26	12	
C.2243/N	**Adjusting Pad** (.098″ thick)	5—26	12	
C.2243/O	**Adjusting Pad** (.099″ thick)	5—26	12	
C.2243/P	**Adjusting Pad** (.100″ thick)	5—26	12	
C.2243/Q	**Adjusting Pad** (.101″ thick)	5—26	12	
C.2243/R	**Adjusting Pad** (.102″ thick)	5—26	12	
C.2243/S	**Adjusting Pad** (.103″ thick)	5—26	12	
C.2243/T	**Adjusting Pad** (.104″ thick)	5—26	12	
C.2243/U	**Adjusting Pad** (.105″ thick)	5—26	12	
C.2243/V	**Adjusting Pad** (.106″ thick)	5—26	12	
C.2243/W	**Adjusting Pad** (.107″ thick)	5—26	12	
C.2243/X	**Adjusting Pad** (.108″ thick)	5—26	12	
C.2243/Y	**Adjusting Pad** (.109″ thick)	5—26	12	
C.2243/Z	**Adjusting Pad** (.110″ thick)	5—26	12	
C.14985	**INLET CAMSHAFT**	5—27	1	
C.13081	**EXHAUST CAMSHAFT**	5—28	1	
C.2288	**Bearing,** for Camshafts	5—29	16 halves	
C.2324	**OIL THROWER, AT REAR END OF EXHAUST CAMSHAFT**	5—30	1	
UFS.137/4R	**Screw,** Set, securing Oil Thrower to Exhaust Camshaft	5—31	1	
FW.106/E	**Washer** (Copper) on Setscrew	5—32	1	

CYLINDER HEAD

Part No.	Description	Plate No.	No. per Unit	Remarks
C.19043	**FLANGED SEALING PLUG, L.H., AT REAR OF CYLINDER HEAD**	5—33	1	
C.19044	**'O' Ring,** on Flanged Sealing Plug	5—34	1	
UCS.125/5R	**Screw,** Set, securing Flanged Sealing Plug		2	
FW.104/E	**Washer** (Copper) on Setscrews		2	
C.14991	**SEAL, BETWEEN REAR BEARING CAP AND INLET CAMSHAFT COVER**	5—35	1	
C.26773	**FLANGED SEALING PLUG, R.H., AT REAR OF CYLINDER HEAD**	5—36	1	
C.14990	**'O' Ring,** on Sealing Plug	5—37	1	
UCS.125/5R	**Screw,** Set, securing Flanged Plug		2	
FW.104/E	**Washer** (Copper) on Setscrews		2	
UFS.137/4R	**Screw,** Set, in rear end of Inlet Camshaft	5—38	1	
FW.106/E	**Washer** (Copper) on Setscrew	5—39	1	
C.27497	**COVER FOR INLET CAMSHAFT**	5—40	1	
C.14988/1	**Gasket,** between Inlet Camshaft Cover and Cylinder Head	5—41	1	
C.27277	**COVER FOR EXHAUST CAMSHAFT**	5—42	1	
C.6735/1	**Gasket,** between Exhaust Camshaft Cover and Cylinder Head	5—43	1	
C.2327	**Dome Nut,** securing Camshaft Covers to Cylinder Head	5—44	22	
FW.104/E	**Washer** (Copper) under Dome Nuts	5—45	22	
C.27278	**OIL FILLER CAP, ON EXHAUST CAMSHAFT COVER**	5—46	1	
C.25480	**'O' Ring,** on Oil Filler Cap	5—47	1	
C.27756	**Washer** (Fibre) on Oil Filler Cap		1	**FOR USE AS REQUIRED**
C.25619	**OIL PIPE, FROM CYLINDER BLOCK TO REAR OF CYLINDER HEAD**	5—48	1	
C.5846	**Banjo Bolt,** securing Oil Pipe to Cylinder Head and Block	5—49	3	
C.4146	**Washer** (Copper) on Banjo Bolts, at each side of Banjos	5—50	6	
C.26706	**FRONT COVER AND BREATHER HOUSING ASSEMBLY**	5—51	1	
C.18604/1	**Gauze Filter Assembly,** behind Front Cover	5—52	1	
C.2227	**Gasket,** at front and rear of Filter	5—53	2	
C.2327	**Dome Nut,** securing Front Cover to Cylinder Head	5—54	4	
FG.104/X	**Washer,** Spring, under Dome Nuts	5—55	4	

SECTION 5

CYLINDER HEAD

Part No.	Description	Plate No.	No. per Unit	Remarks
C.26774	**BREATHER PIPE FROM BREATHER HOUSING TO AIR CLEANER**	5—56	1	
C.26775	**HOSE, CONNECTING BREATHER PIPE TO BREATHER HOUSING AND AIR CLEANER**	5—57	2	
C.15886/8	**Clip,** securing Hoses	5—58	4	
C.18398	**EXHAUST MANIFOLD, FRONT**	5—59	1	
C.18399	**EXHAUST MANIFOLD, REAR**	5—60	1	
C.2318	**Gasket,** between Exhaust Manifolds and Cylinder Head	5—61	2	
C.23040	**Clip,** under Exhaust Manifold Nuts, retaining Dipstick	5—62	1	
C.19706	**Distance Piece,** under Clip	5—63	2	
C.2369	**Stud,** in Outlet Flange of Exhaust Manifolds, for attachment of Exhaust Down Pipes	5—64	8	
C.17916	**Nut,** Special, securing Exhaust Down Pipes to Manifolds		8	**See also Exhaust System**
FW.106/T	**Washer,** Plain, under Nuts		8	
C.18405/1	**Sealing Ring,** between Exhaust Manifolds and Exhaust Down Pipes	5—65	2	
C.26857	**INLET MANIFOLD ASSEMBLY**	5—66	1	
C.23232/1	**Gasket,** between Inlet Manifold and Cylinder Head	5—67	1	
C.2496	**Stud,** in Inlet Manifold, for Water Outlet Pipe	5—68	3	
C.6570	**Stud,** in Inlet Manifold, for Carburetters	5—69	8	
C.11649	**Pivot Pin,** in Inlet Manifold, for Accelerator Control Connecting Link	5—70	1	
FG.105/X	**Washer,** Spring, on Pivot Pin		1	
C.17421	**ADAPTOR, AT REAR OF INLET MANIFOLD, FOR HEATER WATER FEED**	5—71	1	
C.2296/1	**Washer** (Copper) on Adaptor	5—72	1	
C.26420	**R.H. MANIFOLD STARTING PIPE ASSEMBLY**	5—73	1	
C.26419	**L.H. MANIFOLD STARTING PIPE ASSEMBLY**	5—74	1	
C.26714	**STARTING PIPE ASSEMBLY FROM FRONT CARBURETTER TO MANIFOLD PIPES**	5—75	1	

CYLINDER HEAD

Part No.	Description	Plate No.	No. per Unit	Remarks
C.14683	**TUBE (NEOPRENE) CONNECTING STARTING PIPES**	5—76	2	
C.2905/1	**Clip,** securing Connecting Tubes	5—77	4	
C.26823	**WATER OUTLET PIPE**	5—78	1	
C.23234	**Gasket,** between Water Outlet Pipe and Inlet Manifold	5—79	1	
UFN.131/L	**Nut,** securing Water Outlet Pipe to Inlet Manifold		3	
FG.105/X	**Washer,** Spring, under Nuts		3	
C.20766	**THERMOSTAT, IN INLET MANIFOLD (OPENING TEMPERATURE 159° TO 168°F. — 70° TO 75°C.)**	5—80	1	
C.20766/1	**THERMOSTAT, IN INLET MANIFOLD (OPENING TEMPERATURE 174° TO 183°F. — 79° TO 84°C.)**	5—80	1	**FOR USE ONLY IN COLD CLIMATES**
C.22516	**THERMOSTAT, IN INLET MANIFOLD, OPERATING CARBURETTER AUTOMATIC CHOKE**	5—81	1	
C.2475	**Gasket,** under Thermostat	5—82	1	
C.7134/1	**Screw,** Set, securing Thermostat		3	
C.723/A	**Washer,** Shakeproof, on Setscrews		3	
N.11Y	**SPARKING PLUG (CHAMPION)**		6	
5520/1	**HIGH TENSION SPARKING PLUG LEAD (21 FEET LONG)**		1	
C.18285	**INSULATING SLEEVE (RUBBER) FOR SPARKING PLUG TERMINALS**		6	
C.27494	**SPARKING PLUG TERMINAL (INCORPORATING SUPPRESSOR)**		6	
C.25127	**CLIP, RETAINING SPARKING PLUG LEADS TO INLET MANIFOLD**		1	
3204	**Grommet,** in Clip		1	

SECTION 5

CYLINDER HEAD

Part No.	Description	Plate No.	No. per Unit	Remarks
C.19889	SLEEVE (P.V.C.) ON SPARKING PLUG LEADS AT FRONT OF CYLINDER HEAD		1	
C.24126	CONDUIT, ALONG CENTRE OF CYLINDER HEAD, ENCLOSING SPARKING PLUG LEADS		1	

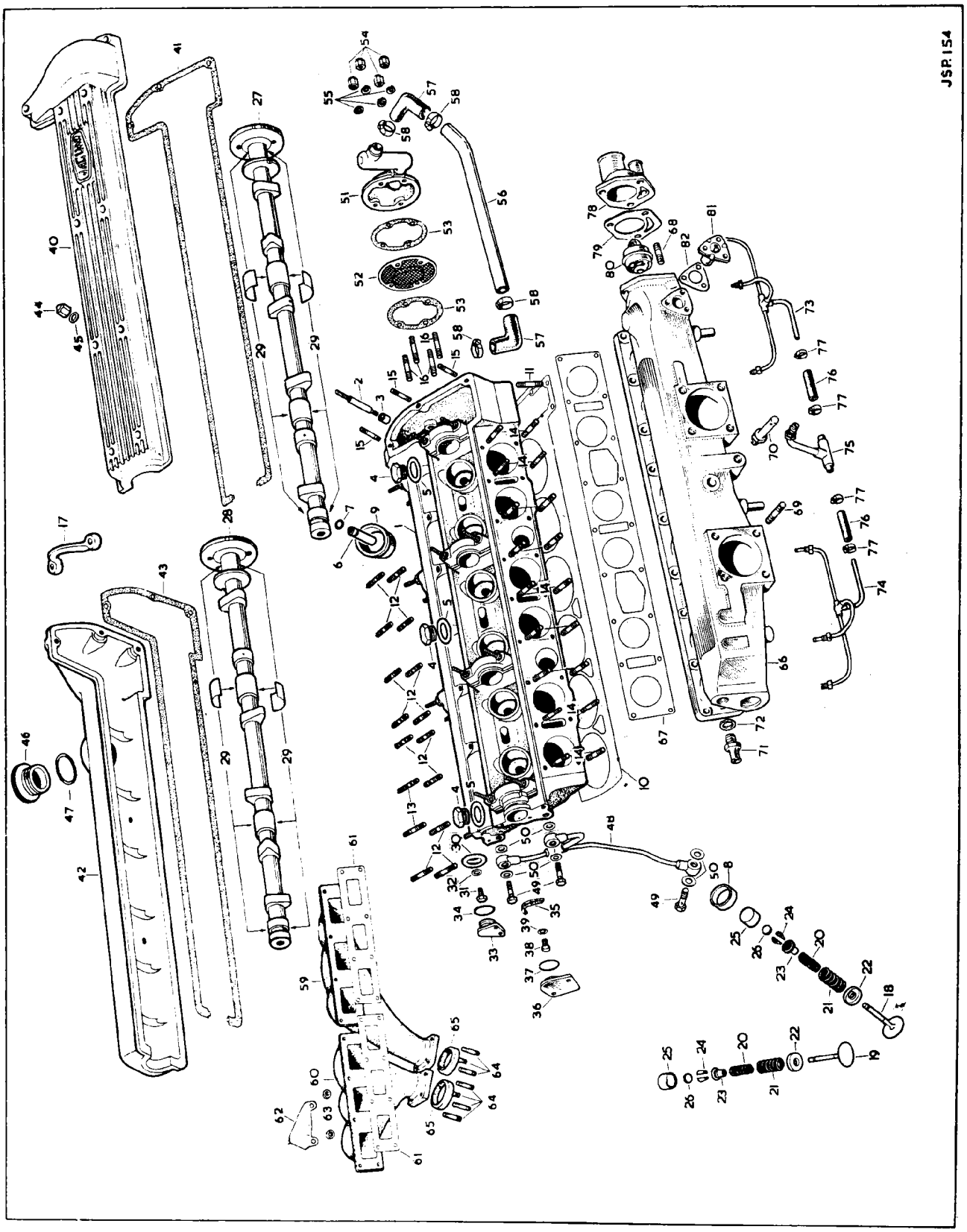

PLATE 5

TIMING GEAR

Part No.	Description	Plate No.	No. per Unit	Remarks
C.24686	**SPROCKET FOR CAMSHAFTS**	6—1	2	
1003	**Adjusting Plate,** inside Camshaft Sprockets (complete with Clamping Plate)	6—2	2	
C.2193	**Circlip,** retaining Adjusting Plates in Sprockets	6—3	2	
C.2178	**Guide Pin,** through Adjusting Plates	6—4	2	
C.2194	**Star Washer,** on Guide Pins, behind Adjusting Plates	6—5	2	
C.2261	**Circlip,** retaining Guide Pins	6—6	2	
C.2310	**Screw,** Set, securing Adjusting Plates and Sprockets to Camshafts		4	
C.4128/1	**FRONT BRACKET, MOUNTING TIMING GEAR**	6—7	1	
C.21703	**REAR BRACKET, MOUNTING TIMING GEAR**	6—8	1	
C.2182	**Stud,** fixing front and rear Mounting Brackets		4	
UFN.125/L	**Nut,** on Studs		4	
C.724	**Washer,** Shakeproof, under Nuts		4	
UFB.131/27R	**Bolt,** securing Brackets to Cylinder Block		4	
C.740	**Washer,** Shakeproof, on Bolts		4	
C.26740	**IDLER SPROCKET ASSEMBLY (21 TEETH) BETWEEN MOUNTING BRACKETS**	6—9	1	
C.2319	**Bush,** for Idler Sprocket		1	
C.27189	**ECCENTRIC SHAFT, THROUGH IDLER SPROCKET, FOR ADJUSTMENT OF UPPER TIMING CHAIN**	6—10	1	
C.2282	**Plug,** in end of Eccentric Shaft		1	
C.4404	**MICRO - ADJUSTMENT PLATE, ON FACE OF FRONT MOUNTING BRACKET, FOR UPPER TIMING CHAIN**	6—11	1	
C.3338/4	**Nut,** securing Adjustment Plate to Eccentric Shaft		1	
C.742	**Washer,** Shakeproof, under Nut		1	
C.4405	**Plunger Pin,** in Front Mounting Bracket, locking Adjustment Plate	6—12	1	
C.2297	**Spring,** behind Plunger Pin	6—13	1	
C.25275	**INTERMEDIATE SPROCKET ASSEMBLY AT TOP OF LOWER TIMING CHAIN**	6—14	1	
C.2320	**Bush,** for Sprocket		1	

SECTION 6

TIMING GEAR

Part No.	Description	Plate No.	No. per Unit	Remarks
C.26608	**SHAFT, HOLDING INTERMEDIATE SPROCKET**	6—15	1	
C.16626	**Shim,** for adjustment of End Float on Shaft	6—16	As req'd	
C.2335	**Circlip,** retaining Shaft	6—17	1	
C.2256	**UPPER TIMING CHAIN**	6—18	1	
C.13617	**R.H. DAMPER ASSEMBLY FOR UPPER TIMING CHAIN**	6—19	1	
C.13616	**L.H. DAMPER ASSEMBLY FOR UPPER TIMING CHAIN**	6—20	1	
C.21734	**Distance Piece,** for Upper Timing Chain Dampers	6—21	4	
C.25819	**Retainer,** for Upper Timing Chain	6—22	1	
C.2255	**LOWER TIMING CHAIN**	6—23	1	
C.21815	**INTERMEDIATE DAMPER ASSEMBLY FOR LOWER TIMING CHAIN**	6—24	1	
UFS.131/5R	**Screw,** Set, securing Intermediate Damper to Cylinder Block		2	
C.21831	**Tab Washer,** on Setscrews	6—25	1	
C.13614/1	**VIBRATION DAMPER FOR LOWER TIMING CHAIN**	6—26	1	
UFS.131/5R	**Screw,** Set, securing Vibration Damper to Cylinder Block		2	
C.20397	**Tab Washer,** on Setscrews	6—27	1	
C.10332	**HYDRAULIC TENSIONER ASSEMBLY, FOR LOWER TIMING CHAIN**	6—28	1	
6029	**Tab Washer,** retaining Adjuster Plug		1	
C.9766	**Shim,** for adjustment of Hydraulic Chain Tensioner	6—29	As req'd	
UFB.125/11R	**Bolt,** securing Hydraulic Chain Tensioner to Cylinder Block		2	
C.10333	**Tab Washer,** retaining Bolts	6—30	1	
6265	**REPAIR KIT, FOR HYDRAULIC CHAIN TENSIONER (SD.1042)**		1	
C.13457	**FILTER GAUZE, IN CYLINDER BLOCK, BEHIND HYDRAULIC CHAIN TENSIONER**	6—31	1	

TIMING GEAR

Part No.	Description	Plate No.	No. per Unit	Remarks
C.8614/1	**FRONT TIMING COVER**	6—32	1	
C.8615	**Gasket,** between Timing Cover and Cylinder Block	6—33	2 halves	
C.24611/1	**Oil Seal,** between Timing Cover and Oil Sump	6—34	1	
C.2183	**Stud,** in Front Timing Cover, fixing Cylinder Head		2	
C.2184	**Stud,** in Front Timing Cover, fixing Water Pump		2	NOT REQUIRED WHEN AIR CONDITIONING IS FITTED
C.23229	**Stud,** in Front Timing Cover, fixing Water Pump		1	
C.2325	**Stud,** in Front Timing Cover, fixing Oil Sump		4	
C.23226	**Stud,** in Cylinder Block, fixing Front Timing Cover and Water Pump		2	
UFN.131/L	**Nut,** on Studs		9	
FG.105/X	**Washer,** Spring, under Nuts securing Cylinder Head and Water Pump		4	
C.725	**Washer,** Shakeproof, under Nuts securing Oil Sump		4	
UFN.131/L	**Nut,** on Studs in Cylinder Block, securing Front Timing Cover and Water Pump		2	
FG.105/X	**Washer,** Spring, under Nuts		2	
UFB.131/9R	**Bolt,** securing Front Timing Cover to Cylinder Block		1	
UFB.131/14R	**Bolt,** securing Front Timing Cover to Cylinder Block		1	NOT REQUIRED WHEN AIR CONDITIONING IS FITTED
UFB.131/21R	**Bolt,** securing Front Timing Cover and Water Pump to Cylinder Block		4	
UFB.131/22R	**Bolt,** securing Front Timing Cover and Cable Clips to Cylinder Block		1	
FG.105/X	**Washer,** Spring, under Nuts		6	
UFB.137/11R	**Bolt,** securing Front Timing Cover to Cylinder Block		3	REQUIRED ONLY WHEN POWER ASSISTED STEERING IS FITTED
UFB.137/14R	**Bolt,** securing Front Timing Cover to Cylinder Block		3	NOT REQUIRED WHEN POWER ASSISTED STEERING IS FITTED
UFB.137/12R	**Bolt,** securing Front Timing Cover and Alternator Adjusting Bracket to Cylinder Block		2	
FG.106/X	**Washer,** Spring, on Bolts		5	
FW.105/E	**Washer** (Copper) under Nuts at Cylinder Head to Front Timing Cover fixings		2	
C.24646	**BRACKET ASSEMBLY, FOR ALTERNATOR ADJUSTING STRAP**	6—35	1	
C.27062	**IDLER PULLEY ASSEMBLY, TENSIONING WATER PUMP BELT**	6—36	1	
C.3968/2	**Nut,** Self-Locking, securing Pulley to Pivot Arm		1	
C.27409	**PIVOT ARM FOR IDLER PULLEY**	6—37	1	NOT REQUIRED WHEN POWER-ASSISTED STEERING IS FITTED
UFB.143/16R	**Bolt,** securing Pivot Arm to Bracket		1	
C.727	**Washer,** Shakeproof, on Bolt		1	
C.27713	**Belleville Washer,** between Pivot Arm and Bracket	6—38	1	
C.26943	**BRACKET, MOUNTING PIVOT ARM TO FRONT TIMING COVER**	6—39	1	

SECTION 6

TIMING GEAR

Part No.	Description	Plate No.	No. per Unit	Remarks
C.24776	**BRACKET ASSEMBLY, ON POWER STEERING OIL PUMP, FOR AUTOMATIC WATER PUMP BELT TENSIONER**		1	
UCS.137/5R	**Screw,** Set, securing Bracket to Power Steering Oil Pump		2	
FG.106/X	**Washer,** Spring, on Setscrews		2	
C.18447	**TORSION SPRING FOR AUTOMATIC ADJUSTMENT OF WATER PUMP BELT**		1	REQUIRED ONLY WHEN POWER-ASSISTED STEERING IS FITTED
C.21330	**CARRIER FOR JOCKEY PULLEY**		1	
C.8737/2	**Nut,** Self-Locking, securing Carrier to Bracket		1	
C.25876	**Washer and Limiting Stop,** under Nut		1	
C.18733	**JOCKEY PULLEY ASSEMBLY, APPLYING TENSION TO WATER PUMP BELT**		1	REQUIRED ONLY WHEN POWER-ASSISTED STEERING IS FITTED
C.3968/2	**Locknut,** securing Jockey Pulley to Carrier		1	
C.24781	**Washer,** under Locknut		1	

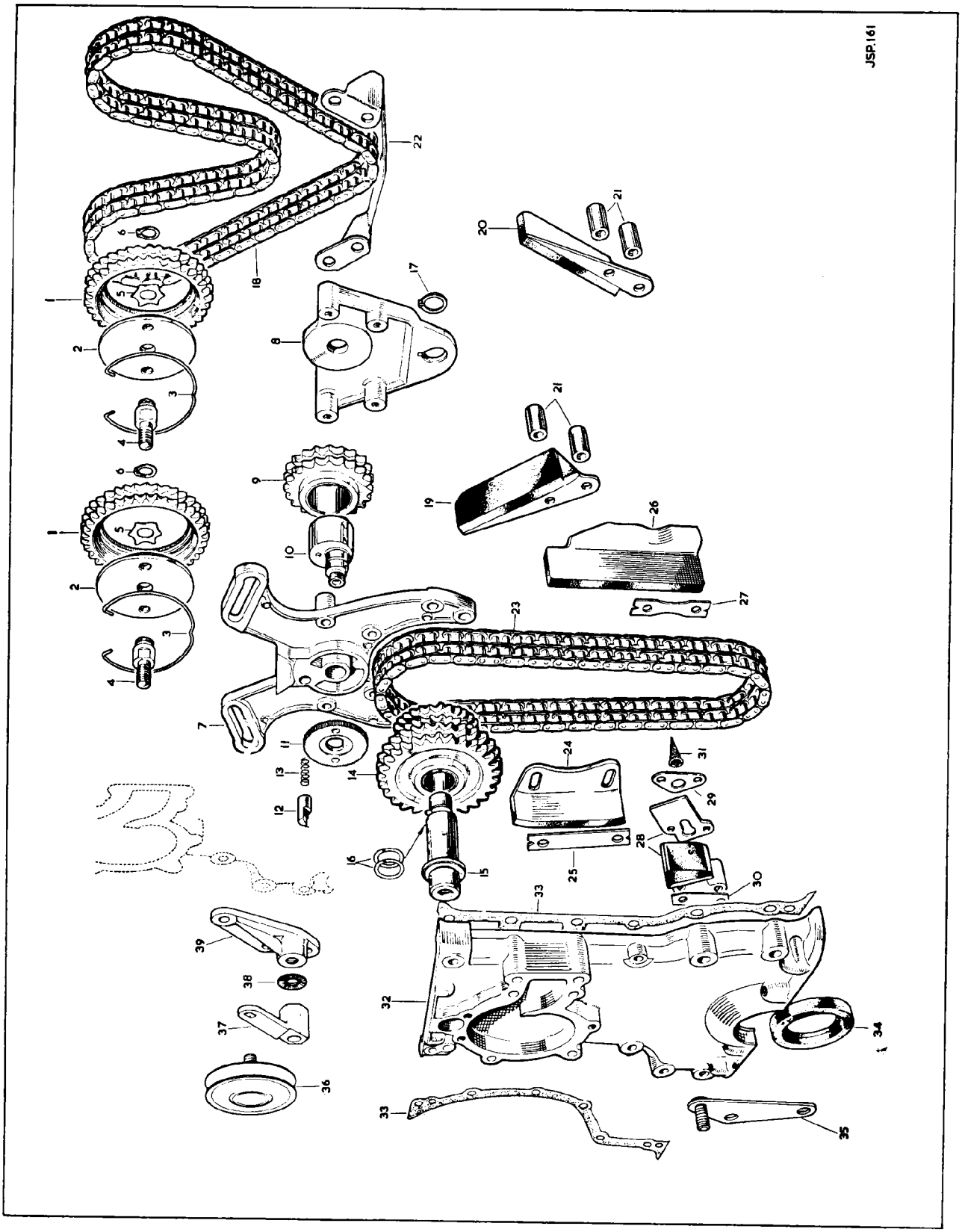

PLATE 6

SECTION 7

CARBURETTERS AND PETROL FILTER

Part No.	Description	Plate No.	No. per Unit	Remarks
C.26717	**FRONT CARBURETTER ASSEMBLY (HD.8) (AUC.9359)**	7—1	1	
10338	**Body Assembly only** (AUD.9171)	7—2	1	
11394	**Throttle Spindle** (AUD.2899)	7—3	1	
11395	**Bush,** for Throttle Spindle (AUD.2424)	7—4	2	
11396	**Retaining Ring,** Inner, for Bushes (AUD.2500)	7—5	2	
11397	**Retaining Ring,** Outer, for Bushes (AUD.2243)	7—6	2	
7016	**Throttle Disc** (Butterfly) (AUC.4890)	7—7	1	
7046	**Screw,** securing Throttle Disc to Spindle (AUC.1358)		2	
7090	**Adaptor,** for Ignition Union (AUC.2044)	7—8	1	
7091	**Gasket,** under Adaptor (AUC.2014)	7—9	1	
5618	**Screw,** securing Adaptor (AUC.2175)		2	
7105	**Washer,** Shakeproof, on Screws (LWN.403)		2	
7106	**Ignition Union** (AUC.4490)	7—10	1	
9449	**Suction Chamber and Piston Assembly** (AUC.8066)	7—11	1	
7093	**Screw,** holding Jet Needle in Position (AUC.2057)		1	
7870	**Damper Assembly,** in Suction Chamber (AUC.8110)	7—12	1	
7095	**Washer,** for Damper (AUC.4900)	7—13	1	
7871	**Spring,** assisting return of Piston (AUC.2107)	7—14	1	
5618	**Screw,** securing Suction Chamber to Carburetter Body (AUC.2175)		4	
5980	**Jet Needle** (UM)	7—15	1	
7860	**Jet Assembly** (comprising Jet Unit with Diaphragm and Cup) (AUC.8157)	7—16	1	
6958	**Jet Bearing** (AUC.2001)	7—17	1	
6959	**Nut,** locking Jet Bearing (AUC.2002)	7—18	1	
6960	**Spring,** under Jet Diaphragm (AUC.2006)	7—19	1	
7873	**Jet Housing Assembly** (AUC.8221)	7—20	1	
7114	**Float Chamber Assembly** (AUC.2088)	7—21	1	
7115	**Bolt,** securing Float Chamber and Jet Housing to Carburetter Body (AUC.2110)		4	
7105	**Washer,** Shakeproof, on Bolts (LWN.403)		4	
10026	**Lid,** for Float Chamber (AUD.2284)	7—22	1	
1090	**Float** (AUC.1123)	7—23	1	
10532	**Needle and Seat** (Viton) controlling Petrol Flow to Float Chamber (AUD.9585)	7—24	1	
10027	**Lever,** operating Float Needle (AUD.2285)	7—25	1	
1153	**Knurled Pin,** securing Lever to Float Chamber Lid (AUC.1152)	7—26	1	
7119	**Gasket,** under Float Chamber Lid (AUC.1147)	7—27	1	
5832	**Cap Nut,** securing Lid to Float Chamber (AUC.1867)	7—28	1	
1298	**Serrated Washer** (Fibre) on Cap Nut, adjacent to Lid (AUC.1928)	7—29	1	
7120	**Washer** (Aluminium) on Cap Nut (AUC.1557)	7—30	1	
479	**Filter,** in Inlet Connection on Float Chamber Lid (AUC.2139)	7—31	1	
C.11488	**Banjo Bolt,** securing Feed Pipe to Float Chamber (AUC.2698)	7—32	1	**See also Fuel System**
C.11489	**Washer** (Fibre) on Banjo Bolt (AUC.2141)	7—33	2	
6971	**Thermostat Body Assembly** (AUC.8160)	7—34	1	
6875	**Acceleration Needle Assembly** (AUC.8121)	7—35	1	
6956	**Spring,** for Acceleration Needle (AUC.1041)	7—36	1	
7121	**Jet,** for Acceleration Needle (AUC.4759)	7—37	1	
7123	**Spring Finger,** holding Acceleration Needle after adjustment (AUC.3139)	7—38	1	
6955	**Dust Shield,** for Thermostat Body (AUC.1054)	7—39	1	
7124	**Screw,** securing Acceleration Needle to Thermostat Body (AUA.1453)	7—40	2	
7105	**Washer,** Shakeproof, on Screws (LWN.403)	7—41	2	
10536	**Solenoid Assembly,** for Acceleration Needle (AUD.9490)	7—42	1	
7125	**Bracket,** mounting Thermostat Body to Carburetter (AUC.2085)	7—43	1	
7126	**Connecting Arm,** between Thermostat Body and Carburetter (AUC.2087)	7—44	1	
C.11488	**Banjo Bolt,** securing Connecting Arm and Bracket to Thermostat Body (AUC.2698)	7—45	1	
7129	**Washer** (Fibre) at each side of Bracket (AUC.4753)	7—46	2	
C.11489	**Washer** (Fibre) under head of Banjo Bolt (AUC.2141)	7—47	1	

CARBURETTERS AND PETROL FILTER

Part No.	Description	Plate No.	No. per Unit	Remarks
	FRONT CARBURETTER ASSEMBLY (Continued)			
7127	**Banjo Bolt**, securing Connecting Arm to Carburetter (AUC.2086)	7—48	1	
7128	**Washer** (Fibre) between Connecting Arm and Carburetter (AUC.2089)	7—49	1	
7120	**Washer** (Aluminium) under head of Banjo Bolt (AUC.1557)	7—50	1	
6967	**Valve**, for Slow-running Adjustment (AUC.2028)	7—51	1	
6966	**Spring**, for Slow-run Valve (AUC.2027)	7—52	1	
6968	**Gland Washer** (Neoprene) for Slow-run Valve (AUC.2029)	7—53	1	
6969	**Dished Washer** (Brass) at top of Gland Washer (AUC.2030)	7—54	1	
C.26718	**REAR CARBURETTER ASSEMBLY (HD.8) (AUC.9397)**	7—55	1	**FOR CARS FITTED WITH STANDARD OR OVERDRIVE TRANSMISSION**
10339	**Body Assembly only** (AUD.9127)		1	
11398	**Throttle Spindle** (AUD.2900)		1	
7101	**Stop**, for Throttle (AUC.2079)		1	
7050	**Taper Pin**, securing Stop to Throttle Spindle (AUC.2106)		1	
6993	**Float Chamber Assembly** (AUC.2009)		1	
10025	**Lid**, for Float Chamber (AUD.2283)		1	
	All other items are as for Front Carburetter Assembly C.26717 except that Thermostat Body 6971 and its associated items are not fitted.			
C.27017	**REAR CARBURETTER ASSEMBLY (HD.8) (AUC.9360)**		1	**FOR CARS FITTED WITH AUTOMATIC TRANSMISSION**
10339	**Body Assembly only** (AUD.9172)		1	
11398	**Throttle Spindle** (AUD.2900)		1	
7101	**Stop**, for Throttle (AUC.2079)		1	
7050	**Taper Pin**, securing Stop to Throttle Spindle (AUC.2106)		1	
C.27386	**Lever**, on Throttle Spindle, for Kick-Down Operation		1	
C.20722/8	**Roll Pin**, securing Lever		1	
6993	**Float Chamber Assembly** (AUC.2009)		1	
10025	**Lid**, for Float Chamber (AUD.2283)		1	
	All other items are as for Front Carburetter Assembly C.26717 except that Thermostat Body 6971 and its associated items are not fitted.			
UFN.131/L	**Nut**, securing Carburetters to Inlet Manifold		8	
FG.105/X	**Washer**, Spring, under Nuts		8	
10338	**BODY ASSEMBLY FOR FRONT CARBURETTER (AUD.9171)**		1	
7862	**Piston Lift Pin** (AUC.2065)		1	
7863	**Spring**, for Lift Pin (AUC.2066)		1	
6964	**Seating Washer**, for Lift Pin (AUC.2098)		1	
7865	**Washer** (Brass) above Seating Washer (AUC.4944)		1	
7866	**Circlip**, retaining Washers and Spring on Lift Pin (AUC.1250)		1	
10339	**BODY ASSEMBLY FOR REAR CARBURETTER (AUD.9172)**		1	
	Individual items are as for Body Assembly 10338			

SECTION 7

CARBURETTERS AND PETROL FILTER

Part No.	Description	Plate No.	No. per Unit	Remarks
11252	**CARBURETTER SERVICE KIT (AUE.503)**		2	
10267	**CARBURETTER THERMOSTAT SERVICE KIT (AUE.17)**		1	
7107	**CONNECTING ROD BETWEEN CARBURETTERS (AUC.2411)**	7—56	1	
4833	**COUPLING BETWEEN CONNECTING RODS AND THROTTLE SPINDLES (AUC.4334)**	7—57	2	
5801	**Bolt,** securing Couplings (AUC.2669)		4	
673	**Nut,** on Bolts (AUC.2673)		4	
4612	**Washer,** under Nuts (AUC.4612)		4	
C.14371	**LEVER, ON FRONT CARBURETTER SPINDLE, FOR THROTTLE RETURN SPRING (AUC.8405)**	7—58	1	
C.15546	**LEVER, ON REAR CARBURETTER SPINDLE, OPERATING THROTTLES (AUC.8444)**	7—59	1	
5803	**Bolt,** through Levers (AUC.2694)		2	
5614	**Nut,** on Bolts (AJD.8012)		2	
7966	**Washer,** under Nuts (AUC.8396)		2	
C.8486	**INSULATOR BETWEEN CARBURETTERS AND INLET MANIFOLD**	7—60	2	
C.7221	**Gasket,** at each side of Insulators	7—61	4	
C.12280	**OVERFLOW PIPE, FROM FLOAT CHAMBER LID**	7—62	2	
C.15992	**Clip,** securing Overflow Pipes	7—63	1	
C.21576	**SUCTION PIPE FROM FRONT CARBURETTER TO DISTRIBUTOR VACUUM UNIT**	7—64	1	
C.21573	**Elbow** (P.V.C.) connecting Suction Pipe to Vacuum Unit	7—65	1	
C.26906	**PETROL FEED PIPE ASSEMBLY LINKING CARBURETTERS**	7—66	1	

CARBURETTERS AND PETROL FILTER

Part No.	Description	Plate No.	No. per Unit	Remarks
C.26389	**PETROL FILTER ASSEMBLY (AC.7971136)**	7—67	1	
11450	**Filter Casting** (7971137)	7—68	1	
7298	**Sealing Washer**, between Filter Casting and Glass Bowl (5593321)	7—69	1	
11451	**Filter Gauze** (7971138)	7—70	1	
7300	**Glass Bowl** (1523620)	7—71	1	
7301	**Retaining Strap Assembly** (5592050)	7—72	1	
UFS.131/6R	**Screw**, Set, securing Petrol Filter to Wing Valance		2	
FG.105/X	**Washer**, Spring, on Setscrews		2	
C.15549	**BRACKET ASSEMBLY, ON FRONT CARBURETTER, ANCHORING RETURN SPRING**	7—73	1	
C.14366	**THROTTLE RETURN SPRING, FROM LEVER ON FRONT CARBURETTER TO ANCHOR BRACKET**	7—74	1	
C.13355	**THROTTLE RETURN SPRING, FROM INTERMEDIATE THROTTLE LEVER TO BRACKET ON OIL CLEANER**	7—75	1	
C.18065	**Bracket**, on Oil Cleaner, anchoring Return Spring	7—76	1	
C.26716	**THROTTLE STOP BRACKET ASSEMBLY**	7—77	1	
C.15548	**Dowel Bolt**, securing Stop Bracket to Carburetters	7—78	2	**See also Air Cleaner**
UFN.131/L	**Nut**, on Dowel Bolts		2	
FG.105/X	**Washer**, Spring, under Nuts		2	
UFS.319/7H	**Screw**, Set, in Bracket, for Throttle Stop Adjustment		1	
UFN.119/L	**Nut**, locking Setscrew		1	
C.15538	**INTERMEDIATE THROTTLE LEVER, ON THROTTLE STOP BRACKET**	7—79	1	
C.26443	**Clevis Pin**, pivoting Intermediate Throttle Lever	7—80	1	
BD.18193	**Circlip**, retaining Clevis Pin	7—81	1	
C.15540	**INTERMEDIATE THROTTLE LINK BETWEEN INTERMEDIATE LEVER AND LEVER ON REAR CARBURETTER SPINDLE**	7—82	2	
C.26445	**Clevis Pin**, retaining Links to Lever on Rear Carburetter Spindle	7—83	1	
FW.104/T	**Washer**, Plain, on Clevis Pin, between Jaws of Carburetter Lever		1	
BD.18193	**Circlip**, retaining Clevis Pin	7—84	1	

SECTION 7

CARBURETTERS AND PETROL FILTER

Part No.	Description	Plate No.	No. per Unit	Remarks
C.15541	**TRUNNION, JOINING INTERMEDIATE THROTTLE LINKS TO LEVER AND FOR CONNECTION OF THROTTLE LINK ROD**	7—85	1	
C.26444	**Clevis Pin**, through Trunnion	7—86	2	
BD.18193	**Circlip**, retaining Clevis Pins	7—87	2	
C.15543	**THROTTLE LINK ROD ASSEMBLY FOR CONNECTION OF ACCELERATOR BELL CRANK LEVER**	7—88	1	

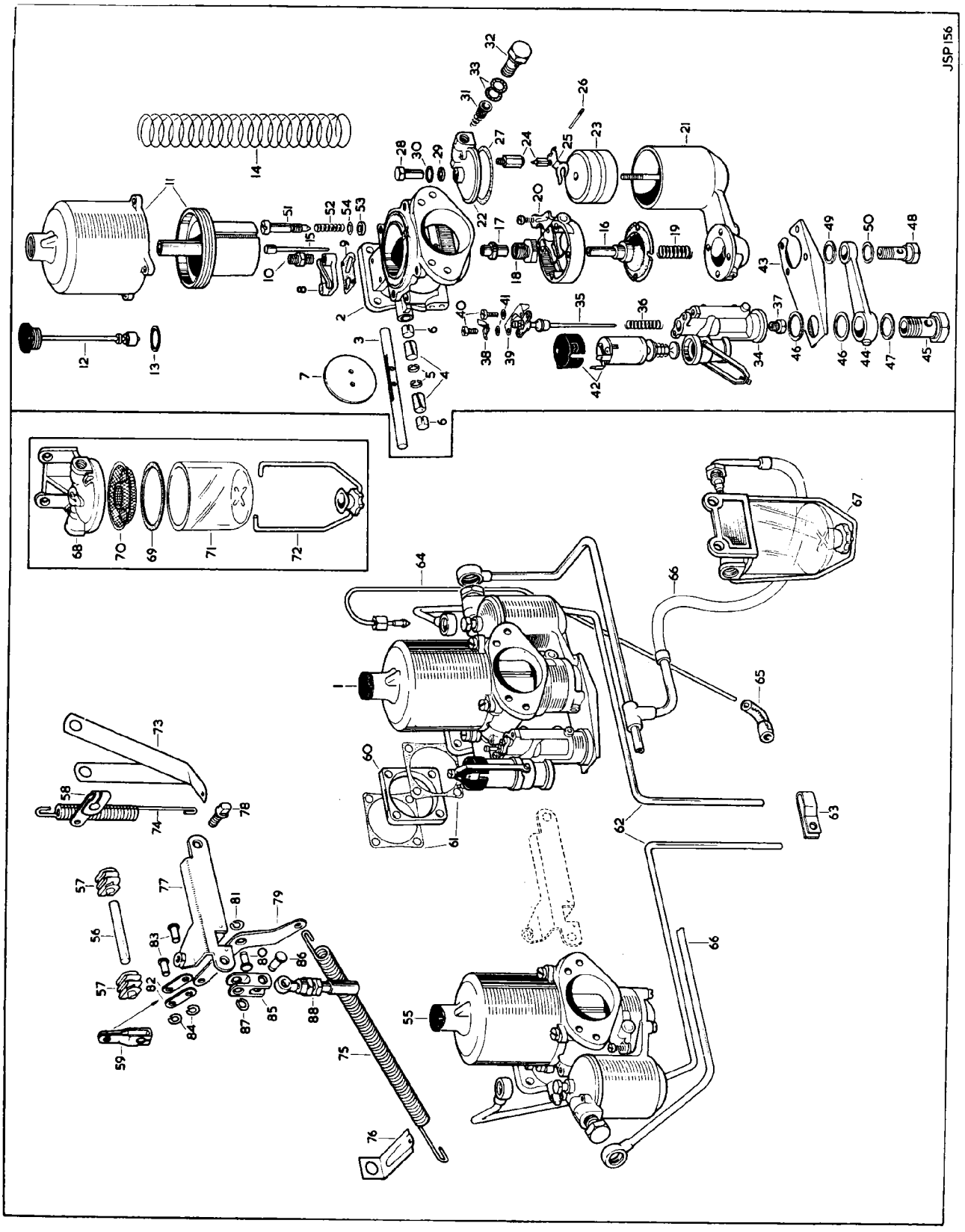

PLATE 7

SECTION 8

AIR CLEANER

Part No.	Description	Plate No.	No. per Unit	Remarks
C.26903	**AIR CLEANER ASSEMBLY (7972024)**		1	
10075	**Shell Assembly,** for Air Cleaner (7964880)	8—1	1	
11448	**End Plate and Element Bracket Assembly** (7972087)	8—2	1	
C.19530	**Paper Element** (A.6035)	8—3	1	
C.20711	**Gasket,** seating Element (7955245)	8—4	2	
10073	**Plate,** retaining Element (7955774)	8—5	1	
6818	**Wing Nut,** securing Retaining Plate (1527211)	8—6	1	
10072	**Washer,** under Wing Nut (1521476)	8—7	1	
C.12734	**Wing Nut,** securing Air Cleaner to Support Bracket	8—8	2	
FW.105/T	**Washer,** Plain, under Wing Nuts	8—9	2	
10075	**SHELL ASSEMBLY, FOR AIR CLEANER (7964880)**	8—1	1	
6465	**Clip,** securing End Plate (7222462)		2	
C.23088	**BRACKET ASSEMBLY, SUPPORTING AIR CLEANER**	8—10	1	
C.19735	**SEAL (RUBBER) CONNECTING AIR CLEANER TO AIR INTAKE**	8—11	1	
C.26961	**AIR INTAKE ASSEMBLY**	8—12	1	
C.26723	**Gasket,** between Air Intake and Carburetters	8—13	2	
C.15548	**Dowel Bolt,** positioning Air Intake to Carburetters	8—14	2	**See also Carburetters and Petrol Filter**
C.8243	**Adaptor,** in Air Intake, for Drain Tubes	8—15	2	
UCS.131/8R	**Screw,** Set, securing Air Intake to Carburetters		2	
FG.105/X	**Washer,** Spring, on Setscrews		2	
C.8244	**DRAIN TUBE ASSEMBLY FOR AIR INTAKE (COMPLETE WITH P.V.C. RINGS)**	8—16	1	
C.1040/26	**Clip,** securing Drain Tubes	8—17	1	
C.23533	**AIR CLEANER INTAKE HOSE**	8—18	1	
C.23432	**Bracket,** supporting Intake Hose	8—19	1	**NOT REQUIRED WHEN AIR CONDITIONING IS FITTED**
C.23532	**Clip,** securing Intake Hose to Bracket	8—20	1	
UFS.125/6R	**Screw,** Set, securing Clip to Bracket		1	
UFN.125/L	**Nut,** on Setscrew		1	
FG.104/X	**Washer,** Spring, under Nut		1	
C.23100	**SEAL (RUBBER) CONNECTING INTAKE HOSE TO AIR CLEANER**	8—21	1	

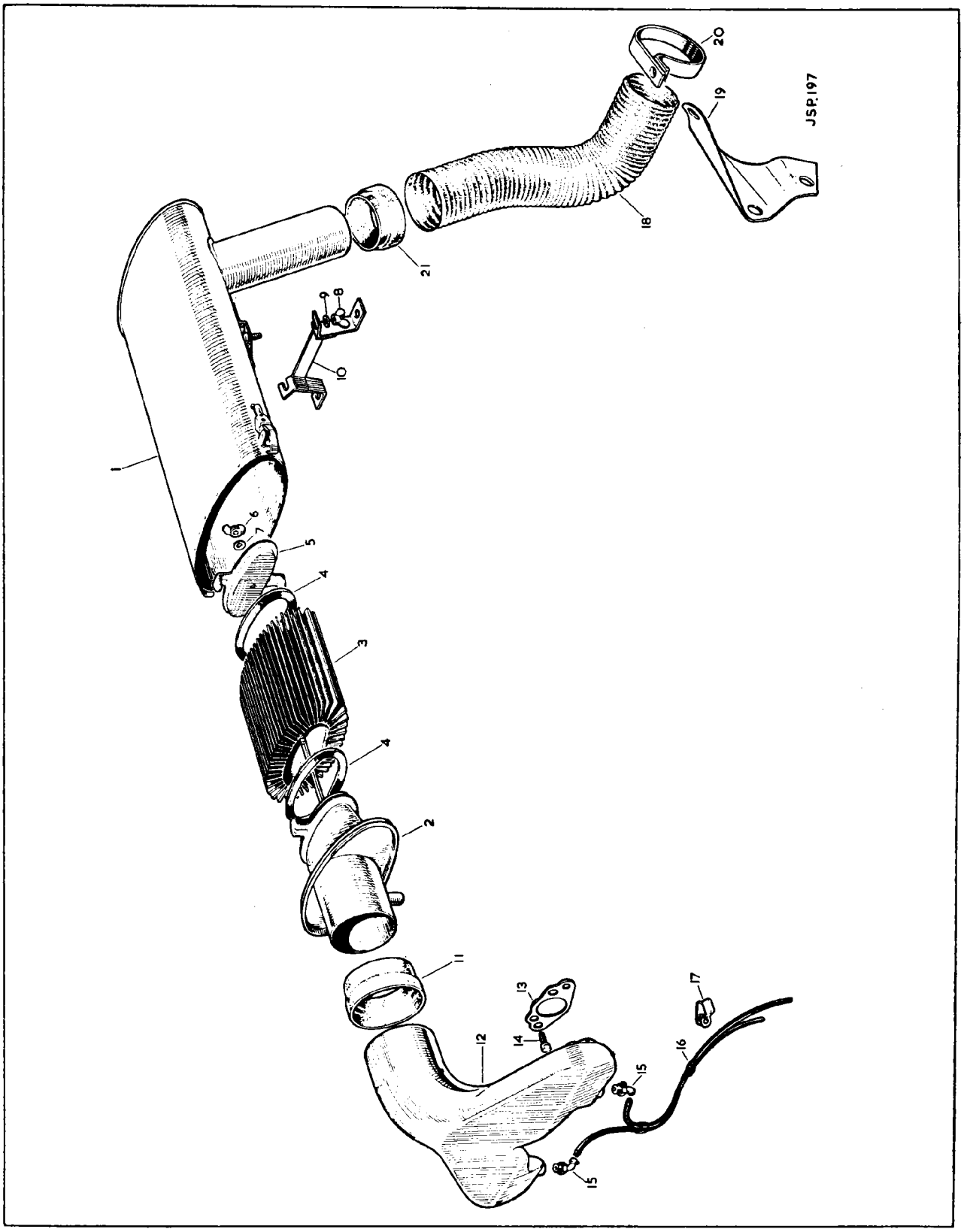

PLATE 8

ACCELERATOR CONTROLS

STANDARD OR OVERDRIVE TRANSMISSION (R.H. DRIVE CARS ONLY)

Part No.	Description	Plate No.	No. per Unit	Remarks
C.13622	**ACCELERATOR PEDAL ASSEMBLY**	9—1	1	
UFS.125/11R	**Screw,** Set, restricting Pedal Travel	9—2	1	
UFN.125/L	**Nut,** on Setscrew	9—3	1	
C.3479	**Felt Washer,** at each side of Pedal	9—4	2	
C.23477	**BRACKET ASSEMBLY, MOUNTING ACCELERATOR PEDAL TO FLOOR**	9—5	1	
C.11908	**Distance Piece,** under Mounting Bracket	9—6	4	
BD.8291/4	**Screw,** Set, securing Mounting Bracket to Floor		4	
FG.104/X	**Washer,** Spring, on Setscrews		4	
C.6969	**Fulcrum Pin,** securing Accelerator Pedal to Mounting Bracket	9—7	1	
C.8737/1	**Nut,** Self-locking, on Fulcrum Pin		1	
FW.104/T	**Washer,** Plain, under Nut		1	
C.11671	**PAD (RUBBER) ON ACCELERATOR PEDAL**	9—8	1	
C.13532	**ACCELERATOR PEDAL SHAFT ASSEMBLY**	9—9	1	
C.12486	**Roller,** on Accelerator Pedal Shaft	9—10	1	
L.102.5/8U	**Split Pin,** securing Roller to Shaft	9—11	1	
C.386	**Washer,** Special, behind Split Pin	9—12	1	
C.10940/1	**RUBBER BUSH, IN DASH, MOUNTING ACCELERATOR PEDAL SHAFT**	9—13	1	
C.11678	**Bearing,** inside Rubber Bush	9—14	2	
C.386	**Washer,** Special, behind Bush	9—15	1	
L.102.5/8U	**Split Pin,** retaining Washer	9—16	1	
C.13316	**Distance Washer,** at front end of Rubber Bush	9—17	1	
C.13545	**Distance Collar,** behind Washer	9—18	1	
C.13537	**Split Collar,** at end of Pedal Shaft	9—19	1	
C.750	**Key,** retaining Split Collar on Pedal Shaft	9—20	1	
BD.1708/2	**Washer,** Double Coil Spring, behind Split Collar	9—21	1	
C.386	**Washer,** Special, at end of Pedal Shaft	9—22	1	
L.102.5/8U	**Split Pin,** through Pedal Shaft	9—23	1	
C.11672	**BRACKET, ON DASH, MOUNTING ACCELERATOR PEDAL SHAFT**	9—24	1	
C.13395	**Spacer,** for Mounting Bracket	9—25	2	
UFS.125/9R	**Screw,** Set, securing Mounting Bracket to Dash		2	
FG.104/X	**Washer,** Spring, on Setscrews		2	
C.8016	**Grommet** (Rubber) in Mounting Bracket	9—26	1	
C.11678	**Bearing,** in Rubber Grommet	9—27	1	

SECTION 9

ACCELERATOR CONTROLS

STANDARD OR OVERDRIVE TRANSMISSION (R.H. DRIVE CARS ONLY)

Part No.	Description	Plate No.	No. per Unit	Remarks
C.13536	**OPERATING LEVER AT END OF ACCELERATOR PEDAL SHAFT**	9—28	1	
UFS.131/7R	**Screw,** Set, clamping Lever to Split Collar on Pedal Shaft		1	
FG.105/X	**Washer,** Spring, on Setscrew		1	
C.26413	**STEADY BAR BETWEEN ACCELERATOR PEDAL SHAFT AND CONNECTING LINK**	9—29	1	
C.11651	**CONNECTING LINK ASSEMBLY**	9—30	1	
C.11649	**Pivot Pin,** in Inlet Manifold, holding connecting Link	9—31	1	
C.725	**Washer,** Shakeproof, behind Pivot Pin	9—32	1	
L.102.5/8U	**Split Pin,** securing Connecting Link to Pivot Pin		1	
FW.105/T	**Washer,** Plain, behind Split Pin		1	
BD.1708/1	**Washer,** Double Coil Spring, behind Plain Washer		1	
C.15499	**BELL CRANK LEVER ASSEMBLY**	9—33	1	
UFB.125/8R	**Bolt,** securing Bell Crank Lever and Steady Bar in Connecting Link		1	
C.13561	**Spacing Washer,** between Bell Crank Lever and Steady Bar		1	
C.8667/1	**Nut,** Self-locking on Bolt		1	
C.26411	**CONTROL ROD ASSEMBLY, LINKING OPERATING LEVER AND BELL CRANK LEVER**	9—34	1	
L.103/7U	**Split Pin,** securing Control Rod to Levers		2	
FW.104/T	**Washer,** Plain, behind Split Pin		2	
BD.1708/5	**Washer,** Double Coil Spring, behind Plain Washer		2	

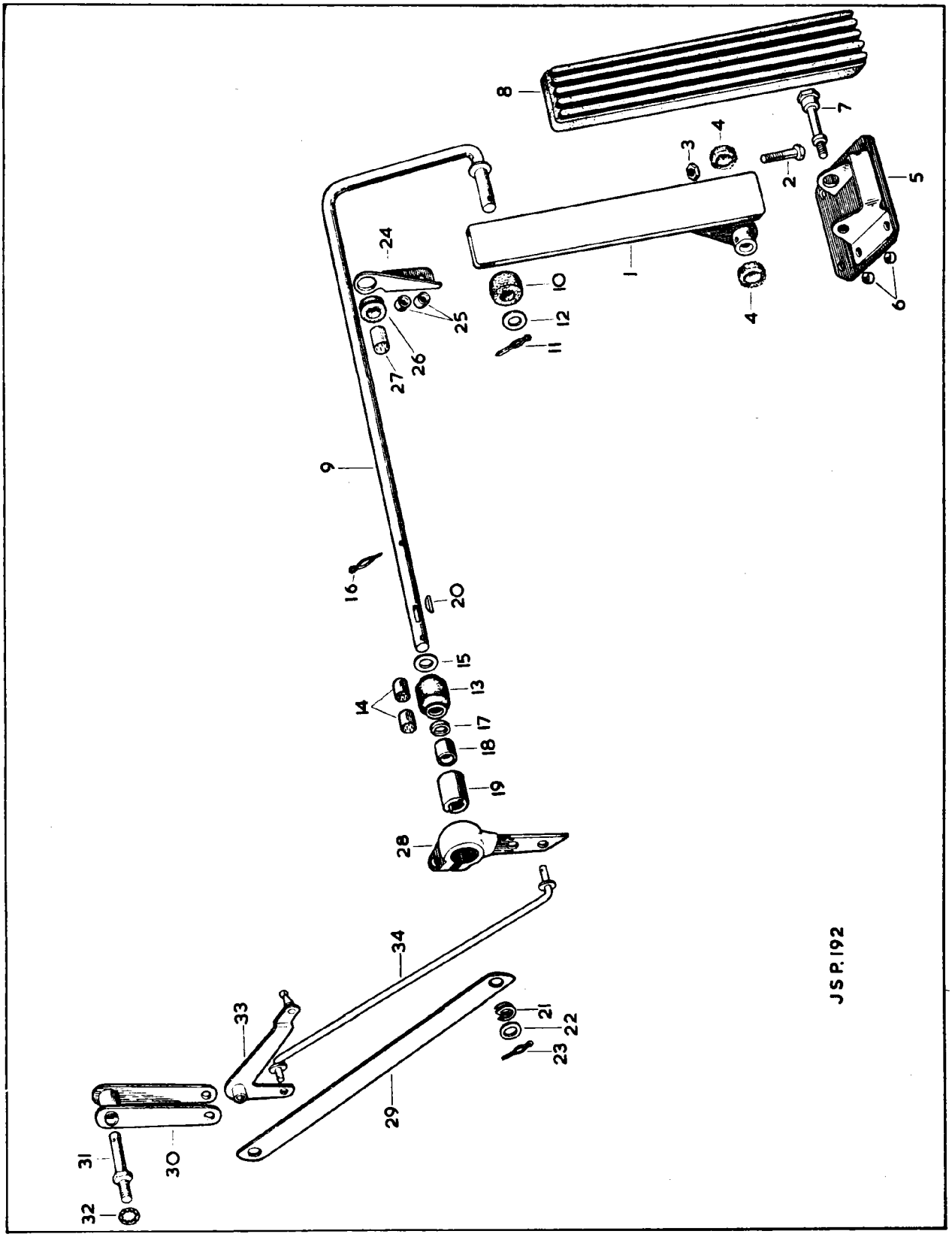

PLATE 9

ACCELERATOR CONTROLS

STANDARD OR OVERDRIVE TRANSMISSION (L.H. DRIVE CARS ONLY)

Part No.	Description	Plate No.	No. per Unit	Remarks
C.13934	**ACCELERATOR PEDAL ASSEMBLY**	10—1	1	
UFS.125/11R	**Screw,** Set, restricting Pedal Travel	10—2	1	
UFN.125/L	**Nut,** on Setscrew	10—3	1	
C.3479	**Felt Washer,** at each side of Pedal Boss	10—4	2	
C.13387	**BRACKET ASSEMBLY, MOUNTING ACCELERATOR PEDAL TO FLOOR**	10—5	1	
BD.8291/2	**Screw,** Set, securing Mounting Bracket to Floor		4	
FG.104/X	**Washer,** Spring, on Setscrews		4	
C.6969	**Fulcrum Pin,** securing Accelerator Pedal to Mounting Bracket	10—6	1	
C.8737/1	**Nut,** Self-locking, on Fulcrum Pin		1	
FW.104/T	**Washer,** Plain, under Nut		1	
C.11671	**PAD (RUBBER) ON ACCELERATOR PEDAL**	10—7	1	
C.22246	**ACCELERATOR PEDAL SHAFT ASSEMBLY**	10—8	1	
C.12486	**Roller,** on Accelerator Pedal Shaft	10—9	1	
L.102.5/8U	**Split Pin,** securing Roller to Shaft	10—10	1	
C.386	**Washer,** Special, behind Split Pin	10—11	1	
BD.1814/6	**Pop Rivet,** securing Pedal Housing to L.H. side of Dash		3	
C.13536	**OPERATING LEVER AT END OF ACCELERATOR PEDAL SHAFT**	10—12	1	
UFS.131/7R	**Screw,** Set, clamping Lever to Pedal Shaft		1	
FG.105/X	**Washer,** Spring, on Setscrew		1	
C.13308	**SPHERICAL BEARING ASSEMBLY, ON R.H. SIDE OF DASH, FOR ACCELERATOR PEDAL SHAFT**	10—13	1	
BD.1814/6	**Pop Rivet,** securing Spherical Bearing		3	
C.13316	**Distance Piece,** behind Bearing on Pedal Shaft	10—14	1	
BD.1708/2	**Washer,** Double Coil Spring, behind Distance Piece	10—15	1	
FW.106/T	**Washer,** Plain, behind Spring Washer	10—16	1	
L.102.5/6U	**Split Pin,** through Pedal Shaft	10—17	1	
C.27706	**STEADY BAR ASSEMBLY, BETWEEN ACCELERATOR PEDAL SHAFT AND CONNECTING LINK**	10—18	1	

SECTION 10

ACCELERATOR CONTROLS

STANDARD OR OVERDRIVE TRANSMISSION (L.H. DRIVE CARS ONLY)

Part No.	Description	Plate No.	No. per Unit	Remarks
C.11651	**CONNECTING LINK ASSEMBLY**	10—19	1	
C.11649	**Pivot Pin,** in Inlet Manifold, holding Connecting Link	10—20	1	
C.725	**Washer,** Shakeproof, behind Pivot Pin	10—21	1	
L.102.5/8U	**Split Pin,** securing Connecting Link to Pivot Pin		1	
FW.105/T	**Washer,** Plain, behind Split Pin		1	
BD.1708/1	**Washer,** Double Coil Spring, behind Plain Washer		1	
C.15499	**BELL CRANK LEVER ASSEMBLY**	10—22	1	
UFB.125/8R	**Bolt,** securing Bell Crank Lever and Steady Bar in Connecting Link		1	
C.13561	**Spacing Washer,** between Bell Crank Lever and Steady Bar		1	
C.8667/1	**Nut,** Self-locking, on Bolt		1	
C.27705	**CONTROL ROD ASSEMBLY, LINKING OPERATING LEVER AND BELL CRANK LEVER**	10—23	1	
L.103/7U	**Split Pin,** securing Control Rod to Levers		2	
FW.104/T	**Washer,** Plain, behind Split Pin		2	
BD.1708/5	**Washer,** Double Coil Spring, behind Plain Washers		2	

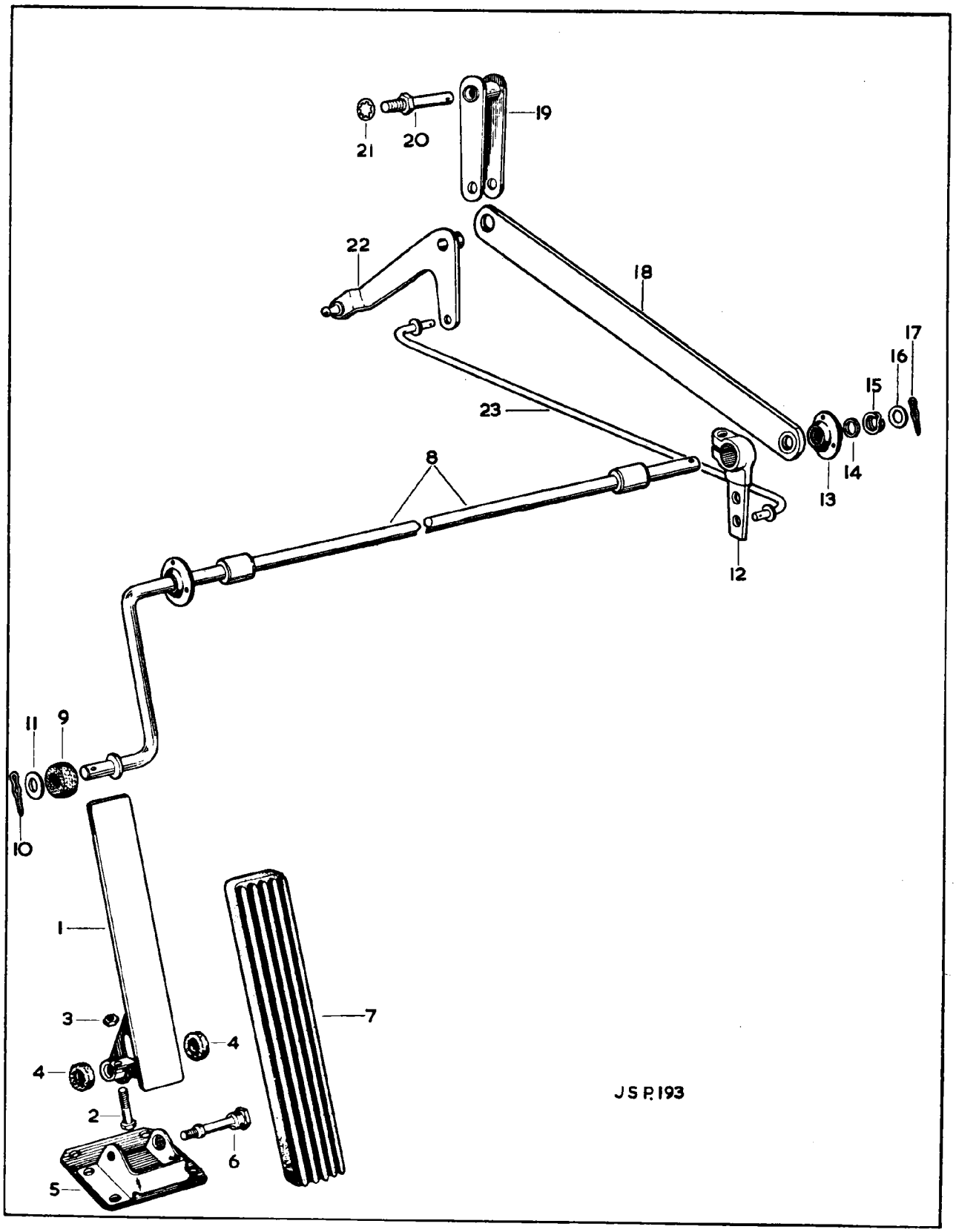

PLATE 10

SECTION 11

ACCELERATOR CONTROLS

AUTOMATIC TRANSMISSION (R. H. DRIVE CARS ONLY)

Part No.	Description	Plate No.	No. per Unit	Remarks
C.13622	**ACCELERATOR PEDAL ASSEMBLY**	11—1	1	
UFS.125/11R	**Screw,** Set, restricting Pedal Travel	11—2	1	
UFN.125/L	**Nut,** on Setscrew	11—3	1	
C.3479	**Felt Washer,** at each side of Pedal Boss	11—4	2	
C.23477	**BRACKET ASSEMBLY, MOUNTING ACCELERATOR PEDAL TO FLOOR**	11—5	1	
C.11908	**Distance Piece,** under Mounting Bracket	11—6	4	
BD.8291/4	**Screw,** Set, securing Mounting Brackets to Floor		4	
FG.104/X	**Washer,** Spring, on Setscrews		4	
C.6969	**Fulcrum Pin,** securing Accelerator Pedal to Mounting Brackets	11—7	1	
C.8737/1	**Nut,** Self-locking, on Fulcrum Pin		1	
FW.104/T	**Washer,** Plain, under Nut		1	
C.11671	**PAD (RUBBER) ON ACCELERATOR PEDAL**	11—8	1	
C.13532	**ACCELERATOR PEDAL SHAFT ASSEMBLY**	11—9	1	
C.12486	**Roller,** on Accelerator Pedal Shaft	11—10	1	
L.102.5/8U	**Split Pin,** securing Roller to Shaft	11—11	1	
C.386	**Washer,** Special, behind Split Pin	11—12	1	
C.10940/1	**RUBBER BUSH, IN DASH, MOUNTING ACCELERATOR PEDAL SHAFT**	11—13	1	
C.11678	**Bearing,** inside Rubber Bush	11—14	2	
C.386	**Washer,** Special, behind Bush	11—15	1	
L.102.5/8U	**Split Pin,** retaining Washer	11—16	1	
C.13316	**Distance Washer,** at front end of Rubber Bush	11—17	1	
C.13545	**Distance Collar,** behind Washer	11—18	1	
C.13537	**Split Collar,** at end of Pedal Shaft	11—19	1	
C.750	**Key,** retaining Split Collar on Pedal Shaft	11—20	1	
BD.1708/2	**Washer,** Double Coil Spring, behind Split Collar	11—21	1	
C.386	**Washer,** Special, at end of Pedal Shaft	11—22	1	
L.102.5/8U	**Split Pin,** through Pedal Shaft	11—23	1	
C.11672	**BRACKET, ON DASH, MOUNTING ACCELERATOR PEDAL SHAFT**	11—24	1	
C.13395	**Spacer,** for Mounting Bracket	11—25	2	
UFS.125/9R	**Screw,** Set ,securing Mounting Bracket to Dash		2	
FG.104/X	**Washer,** Spring, on Setscrews		2	
C.8016	**Grommet** (Rubber) in Mounting Bracket	11—26	1	
C.11678	**Bearing,** in Rubber Grommet	11—27	1	

ACCELERATOR CONTROLS

AUTOMATIC TRANSMISSION (R. H. DRIVE CARS ONLY)

Part No.	Description	Plate No.	No. per Unit	Remarks
C.13536	**OPERATING LEVER, AT END OF ACCELERATOR PEDAL SHAFT**	11—28	1	
UFS.131/7R	**Screw,** Set, clamping Lever to Split Collar on Pedal Shaft		1	
FG.105/X	**Washer,** Spring, on Setscrew		1	
C.26413	**STEADY BAR, BETWEEN ACCELERATOR PEDAL SHAFT AND CONNECTING LINK**	11—29	1	
C.11651	**CONNECTING LINK ASSEMBLY**	11—30	1	
C.11649	**Pivot Pin,** in Inlet Manifold, holding Connecting Link	11—31	1	
C.725	**Washer,** Shakeproof, behind Pivot Pin	11—32	1	
L.102.5/8U	**Split Pin,** securing Connecting Link to Pivot Pin		1	
FW.105/T	**Washer,** Plain, behind Split Pin		1	
BD.1708/1	**Washer,** Double Coil Spring, behind Plain Washer		1	
C.15499	**BELL CRANK LEVER ASSEMBLY**	11—33	1	
UFB.125/8R	**Bolt,** securing Bell Crank Lever and Steady Bar in Connecting Link		1	
C.13561	**Spacing Washer,** between Bell Crank Lever and Steady Bar		1	
C.8667/1	**Nut,** Self-Locking, on Bolt		1	
C.26411	**CONTROL ROD ASSEMBLY, LINKING OPERATING LEVER AND BELL CRANK LEVER**	11—34	1	
L.103/7U	**Split Pin,** securing Control Rod to Levers		2	
FW.104/T	**Washer,** Plain, behind Split Pin		2	
BD.1708/5	**Washer,** Double Coil Spring, behind Plain Washer		2	
C.27383	**CONTROL ROD, LINKING KICK-DOWN RELAY SHAFT LEVER AND LEVER ON REAR CARBURETTER**	11—35	1	
C.27385	**Trunnion,** in Lever on Rear Carburetter	11—36	1	
C.27384	**Sleeve Nut,** in Trunnion	11—37	1	
C.27389	**Circlip,** retaining Sleeve Nut in Trunnion	11—38	1	
UFN.119/L	**Nut,** locking Control Rod in Sleeve Nut	11—39	1	
C.13824	**Clip,** securing Control Rod to Lever on Kickdown Relay Shaft	11—40	1	
C.27751	**SUPPORT BRACKET AND KICK-DOWN RELAY SHAFT ASSEMBLY**	11—41	1	
C.27753	**Relay Shaft Assembly**		1	
C.24334	**Relay Lever,** operating Kickdown Cable		1	
422524/08	**Pin,** securing Relay Lever to Relay Shaft		1	

SECTION 11

ACCELERATOR CONTROLS

AUTOMATIC TRANSMISSION (R. H. DRIVE CARS ONLY)

Part No.	Description	Plate No.	No. per Unit	Remarks
C.26756/3	**KICKDOWN CABLE ASSEMBLY**	11—42	1	
C.24026	**Fork End,** connecting Inner Cable to Relay Lever	11—43	1	
UFN.119/L	**Nut,** locking Fork End on Cable	11—44	1	
J.103/8S	**Clevis Pin,** securing Fork End to Relay Lever	11—45	1	
BD.541/28	**Washer,** Special, under head of Clevis Pin	11—46	1	
L.102/4U	**Split Pin,** securing Clevis Pin in Fork End	11—47	1	
C.15830	**Washer,** Special, behind Split Pin	11—48	1	
C.25801	**Location Bracket,** retaining Kick-down Cable to Support Bracket	11—49	1	
UFS.119/3R	**Screw,** Set, securing Location Bracket to Support Bracket		1	
C.8667/17	**Nut,** Self-Locking, on Setscrew		1	
C.25100	**Spring Clip,** securing Inner Cable to Kick-down Mechanism	11—50	1	
C.24039	**" O " Ring,** on Cable Stop at Transmission Unit	11—51	1	
FW.104/T	**Washer,** Plain, retaining Cable Assembly to Transmission Unit	11—52	1	
C.25031	**Screw,** Socket, securing Washer to Transmission Unit	11—53	1	

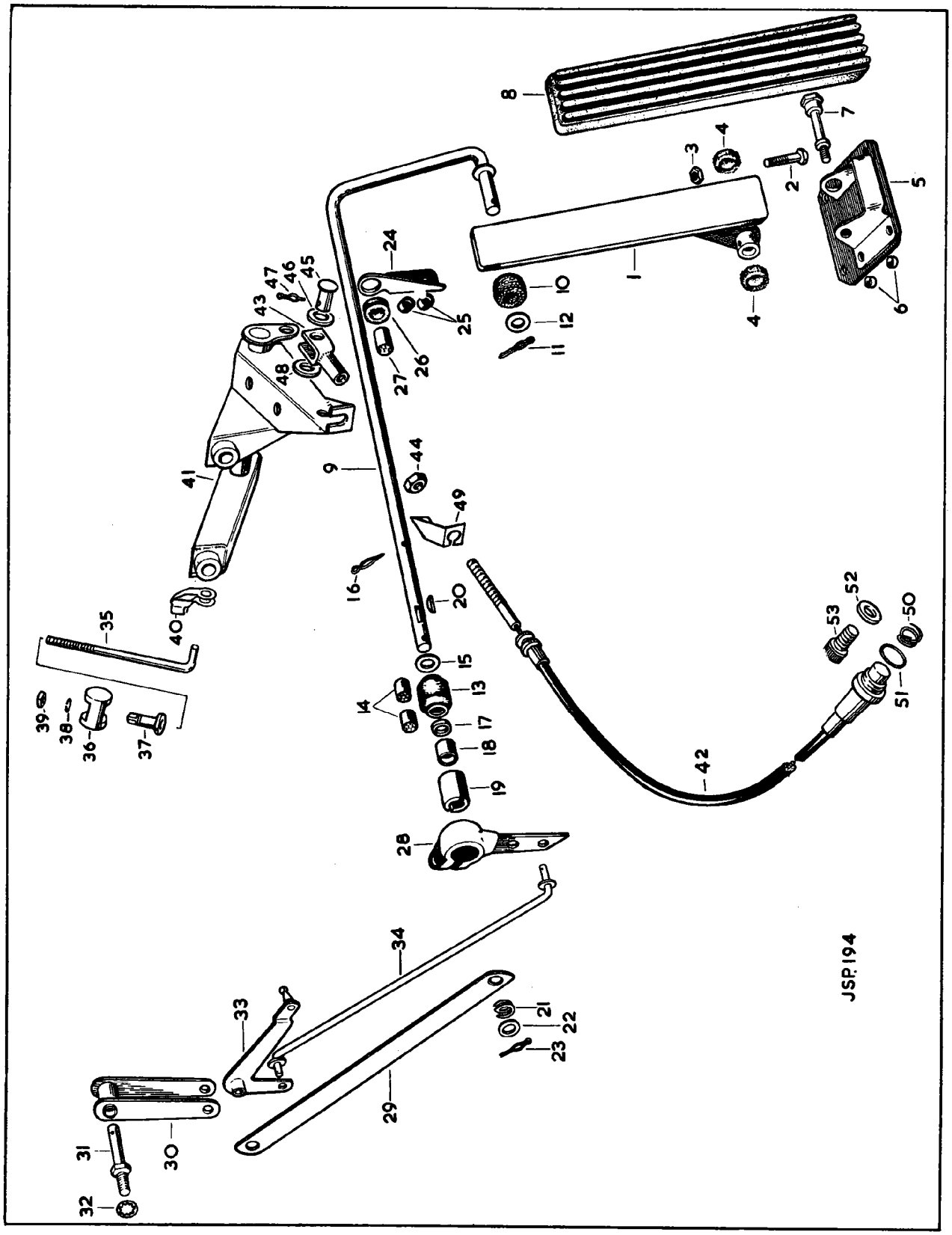

PLATE 11

SECTION 12

ACCELERATOR CONTROLS

AUTOMATIC TRANSMISSION (L. H. DRIVE CARS ONLY)

Part No.	Description	Plate No.	No. per Unit	Remarks
C.13934	**ACCELERATOR PEDAL ASSEMBLY**	12—1	1	
UFS.125/11R	**Screw,** Set, restricting Pedal Travel	12—2	1	
UFN.125/L	**Nut,** on Setscrew	12—3	1	
C.3479	**Felt Washer,** at each side of Pedal Boss	12—4	2	
C.13387	**BRACKET ASSEMBLY, MOUNTING ACCELERATOR PEDAL TO FLOOR**	12—5	1	
BD.8291/2	**Screw,** Set, securing Mounting Bracket to Floor		4	
FG.104/X	**Washer,** Spring, on Setscrews		4	
C.6969	**Fulcrum Pin,** securing Accelerator Pedal to Mounting Bracket	12—6	1	
C.8737/1	**Nut,** Self-locking, on Fulcrum Pin		1	
FW.104/T	**Washer,** Plain, under Nut		1	
C.11671	**PAD (RUBBER) ON ACCELERATOR PEDAL**	12—7	1	
C.22246	**ACCELERATOR PEDAL SHAFT ASSEMBLY**	12—8	1	
C.12486	**Roller,** on Accelerator Pedal Shaft	12—9	1	
L.102.5/8U	**Split Pin,** securing Roller to Shaft	12—10	1	
C.386	**Washer,** Special, behind Split Pin	12—11	1	
BD.1814/2	**Pop Rivet,** securing Spherical Bearing on Pedal Shaft to L.H. side of Dash		3	
C.13536	**OPERATING LEVER AT END OF ACCELERATOR PEDAL SHAFT**	12—12	1	
UFS.131/7R	**Screw,** Set, clamping Lever to Pedal Shaft		1	
FG.105/X	**Washer,** Spring, on Setscrew		1	
C.13308	**SPHERICAL BEARING ASSEMBLY FOR ACCELERATOR PEDAL SHAFT AT R.H. SIDE OF DASH**	12—13	1	
BD.1814/6	**Pop Rivet,** securing Spherical Bearing to R.H. Side of Dash		3	
C.13316	**Distance Washer,** behind Bearing on Pedal Shaft at R.H. side of Dash	12—14	1	
BD.1708/2	**Washer,** Double Coil Spring, behind Distance Washer	12—15	1	
FW.106/T	**Washer,** Plain, behind Spring Washer	12—16	1	
L.102.5/6U	**Split Pin,** through Pedal Shaft	12—17	1	
C.27706	**STEADY BAR ASSEMBLY BETWEEN ACCELERATOR PEDAL SHAFT AND CONNECTING LINK**	12—18	1	

ACCELERATOR CONTROLS

AUTOMATIC TRANSMISSION (L. H. DRIVE CARS ONLY)

Part No.	Description	Plate No.	No. per Unit	Remarks
C.11651	**CONNECTING LINK ASSEMBLY**	12—19	1	
C.11649	**Pivot Pin,** in Inlet Manifold, holding Connecting Link	12—20	1	
C.725	**Washer,** Shakeproof, behind Pivot Pin	12—21	1	
L.102.5/8U	**Split Pin,** securing Connecting Link to Pivot Pin		1	
FW.105/T	**Washer,** Plain, behind Split Pin		1	
BD.1708/1	**Washer,** Double Coil Spring, behind Spring Washer		1	
C.15499	**BELL CRANK LEVER ASSEMBLY**	12—22	1	
UFB.125/8R	**Bolt,** securing Bell Crank Lever and Steady Bar in Connecting Link		1	
C.13561	**Spacing Washer,** between Bell Crank Lever and Steady Bar		1	
C.8667/1	**Nut,** Self-Locking, on Bolt		1	
C.27705	**CONTROL ROD ASSEMBLY, LINKING OPERATING LEVER AND BELL CRANK LEVER**	12—23	1	
L.103/7U	**Split Pin,** securing Control Rod to Levers		2	
FW.104/T	**Washer,** Plain, behind Split Pins		2	
BD.1708/5	**Washer,** Double Coil Spring, behind Plain Washers		2	
C.27383	**CONTROL ROD, LINKING KICK-DOWN RELAY SHAFT LEVER AND LEVER ON REAR CARBURETTER**	12—24	1	
C.27385	**Trunnion,** in Lever on Rear Carburetter	12—25	1	
C.27384	**Sleeve Nut,** in Trunnion	12—26	1	
C.27389	**Circlip,** retaining Sleeve Nut in Trunnion	12—27	1	
UFN.119/L	**Nut,** locking Control Rod in Sleeve Nut	12—28	1	
C.13824	**Clip,** securing Control Rod to Lever on Kick-Down Relay Shaft	12—29	1	
C.27751	**SUPPORT BRACKET AND KICK-DOWN RELAY SHAFT ASSEMBLY**	12—30	1	
C.27753	**Relay Shaft Assembly**		1	
C.24334	**Relay Lever,** operating Kick-Down Cable		1	
422524/08	**Pin,** securing Relay Lever to Relay Shaft		1	

SECTION 12

ACCELERATOR CONTROLS

AUTOMATIC TRANSMISSION (L. H. DRIVE CARS ONLY)

Part No.	Description	Plate No.	No. per Unit	Remarks
C.26756/3	**KICK-DOWN CABLE ASSEMBLY**	12—31	1	
C.24026	**Fork End,** connecting Inner Cable to Relay Lever	12—32	1	
UFN.119/L	**Nut,** locking Fork End to Cable	12—33	1	
J.103/8S	**Clevis Pin,** securing Fork End to Relay Lever	12—34	1	
BD.541/28	**Washer,** Special, under head of Clevis Pin	12—35	1	
L.102/4U	**Split Pin,** securing Clevis Pin in Fork End	12—36	1	
C.15830	**Washer,** Special, behind Split Pin	12—37	1	
C.25801	**Location Bracket,** retaining Kick-down Cable to Support Bracket	12—38	1	
UFS.119/3R	**Screw,** Set, securing Location Bracket to Support Bracket		1	
C.8667/17	**Nut,** Self-Locking, on Setscrew		1	
C.25100	**Spring Clip,** securing Inner Cable to Kick-down Mechanism	12—39	1	
C.24039	**" O " Ring,** on Cable Stop at Transmission Unit	12—40	1	
FW.104/T	**Washer,** Plain, retaining Cable Assembly to Transmission Unit	12—41	1	
C.25031	**Screw,** Socket, securing Washer to Transmission Unit	12—42	1	

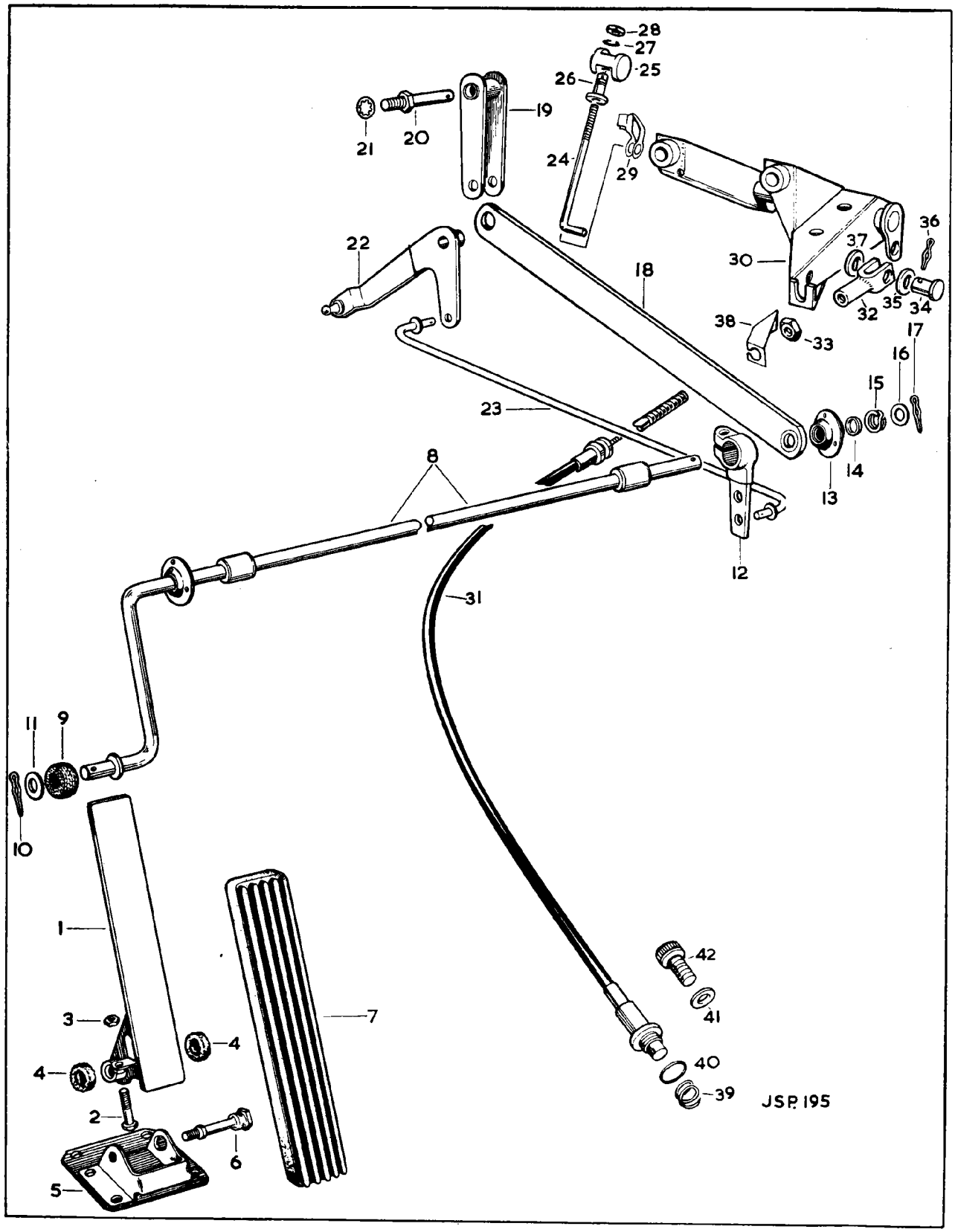
28
27
25
26
19
21
20
24
29
22
18
30
36
37
35
34
32
38
33
17
16
15
23
14
13
8
12
31
11
9
10
1
7
42
41
3
4
4
40
39
2
6
5
JSP.195

PLATE 12

SECTION 42

FUEL SYSTEM

Part No.	Description	Plate No.	No. per Unit	Remarks
C.22470	**R.H. PETROL TANK ASSEMBLY**	44—1	1	
C.990/1	**Petrol Filter Assembly,** at bottom of Petrol Tank	44—2	1	
C.26310	**Washer,** on Petrol Filter	46—3	1	
C.23005/3	**Sleeve,** connecting Front Vent Pipe to Filler Neck		1	
C.22469	**L.H. PETROL TANK ASSEMBLY**	44—4	1	
C.990/1	**Petrol Filter Assembly,** at bottom of Petrol Tank	44—5	1	
C.26310	**Washer,** on Petrol Filter	44—6	1	
C.23005/3	**Sleeve,** connecting Front Vent Pipe to Filler Neck		1	
C.25089/1	**TUBE CONNECTING FRONT AND REAR VENT PIPES**	44—7	2	
C.23601	**PETROL FILLER CAP ASSEMBLY**	44—8	2	
C.23603	**Sealing Ring,** in Filler Cap	44—9	2	
C.23604	**Spring Clip,** locking Filler Caps to Petrol Filler Necks		2	
UCS.819/3H	**Screw,** Set, securing Spring Clips to Filler Caps		2	
AG.102/X	**Washer,** Spring, on Setscrews		2	
C.26211	**PETROL GAUGE ELEMENT UNIT IN R.H. PETROL TANK (TBS.5114/001)**	44—10	1	**See also Electrical Equipment**
C.26212	**PETROL GAUGE ELEMENT UNIT IN L.H. PETROL TANK (TBS.5114/000)**	44—11	1	
C.22054	**Rubber Seal,** between Element Units and Petrol Tanks (31-781-538)	44—12	2	
C.22053	**Locking Ring,** securing Element Units to Petrol Tanks (31-634-583-01)	44—13	2	
C.22642	**Cover Plate,** over Element Unit Apertures	44—14	2	
C.26213	**Sealing Pad,** under Cover Plates	44—15	2	
C.26214	**Spacer,** under Cover Plates	44—16	2	
C.23026	**Nyloc Cap Nut,** securing Cover Plates	44—17	2	
BD.5453	**Washer** (Fibre) under Cap Nuts	44—18	2	
C.23035	**Grommet,** over Electrical Cables in Cover Plates	44—19	2	
BD.25253	**CRADLE ASSEMBLY SUPPORTING R.H. PETROL TANK AT FRONT**	44—20	1	
BD.25255	**CRADLE ASSEMBLY SUPPORTING R.H. PETROL TANK AT REAR**	44—21	1	
BD.25254	**CRADLE ASSEMBLY SUPPORTING L.H. PETROL TANK AT FRONT**	44—22	1	

Part No.	Description	Plate No.	No. per Unit	Remarks
BD.25256	**CRADLE ASSEMBLY SUPPORTING L.H. PETROL TANK AT REAR**	44—23	1	
BD.9604/5	**Screw,** Set, securing Cradles to Body		4	
FG.106/X	**Washer,** Spring, on Setscrews		4	
C.410	**Washer,** Special Plain, under Spring Washers		4	
BD.28139/1	**LOCATING PAD, BETWEEN PETROL TANKS AND BODY**	44—24	6	
C.22615	**SEALING RING, ON PETROL FEED PIPES, BETWEEN TANKS AND BODY**	44—25	2	
C.22458	**PETROL PUMP ASSEMBLY (AUF.301)**	44—26	2	**See also Electrical Equipment**
C.22547	**CLIP, AROUND PETROL PUMPS**	44—27	2	
C.23361	**Packing** (Rubber) inside Clips	44—28	2	
UFB.125/10R	**Bolt,** through Clips		2	
C.8667/1	**Nut,** Self-Locking, on Bolts		2	
C.24792	**Mounting** (Rubber) fixing Petrol Pump Clips to Body	44—29	4	
UFN.125/L	**Nut,** securing Clips to Rubber Mountings		4	
C.724	**Washer,** Shakeproof, under Nuts		4	
FW.104/T	**Washer,** Plain, under Shakeproof Washers		4	
C.22617	**PETROL PIPE ASSEMBLY FROM PETROL TANKS TO PETROL PUMPS**	44—30	2	
C.11488	**Banjo Bolt,** securing Pipes to Petrol Pumps (AUC.2698)	44—31	2	
C.11489	**Washer** (Fibre) at each side of Banjos (AUC.2141)	44—32	4	
C.22901	**PETROL PIPE ASSEMBLY FROM R.H. PETROL PUMP TO T-PIECE**	44—33	1	
C.22905	**PETROL PIPE ASSEMBLY FROM L.H. PETROL PUMP TO T-PIECE**	44—34	1	
C.11488	**Banjo Bolt,** securing Pipes to Petrol Pumps (AUC.2698)	44—35	2	
C.11489	**Washer** (Fibre) at each side of Banjos (AUC.2141)	44—36	4	
C.1040/6	**Clip,** securing Petrol Pipes in Boot (1B7004)	44—37	5	
DZZ.410/10C	**Screw,** Self-Tapping, securing Clips		5	
C.21868	**T-PIECE, CONNECTING PETROL PIPES (A.94063)**	44—38	1	

SECTION 42

FUEL SYSTEM

Part No.	Description	Plate No.	No. per Unit	Remarks
C.26950	**PETROL PIPE ASSEMBLY, FROM T-PIECE TO PETROL FILTER**	44—39	1	
C.1040/6	**Clip,** securing Petrol Pipe in Boot and to Longitudinal Member and Valance	44—40	5	
DZZ.410/6C	**Screw,** Self-Tapping, securing Clips		5	
C.17432	**Grommet,** for Petrol Pipe, through Boot Floor and Rear Cross Member (863123)	44—41	2	
C.26389	**PETROL FILTER ASSEMBLY (AC.7971136)**	44—42	1	
11450	**Filter Casting** (7971137)	44—43	1	
7298	**Sealing Washer,** between Filter Casting and Glass Bowl (5593321)	44—44	1	
11451	**Filter Gauze** (7971138)	44—45	1	
7300	**Glass Bowl** (1523620)	44—46	1	
7301	**Retaining Strap Assembly** (5592050)	44—47	1	
UFS.131/6R	**Screw,** Set, securing Petrol Filter to Valance		2	
FG.105/X	**Washer,** Spring, on Setscrews		2	
C.26906	**FEED PIPE ASSEMBLY, LINKING PETROL FILTER WITH CARBURETTERS**	44—48	1	**See also Carburetters and Petrol Filter**
C.11488	**Banjo Bolt,** securing Feed Pipe to Float Chambers (AUC.2698)	44—49	2	
C.11489	**Washer** (Fibre) at each side of Banjos (AUC.2141)	44—50	4	

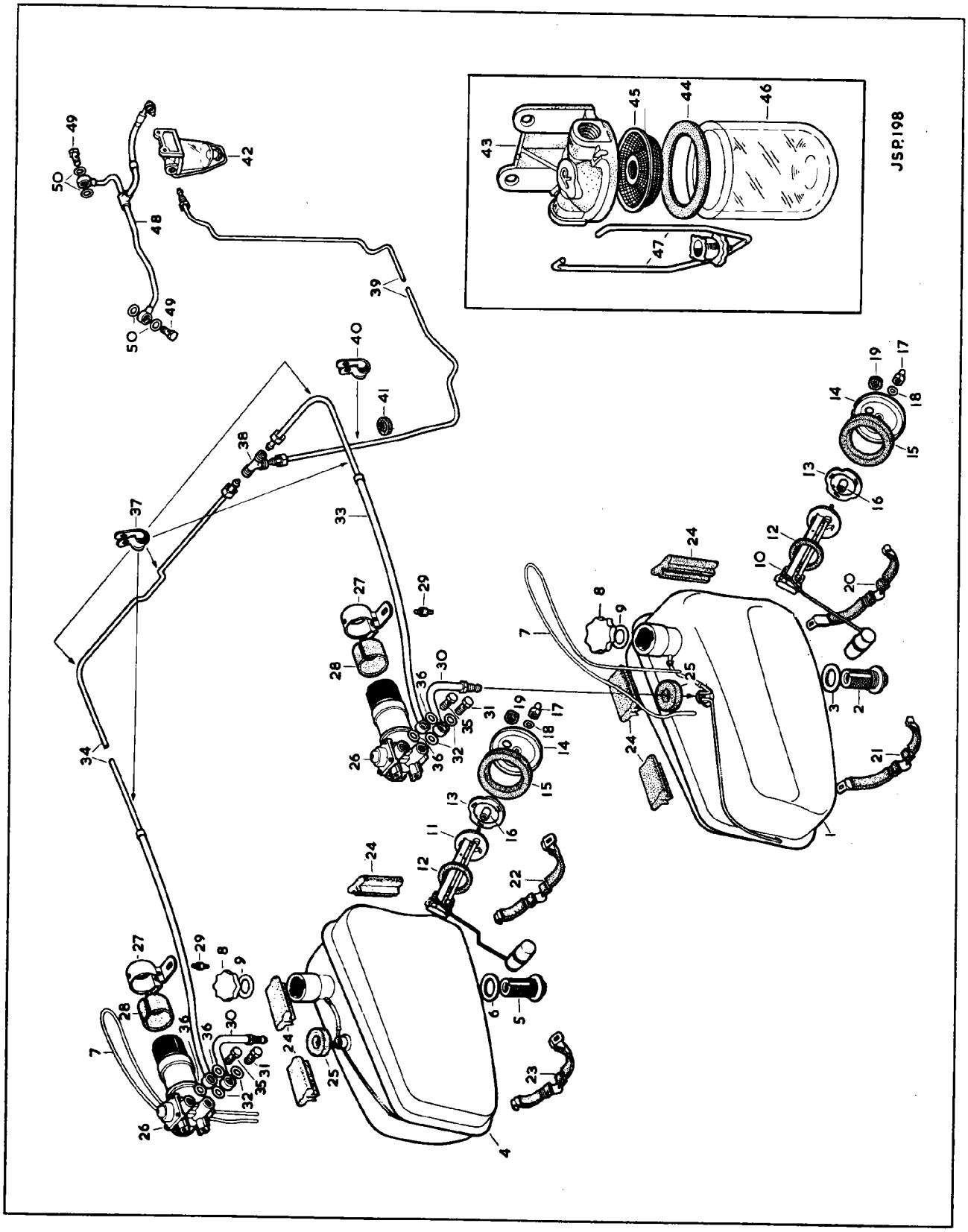

PLATE 44

SECTION 41

EXHAUST SYSTEM

Part No.	Description	Plate No.	No. per Unit	Remarks
C.22311	**FRONT DOWN PIPE ASSEMBLY FROM MANIFOLD TO SILENCER**	43—1	1	
C.1759	**Flexible Pipe,** on Down Pipe (12" long)	43—1A	1	
C.18401	**Flange,** on Down Pipe		1	
C.22313	**REAR DOWN PIPE ASSEMBLY FROM MANIFOLD TO SILENCER**	43—2	1	
C.1759	**Flexible Pipe,** on Down Pipe (12" long)	43—2A	1	
C.18401	**Flange,** on Down Pipe		1	
C.18405/1	**Sealing Ring,** between Down Pipes and Exhaust Manifolds	43—3	2	**See also Cylinder Head**
C.17916	**Nut,** Special, securing Down Pipes to Exhaust Manifolds		8	
FW.106/T	**Washer,** Plain, under Nuts		8	
UFN.131/L	**Nut,** securing Down Pipe to Clutch Housing Support Bracket		1	
C.725	**Washer,** Shakeproof, under Nut		1	
FW.105/T	**Washer,** Plain, under Shakeproof Washer		1	
UFS.131/6R	**Screw,** Set, securing Front Down Pipe to Rear Down Pipe		1	
UFN.131/L	**Nut,** on Setscrew		1	
C.725	**Washer,** Shakeproof, under Nut		1	
FW.105/T	**Washer,** Plain, under Shakeproof Washer		1	
C.13063	**CLIP, SECURING DOWN PIPES TO FRONT SILENCER**	43—4	2	
UFB.131/22R	**Bolt,** through Clips		2	
UFN.131/L	**Nut,** on Bolts		2	
FW.105/T	**Washer,** Plain, on Bolts		4	
C.22800	**FRONT SILENCER ASSEMBLY**	43—5	1	
C.23585	**Shield,** protecting Body from Exhaust Heat		1	
UFS.125/4R	**Screw,** Set, securing Heat Shield to Body		3	
C.724	**Washer,** Shakeproof, on Setscrews		3	
DAZ.410/8C	**Screw,** Self-Tapping, securing Heat Shield to Body		3	
C.22322	**FRONT INTERMEDIATE PIPE ASSEMBLY, R.H.**	43—6	1	
C.22324	**FRONT INTERMEDIATE PIPE ASSEMBLY, L.H.**	43—7	1	
C.13063	**CLIP, SECURING FRONT INTERMEDIATE PIPES TO FRONT AND MAIN SILENCERS**	43—8	4	
UFB.131/22R	**Bolt,** through Clips		4	
UFN.131/L	**Nut,** on Bolts		4	
FW.105/T	**Washer,** Plain, under Nuts		8	

EXHAUST SYSTEM

Part No.	Description	Plate No.	No. per Unit	Remarks
1363	**RUBBER MOUNTING FOR SUSPENSION OF FRONT INTERMEDIATE PIPES TO BODY**	43—9	2	
UFS.131/5R	**Screw,** Set, securing Rubber Mountings to Body		4	
UFN.131/L	**Nut,** on Setscrews		4	
C.725	**Washer,** Shakeproof, under Nuts		4	
FW.105/T	**Washer,** Plain, under Shakeproof Washers		4	
UFB.131/10R	**Bolt,** securing Front Intermediate Pipes to Rubber Mountings		2	
C.19977	**Heat Shield,** protecting R.H. Rubber Mounting	43—10	1	
C.19978	**Heat Shield,** protecting L.H. Rubber Mounting	43—11	1	
BD.541/37	**Washer,** Special, on Bolts		2	
C.19979	**Washer** (Insulating) on Bolts	43—12	4	
C.19980	**Distance Collar** (Insulating) on Bolts	43—13	2	
C.8667/2	**Nut,** Self-locking, on Bolts		2	
FW.105/T	**Washer,** Plain, under Nuts		2	
C.22801	**MAIN SILENCER ASSEMBLY, R.H.**	43—14	1	
C.22802	**MAIN SILENCER ASSEMBLY, L.H.**	43—15	1	
C.19632	**RUBBER MOUNTING, FIXING MAIN SILENCERS TO REAR SUSPENSION CROSS MEMBER**	43—16	2	
C.19631	**Bracket,** retaining Rubber Mounting	43—17	2	
UFS.125/5R	**Screw,** Set, securing Brackets to Rear Suspension Cross Member		4	
UFN.125/L	**Nut,** on Setscrews		4	
C.724	**Washer,** Shakeproof, under Nuts		4	
C.26559	**REAR SILENCER AND TAIL PIPE ASSEMBLY, R.H.**	43—18	1	
C.22331	**Rear Intermediate Pipe,** R.H.	43—19	1	
C.22803	**Rear Silencer**	43—20	1	
C.24299	**Tail Pipe Assembly**	43—21	1	
C.26560	**REAR SILENCER AND TAIL PIPE ASSEMBLY, L.H.**	43—22	1	
C.22332	**Rear Intermediate Pipe,** L.H.	43—23	1	
C.22803	**Rear Silencer**	43—24	1	
C.24299	**Tail Pipe Assembly**	43—25	1	
C.13063	**CLIP, SECURING REAR SILENCER AND TAIL PIPE ASSEMBLY TO MAIN SILENCER**	43—26	2	
UFB.131/22R	**Bolt,** through Clips		2	
UFN.131/L	**Nut,** on Bolts		2	
FW.105/T	**Washer,** Plain, under Nuts		4	

SECTION 41

EXHAUST SYSTEM

Part No.	Description	Plate No.	No. per Unit	Remarks
C.22410	**RUBBER MOUNTING, UNDER BOOT FLOOR, FIXING REAR SILENCER AND TAIL PIPE ASSEMBLY**	43—27	2	
C.23262	**Ring Bracket,** for Rubber Mountings	43—28	2	
UFS.131/5R	**Screw,** Set, securing Ring Brackets to Boot Floor		4	
FG.105/X	**Washer,** Spring, on Setscrews		4	
C.26561	**TAIL PIPE EXTENSION (CHROME PLATED)**	43—29	2	
DA.406/6S	**Screw,** Self-Tapping, securing Extensions to Tail Pipes		4	

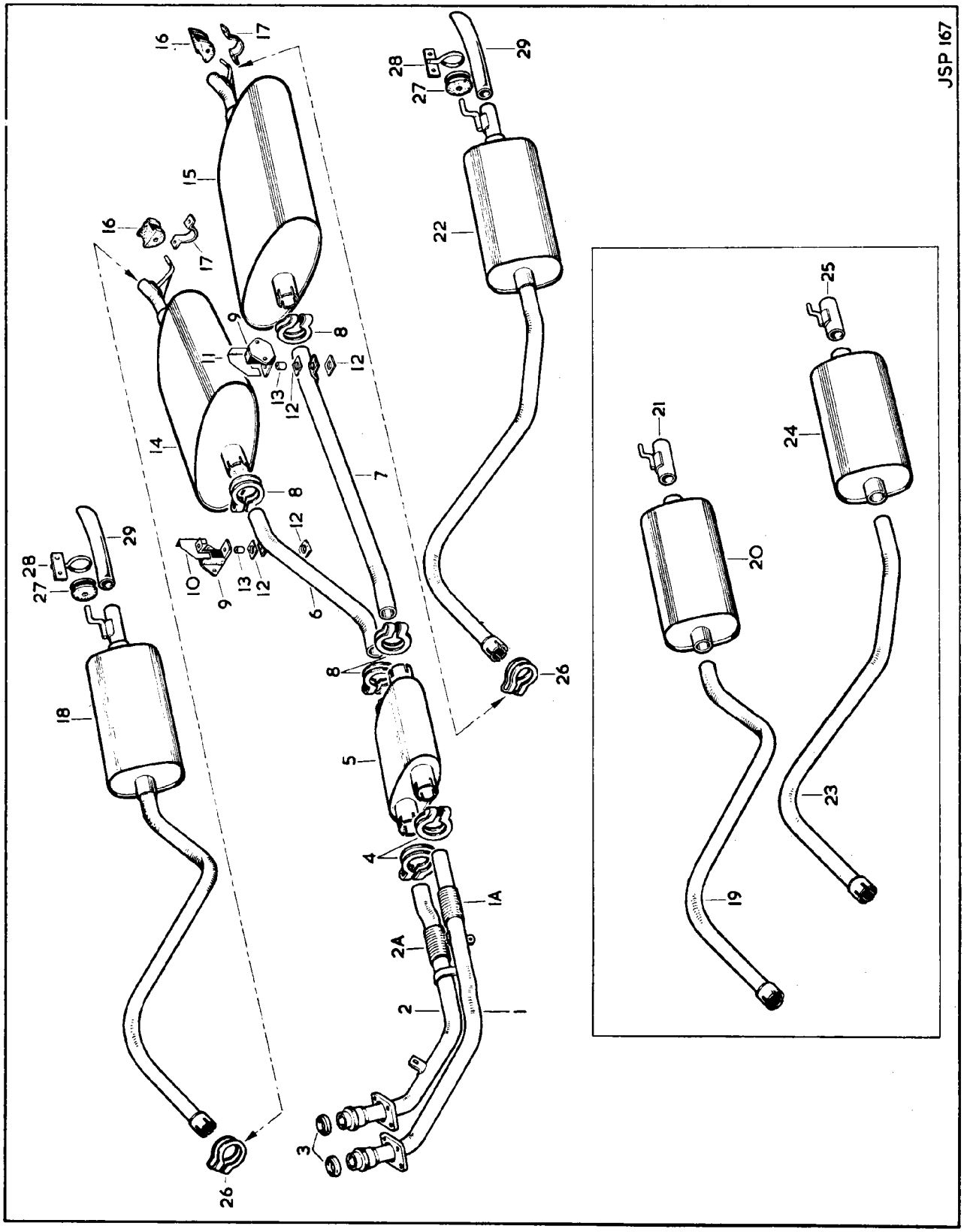
JSP 167
1
1A
2
2A
3
4
5
6
7
8
9
10
11
12
13
14
15
16
17
18
19
20
21
22
23
24
25
26
27
28
29

PLATE 43

SECTION 40

COOLING SYSTEM

Part No.	Description	Plate No.	No. per Unit	Remarks
C.26755	**RADIATOR BLOCK ASSEMBLY**	42—1	1	
C.8975	**Mounting Pad** (Rubber) for Radiator	42—2	4	
C.8976	**Distance Tube,** through Rubber Pads	42—3	2	
UFB.137/10R	**Bolt,** securing Radiator at bottom		2	
C.410	**Washer,** Special, on Bolts	42—4	2	
C.27033	**R.H. BRACKET, MOUNTING RADIATOR AT TOP**	42—5	1	
C.27034	**L.H. BRACKET, MOUNTING RADIATOR AT TOP**	42—6	1	
C.975	**Grommet,** in Mounting Brackets	42—7	2	
C.22149/1	**Distance Tube,** through Grommets	42—8	2	
C.8737/2	**Nut,** Self-Locking, securing Mounting Brackets to Radiator		2	
BD.541/1	**Washer,** Special, under Nuts	42—9	2	
UFS.131/4R	**Screw,** Set, securing Brackets to Body		2	
C.725	**Washer,** Shakeproof, on Setscrews		2	
FW.105/T	**Washer,** Plain, under Shakeproof Washers		2	
C.27049	**DRAIN TAP ASSEMBLY FOR RADIATOR BLOCK**	42—10	1	
C.981	**Washer** (Fibre) on Drain Tap	42—11	As req'd	
C.19798/4	**Tube** (Rubber) on Drain Tap	42—12	1	
C.1040/2	**Clip,** at R.H. Engine Support Bracket, securing Rubber Tube	42—13	1	
C.27051	**CONTROL ROD ASSEMBLY, OPERATING DRAIN TAP**	42—14	1	
C.1042	**Grommet,** on Control Rod	42—15	1	
L.103/7U	**Split Pin,** securing Control Rod to Drain Tap	42—16	1	
C.26871	**RADIATOR HEADER TANK ASSEMBLY**	44—17	1	
C.18460	**Filler Cap** (4 lb Pressure)	42—18	1	**NOT REQUIRED WHEN AIR CONDITIONING IS FITTED**
C.19798/3	**Overflow Pipe** (Rubber) for Header Tank	42—19	1	
C.1040/12	**Clip,** at fixings of R.H. Fan Cowl, securing Overflow Pipe	42—20	2	
UFS.125/6R	**Screw,** Set, securing Header Tank to Radiator		4	
FG.104/X	**Washer,** Spring, on Setscrews		4	
C.27759	**Packing** (Aluminium) under Header Tank	42—21	2	
C.26876	**FAN COWL, R.H.**	42—22	1	
C.26875	**FAN COWL, L.H.**	42—23	1	
UFS.119/6R	**Screw,** Set, securing Fan Cowls together		1	
C.8667/17	**Nut,** Self-Locking, on Setscrew		1	

Part No.	Description	Plate No.	No. per Unit	Remarks
BD.541/13	**Washer**, Plain, on Setscrew		2	
UFS.125/5R	**Screw**, Set, securing Fan Cowls to Radiator		4	
1861	**Washer**, Plain, on Setscrews		4	
BD.30396/1	**SEAL (RUBBER) AT TOP OF RADIATOR**	42—24	1	
C.27192	**Support Strip**, for Seal	42—25	1	
C.27193	**SEAL (CANVAS/RUBBER) AT BOTTOM OF RADIATOR**	42—26	1	
BD.30454	**Clip**, securing Seal to Radiator	42—27	4	
BD.30441	**SEAL (CANVAS/RUBBER) AT SIDES OF RADIATOR**	42—28	2	
BD.22686	**Stud**, securing Side Seals to Body	42—29	8	
C.26853	**BY-PASS WATER HOSE**	42—30	1	
C.2905/8	**Clip**, securing By-Pass Hose	42—31	2	
C.25701	**HOSE FROM ENGINE WATER OUTLET PIPE TO R.H. SIDE OF RADIATOR**	42—32	1	
C.2905/4	**Clip**, securing Hose to Water Outlet Pipe	42—33	1	
C.2905/12	**Clip**, securing Hose to Radiator	42—34	1	
C.26951	**HOSE FROM HEADER TANK TO L.H. SIDE OF RADIATOR**	42—35	1	
C.2905/12	**Clip**, securing Hose	42—36	2	
C.26879	**BOTTOM WATER PIPE**	42—37	1	**NOT REQUIRED WHEN AUTOMATIC TRANSMISSION IS FITTED**
C.26878	**BOTTOM WATER PIPE (INCORPORATING OIL COOLER)**	42—38	1	**REQUIRED ONLY WHEN AUTOMATIC TRANSMISSION IS FITTED**
DAZ.114/12C	**Screw**, Self-Tapping, securing Water Pipe to Underframe		2	
C.2352	**Drain Plug**, in Bottom Water Pipe	42—39	1	
C.784	**Washer** (Fibre) on Drain Plug	42—40	1	

SECTION 40

COOLING SYSTEM

Part No.	Description	Plate No.	No. per Unit	Remarks
C.27035	**HOSE FROM L.H. SIDE OF RADIATOR TO BOTTOM WATER PIPE**	42—41	1	
C.2905/5	**Clip**, securing Hose	42—42	2	
C.27036	**HOSE FROM BOTTOM WATER PIPE TO WATER PUMP**	42—43	1	
C.2905/5	**Clip**, securing Hose to Bottom Water Pipe	42—44	1	
C.2905/7	**Clip**, securing Hose to Water Pump	42—45	1	

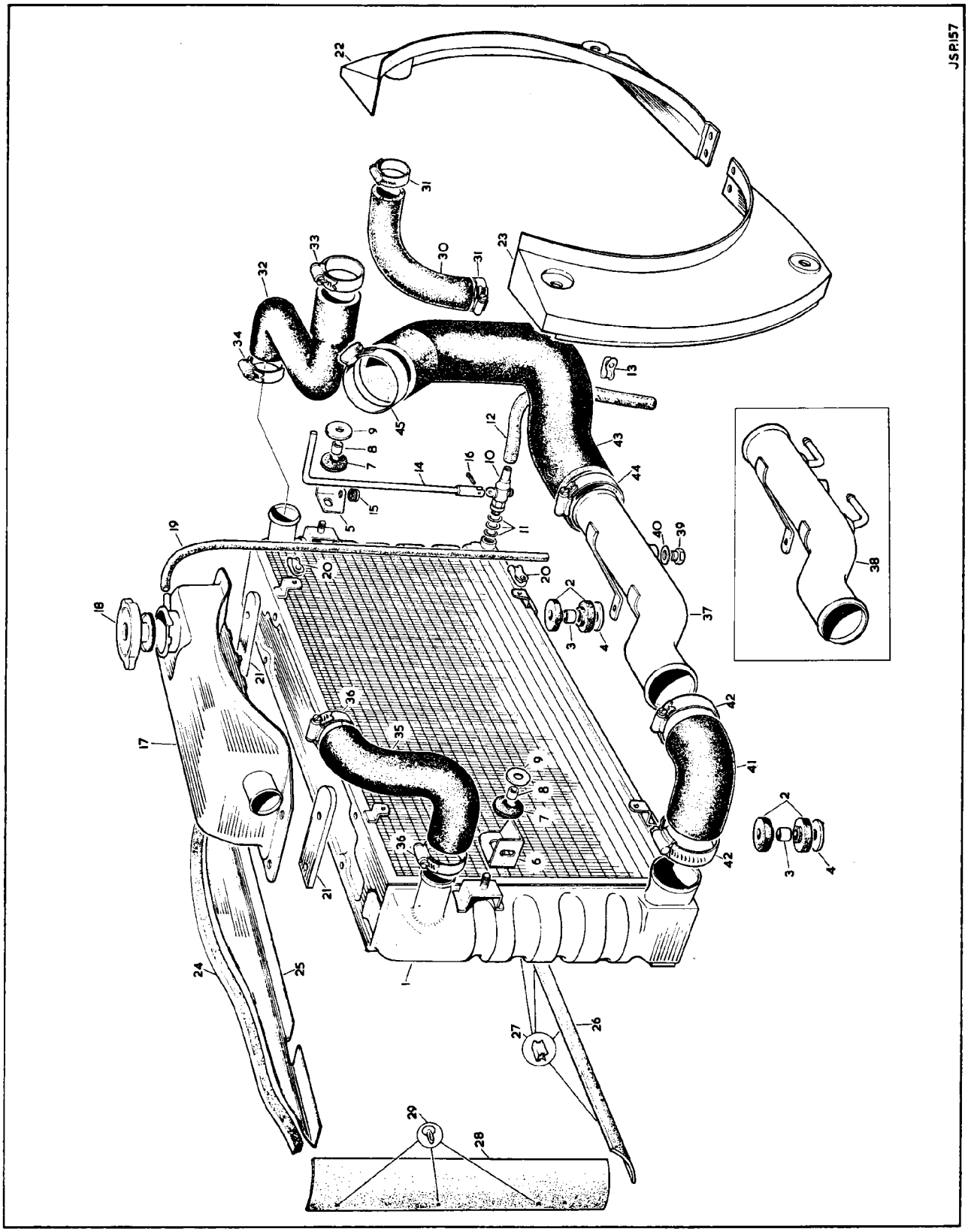

PLATE 42

SECTION 13

CLUTCH UNIT

Part No.	Description	Plate No.	No. per Unit	Remarks
C.27019	**CLUTCH COVER ASSEMBLY (BB.75620/20)**	13—1	1	
11253	**Diaphragm Spring** (75026/10)	13—2	1	
11254	**Fulcrum Ring,** at each side of Diaphragm Spring (75027)	13—3	2	
11255	**Rivet** (Shouldered) locating Diaphragm Spring (75690/12)	13—4	6	
11259	**Rivet** (Shouldered) locating Diaphragm Spring (75328)	13—5	3	
11297	**Release Plate** (75578)	13—6	1	
11299	**Sleeve,** retaining Release Plate to Diaphragm Spring (75621)	13—7	1	
11298	**Belleville Washer,** on Sleeve (75581)	13—8	1	
11260	**Pressure Plate** (75312)	13—9	1	
11261	**Clip,** retaining Pressure Plate to Diaphragm Spring (75309)	13—10	3	
11262	**Bolt,** securing Clips and Drive Straps to Pressure Plate (75387)	13—11	3	
11263	**Tab Washer,** locking Bolts (75104)	13—12	3	
11264	**Balance Weight** (.85 grammes) for Clutch Cover Assembly (75062)	13—13	As req'd	SELECTIVE WEIGHTS
11265	**Balance Weight** (2.13 grammes) for Clutch Cover Assembly (75063)	13—13	As req'd	
11266	**Balance Weight** (4.26 grammes) for Clutch Cover Assembly (75064)	13—13	As req'd	
11267	**Balance Weight** (5.38 grammes) for Clutch Cover Assembly (75065)	13—13	As req'd	
11268	**Balance Weight** (6.51 grammes) for Clutch Cover Assembly (75066)	13—13	As req'd	
11269	**Balance Weight** (7.56 grammes) for Clutch Cover Assembly (75067)	13—13	As req'd	
11270	**Balance Weight** (9.57 grammes) for Clutch Cover Assembly (75068)	13—13	As req'd	
11271	**Balance Weight** (11.57 grammes) for Clutch Cover Assembly (75069)	13—13	As req'd	
11272	**Pop Rivet,** securing Balance Weights to Clutch (75061)	13—14	As req'd	
C.23575	**RELEASE BEARING AND CUP ASSEMBLY (75258)**	13—15	1	
4163	**Retainer,** holding Cup to Operating Fork (41628)	13—16	2	
C.25874	**DRIVEN PLATE ASSEMBLY (53009/11)**	13—17	1	
11273	**Facings Package** (comprising Clutch Linings and Rivets) (SSC.75925)		1	
C.8631	**Dowel,** locating Clutch Cover to Flywheel	13—18	3	
UFS.131/6.5 R	**Screw,** Set, securing Clutch Unit to Flywheel		6	
FG.105/X	**Washer,** Spring, on Setscrews		6	
C.23965/1	**Balance Weight** (.036" thick) for Clutch	13—19	As req'd	SELECTIVE WEIGHTS
C.23965/2	**Balance Weight** (.064" thick) for Clutch	13—19	As req'd	
C.23965/3	**Balance Weight** (.104" thick) for Clutch	13—19	As req'd	
C.23965/4	**Balance Weight** (.128" thick) for Clutch	13—19	As req'd	

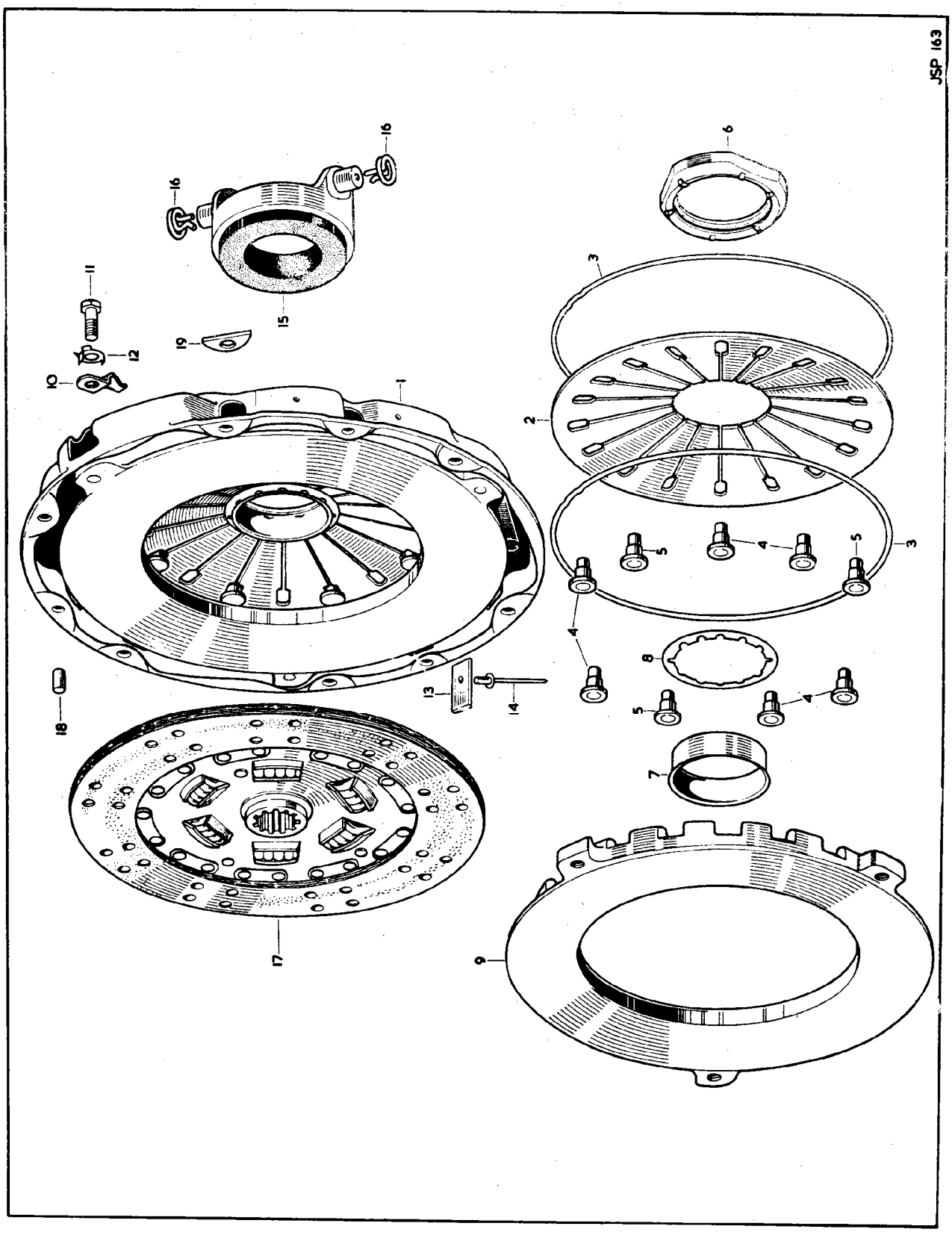

PLATE 13

CLUTCH CONTROLS

Part No.	Description	Plate No.	No. per Unit	Remarks
C.13246	**CLUTCH PEDAL (COMPLETE WITH BUSHES)**	14—1	1	**R.H. DRIVE CARS ONLY**
C.20955/4	**Bush,** in Clutch Pedal Boss		2	
C.13248	**CLUTCH PEDAL (COMPLETE WITH BUSHES)**		1	**L.H. DRIVE CARS ONLY**
C.20955/4	**Bush,** in Clutch Pedal Boss		2	
C.23410	**PAD ASSEMBLY (STEEL) ON CLUTCH PEDAL**	14—2	1	**R.H. DRIVE CARS ONLY**
C.14852	**PAD ASSEMBLY (STEEL) ON CLUTCH PEDAL**		1	**L.H. DRIVE CARS ONLY**
C.8667/2	**Nut,** Self-Locking, securing Pad to Pedal		1	
C.8969	**PAD (RUBBER) FOR CLUTCH PEDAL**	14—3	1	
C.26829	**PEDAL HOUSING**	14—4	1	**R.H. DRIVE CARS ONLY** **See also Brake Controls**
C.26766	**PEDAL HOUSING**		1	**L.H. DRIVE CARS ONLY** **See also Brake Controls**
C.8954	**Stud,** mounting Housing to Scuttle	14—5	5	
C.18203	**Stud,** mounting Housing to Scuttle	14—6	2	
UFN.131/L	**Nut,** on Studs		7	
C.725	**Washer,** Shakeproof, under Nuts		7	
C.8957	**Gasket,** between Housing and Scuttle	14—7	1	
C.8958	**SHAFT, IN HOUSING, SUPPORTING CLUTCH (AND BRAKE) PEDAL**	14—8	1	**See also Brake Controls**
C.8962	**Washer** (Fibre) on Shaft, at each side of Clutch Pedal Boss	14—9	2	
C.8963	**Return Spring,** on Shaft, for Clutch Pedal	14—10	1	
C.8967	**Bolt,** securing Shaft in Housing	14—11	1	
C.8737/1	**Nut,** Self-Locking, on Bolt		1	
FW.104/T	**Washer,** Plain, under Nut		1	

SECTION 14

CLUTCH CONTROLS

Part No.	Description	Plate No.	No. per Unit	Remarks
C.26960	**CLUTCH MASTER CYLINDER (4223-078)**	14—12	1	**R.H. DRIVE CARS ONLY**
11443	**Barrel and Tank Assembly** (4221-517)	14—13	1	
11447	**Filler Cap** (3847-218)	14—14	1	
6459	**Return Spring** (85844)	14—15	1	
9025	**Retainer,** at bottom of Return Spring (92118)	14—16	1	
6449	**Seal** (85641)	14—17	1	
9026	**Disc,** between Seal and Piston (90897)	14—18	1	
6446	**Piston** (85486)	14—19	1	
6447	**Secondary Seal** (37374)	14—20	1	
11444	**Push Rod Assembly** (4115-602)	14—21	1	
9028	**Circlip,** retaining Push Rod (K.19710)	14—22	1	
6445	**Rubber Boot,** over end of Master Cylinder (39994)	14—23	1	
C.26768	**CLUTCH MASTER CYLINDER (4223-079)**		1	**L.H. DRIVE CARS ONLY**
11445	**Barrel and Tank Assembly** (4221-518)		1	
11446	**Push Rod Assembly** (4115-604)		1	
	All other items are as for Clutch Master Cylinder C.26960			
C.8956	**Stud,** mounting Clutch Master Cylinder to top of Pedal Housing	14—24	2	
UFN.131/L	**Nut,** on Studs		2	
C.725	**Washer,** Shakeproof, under Nuts		2	
J.105/10S	**Clevis Pin,** connecting Clutch Master Cylinder Push Rod to Clutch Pedal	14—25	1	
L.103/7U	**Split Pin,** retaining Clevis Pin		1	
FW.105/T	**Washer,** Plain, behind Split Pin		1	
6593	**REPAIR KIT FOR SERVICING CLUTCH MASTER CYLINDER (KL.71534)**		1	
	NOTE: The Repair Kit shown above is suitable for Clutch Master Cylinder C.26960 or C.26768			
C.13070	**COVER PLATE, BLANKING REDUNDANT HOLE FOR CLUTCH MASTER CYLINDER IN PEDAL HOUSING**		1	**REQUIRED ONLY WHEN AUTOMATIC TRANSMISSION IS FITTED**
UCS.131/4R	**Screw,** Set, securing Cover Plate to Pedal Housing		2	
C.725	**Washer,** Shakeproof, on Setscrews		2	
C.27123	**PIPE ASSEMBLY, FROM CLUTCH MASTER CYLINDER TO FLEXIBLE HOSE (T.50/31B)**	14—26	1	**R.H. DRIVE CARS ONLY**
C.27124	**PIPE ASSEMBLY FROM CLUTCH MASTER CYLINDER TO FLEXIBLE HOSE (T.50/30B)**		1	**L.H. DRIVE CARS ONLY**

Part No.	Description	Plate No.	No. per Unit	Remarks
C.11603	**FLEXIBLE HOSE CONNECTING PIPES**	14—27	1	
UFN.237/L	**Nut**, securing Flexible Hose to Dash and Cylinder Head Brackets	14—28	2	
C.741	**Washer**, Shakeproof, under Nuts	14—29	2	
C.12731	**Bracket**, on rear Cylinder Head Studs, supporting Flexible Hose	14—30	1	
C.17454	**Tab Washer**, locating Hose in Bracket	14—31	1	
C.25718	**PIPE ASSEMBLY FROM FLEXIBLE HOSE TO SLAVE CYLINDER**	14—32	1	**R.H. DRIVE CARS ONLY**
C.25625	**PIPE ASSEMBLY FROM FLEXIBLE HOSE TO SLAVE CYLINDER**		1	**L.H. DRIVE CARS ONLY**
C.11674	**Clip**, securing Pipe to Clutch Housing	14—33	1	
C.24145	**SLAVE CYLINDER FOR CLUTCH OPERATION (4252-374)**	14—34	1	
C.24157	**Body only** (3232/648)	14—35	1	
10441	**Spring** (100479)	14—36	1	
6139	**Cup Filler**, at top of Spring (87575)	14—37	1	
8591	**Seal**, behind Piston (27526)	14—38	1	
8592	**Piston** (103439)	14—39	1	
8337	**Circlip**, retaining Piston in Slave Cylinder Body (K.19714)	14—40	1	
10943	**Rubber Boot**, over end of Slave Cylinder (24978)	14—41	1	
6096	**Bleed Screw**, in Slave Cylinder (28696)	14—42	1	
C.9858	**Stud**, mounting Slave Cylinder to Clutch Housing	14—43	2	
UFN.137/L	**Nut**, on Studs		2	
FG.106/X	**Washer**, Spring, under Nuts		2	
10944	**REPAIR KIT FOR SERVICING CLUTCH SLAVE CYLINDER (SSB.608)**		1	
C.25881	**OPERATING ROD, BETWEEN SLAVE CYLINDER AND CLUTCH FORK**	14—44	1	
C.24147	**ADJUSTER ASSEMBLY FOR OPERATING ROD**	14—45	1	
C.9800	**Bush**, for Adjuster		1	
UFN.231/L	**Nut**, locking Adjuster to Operating Rod	14—46	1	
C.9801	**Pivot Pin**, connecting Adjuster to Clutch Operating Fork	14—47	1	
L.103/7U	**Split Pin**, retaining Pivot Pin		1	
FW.105/T	**Washer**, Plain, behind Split Pin		1	
BO.1708/1	**Washer**, Double Coil Spring, behind Plain Washer		1	

SECTION 14

CLUTCH CONTROLS

Part No.	Description	Plate No.	No. per Unit	Remarks
C.9797	**FORK, OPERATING CLUTCH RELEASE BEARING**	14—48	1	
C.9857	**SHAFT, HOLDING OPERATING FORK IN CLUTCH HOUSING**	14—49	1	
C.8011	**Screw** (Socket Head) securing Clutch Operating Fork to Shaft	14—50	1	
UFN.125/L	**Nut**, locking Screw	14—51	1	
C.22623	**CLUTCH HOUSING (COMPLETE WITH BUSHES)**	14—52	1	
C.10025	**Bush**, for Throw-Out Shaft		2	
UFB.143/13R	**Bolt**, securing Clutch Housing to Gearbox		6	
C.587	**Plate**, locking Bolts	14—53	2	
C.5073	**Plate**, locking Bolts	14—54	1	
C.20334	**Bolt**, securing Clutch Housing to Gearbox		1	
C.20335	**Screw**, Set, securing Clutch Housing to Gearbox		1	
FW.107/T	**Washer**, Plain, on Bolt and Setscrew		2	
C.3262	**Wire**, locking Bolt and Setscrew		As req'd	
UFB.137/23R	**Bolt**, securing Clutch Housing to Cylinder Block		9	8 required at Engine No. 7F.2629 and subs.
C.726	**Washer**, Shakeproof, on Bolts		9	8 required at Engine No. 7F.2629 and subs.
C.1221/1	**Split Pin**, in Oil Drain Hole at bottom of Clutch Housing		1	
C.11910	**Cover**, over Timing Aperture at bottom of Clutch Housing	14—55	1	
BD.524/2	**Rivet**, securing Cover to Clutch Housing		1	
C.18739	**OIL SEAL, IN REAR OF CLUTCH HOUSING, FOR GEARBOX CONSTANT PINION SHAFT**	14—56	1	
C.5072	**COVER PLATE AT FRONT OF CLUTCH HOUSING**	14—57	1	
UCS.125/4R	**Screw**, Set, securing Cover Plate		4	
C.724	**Washer**, Shakeproof, on Setscrews		4	
C.4795	**SUPPORT BRACKET AT R.H. SIDE OF CLUTCH HOUSING**	14—58	1	
C.11942	**SUPPORT BRACKET AT L.H. SIDE OF CLUTCH HOUSING**	14—59	1	
UFB.131/9R	**Bolt**, securing Support Brackets to Cylinder Block		4	
UFN.131/L	**Nut**, on Bolts		4	
FG.105/X	**Washer**, Spring, under Nuts		4	
UFB.137/11R	**Bolt**, securing Support Brackets to Clutch Housing		4	
UFB.137/23R	**Bolt**, securing Support Brackets to Clutch Housing		2	
UFN.137/L	**Nut**, on Bolts		6	
C.726	**Washer**, Shakeproof, under Nuts		6	

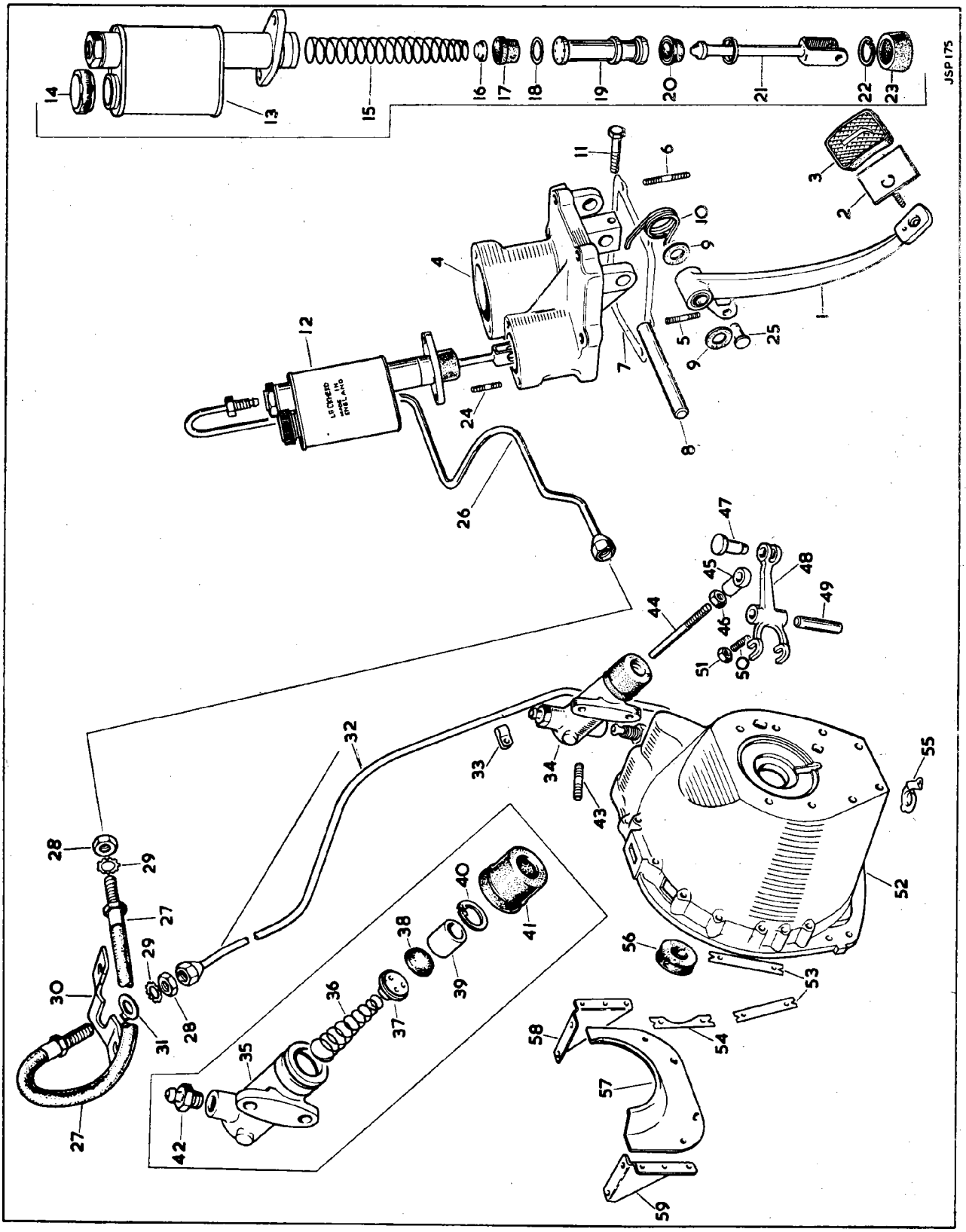

PLATE 14

GEARBOX

FOR STANDARD TRANSMISSION

Part No.	Description	Plate No.	No. per Unit	Remarks
C.20018	**GEARBOX ASSEMBLY ('JD' SERIES)**		1	**STANDARD RATIO GEARS**
C.26305	**GEARBOX ASSEMBLY ('JD' SERIES)**		1	**CLOSE RATIO GEARS. SUPPLIED TO SPECIAL ORDERS ONLY.**
C.20019	**GEARBOX CASE**	15—1	1	
C.19543	**Oil Drain Plug** (Magnetic) at bottom of Case	15—2	1	
C.799	**Oil Filler Plug,** at L.H. side of Case	15—3	1	
C.785	**Washer** (Fibre) on Plugs	15—4	2	
C.1845/1	**Ball Bearing,** for Mainshaft (MS.12¼K)	15—5	1	
C.1855	**Circlip,** around Ball Bearing	15—6	1	
C.20491	**Ball Bearing,** for Constant Pinion Shaft (MS.13¼K) (complete with Circlip C.20492)	15—7	1	
C.20492	**Circlip,** around Ball Bearing	15—8	1	
C.20494	**Collar,** between Circlip and Gearbox Case	15—9	1	
C.920	**Blanking Disc** (Fibre) in Case, at front of Countershaft	15—10	1	
C.22837	**Filter Gauze,** in rear of Gearbox Case	15—11	1	
C.20658	**Gasket,** between Gearbox and Clutch Housing	15—12	1	
C.21306	**OIL PUMP BODY AT REAR OF GEARBOX CASE**	15—13	1	
C.21308	**Inner Gear,** for Oil Pump	15—14	1	
C.21307	**Outer Gear,** for Oil Pump	15—15	1	
C.21309	**Pin,** on Mainshaft, driving Oil Pump	15—16	1	
UCS.519/5H	**Screw,** Set, securing Oil Pump Body to Rear End Cover		3	
C.22950	**REAR END COVER**	15—17	1	
C.20020	**Gasket,** between Rear End Cover and Gearbox Case	15—18	1	
UFS.131/9R	**Screw,** Set, securing Rear End Cover to Gearbox Case		7	
FG.105/X	**Washer,** Spring, on Setscrews		7	
UCS.131/3R	**Plug,** at top of Rear End Cover	15—19	1	
FW.105/E	**Washer** (Copper) on Plug	15—20	1	
C.18719	**Ball Bearing,** in Rear End Cover, supporting Mainshaft	15—21	1	
C.23392	**SPEEDOMETER DRIVEN GEAR**	15—22	1	
C.21312	**BEARING ASSEMBLY FOR SPEEDOMETER DRIVEN GEAR**	15—23	1	
C.12377/1	**Oil Seal,** in Bearing, for Speedometer Driven Gear	15—24	1	
C.9177	**'O' Ring,** around Bearing	15—25	1	
C.22999	**Screw,** locking Bearing in Rear End Cover	15—26	1	
FG.105/X	**Washer,** Spring, on locking Screw	15—27	1	
C.23394	**OIL SEAL AT END OF REAR COVER**	15—28	1	

SECTION 15

GEARBOX

FOR STANDARD TRANSMISSION

Part No.	Description	Plate No.	No. per Unit	Remarks
11122	**REMOTE CONTROL, COMPLETE (SD.1148)**	15—29	1	
	(COMPRISING TOP COVER, STRIKING RODS, CHANGE-SPEED LEVER, FORKS, SELECTOR LEVER, ETC.)			
	STRIKING GEAR			
C.24915	**Striking Rod,** 1st/2nd Gears	15—30	1	
C.24914	**Striking Rod,** 3rd/Top Gears	15—31	1	
C.21478	**Striking Rod,** Reverse Gear	15—32	1	
C.20060	**'O' Ring,** on Striking Rods	15—33	3	
C.20315	**Stop,** for 1st/2nd Striking Rod	15—34	1	
C.20316	**Stop,** for 3rd/Top Striking Rod	15—35	1	
C.21572	**Change-Speed Fork,** for 1st/2nd and 3rd/Top Gears	15—36	2	
C.21616	**Change-Speed Fork,** for Reverse Gear	15—37	1	
C.22925	**Locating Arm,** on Reverse Striking Rod	15—38	1	
C.25468	**Plunger,** in Change-Speed Fork, for Reverse Selection	15—39	1	
C.9849	**Spring,** behind Plunger	15—40	1	
C.1319	**Ball,** locking Reverse Plunger	15—41	1	
C.20065	**Spring,** loading Locking Ball	15—42	1	
UFS.131/5R	**Screw,** Set, adjusting Spring Tension	15—43	1	
UFN.231/L	**Nut,** locking Setscrew	15—44	1	
C.20314	**Dowel Screw,** securing Change-Speed Forks and Locating Arm on Striking Rods	15—45	4	
C.837	**Wire,** locking Dowel Screws		As req'd	
C.20066	**Roller,** in 1st/2nd Striking Rod, for Interlock	15—46	1	
C.922	**Ball,** between Striking Rods, for Interlock	15—47	2	
C.20056	**TOP COVER**	15—48	1	
C.1083	**Switch,** in Top Cover, operating Reversing Lamp (31542-SS.10/1)	15—49	1	**See also Electrical Equipment**
C.4531	**Gasket,** for Switch (163682)	15—50	1	
C.7379	**Plug,** in Top Cover, sealing redundant hole for Top Gear Switch	15—51	1	
C.2296/1	**Washer** (Copper) on Plug	15—52	1	
C.20057	**Gasket,** between Top Cover and Gearbox Case	15—53	1	
UFS.131/8R	**Screw,** Set, securing Top Cover to Gearbox Case		6	
UFB.131/13R	**Bolt,** securing Top Cover to Gearbox Case		4	
C.16816	**Washer,** Spring, on Setscrews and Bolts		10	
OD.105/6H	**Dowel,** locating Top Cover on Gearbox Case	15—54	2	
C.1319	**Ball,** engaging Reverse Striking Rod	15—55	1	
C.13334	**Plunger,** holding Ball	15—56	1	
C.845	**Spring,** at top of Ball	15—57	1	
C.9840	**Welch Washer,** $\frac{7}{16}$" diameter, at L.H. side of Top Cover	15—58	1	
C.26113	**Welch Washer,** $\frac{1}{4}$" diameter, at front of Top Cover (end of Striking Rods)	15—59	3	
C.841	**Breather,** in Top Cover	15—60	1	
C.930	**Washer** (Fibre) on Breather	15—61	1	
C.21104	**PIVOT JAW, HOUSING SELECTOR LEVER**	15—62	1	
C.1907	**Bush,** in Top Cover, for Pivot Jaw	15—63	1	
C.1894	**Washer** (Tufnol) at front and rear of Bush	15—64	2	
C.8737/4	**Nut,** Self-Locking, retaining Pivot Jaw to Top Cover	16—65	1	
C.1905	**Washer,** Spring (Double Coil) under Nut	15—66	1	
C.1914	**'D' Washer,** between Spring Washer and Fibre Washer	15—67	1	

Part No.	Description	Plate No.	No. per Unit	Remarks
C.20067	**SELECTOR LEVER ON END OF CHANGE-SPEED LEVER**	15—68	1	
C.1906	**Bush,** in Selector Lever	15—69	1	
C.1908	**Washer** (Tufnol) at each side of Selector Lever	15—70	2	
C.1929	**Washer,** Spring (Double Coil) between Pivot Jaw and Tufnol Washer	15—71	1	
C.21110	**Pivot Pin,** mounting Selector Lever in Pivot Jaw	15—72	1	
C.8737/4	**Nut,** Self-Locking, securing Pivot Pin	15—73	1	
C.23169	**CHANGE-SPEED LEVER**	15—74	1	
C.23007	**Knob,** on Change-Speed Lever	15—75	1	
C.23006	**Cone,** locking Knob to Lever	15—76	1	
C.22394	**UPPER BUSH, HOUSING CHANGE-SPEED LEVER IN SELECTOR LEVER**	15—77	1	
C.22395	**Washer,** Special, at top of Upper Bush	15—78	1	
C.21921	**LOWER BUSH, HOUSING CHANGE-SPEED LEVER IN SELECTOR LEVER**	15—79	1	
C.8737/2	**Nut,** Self-Locking, securing Change-Speed Lever	15—80	1	
C.26595	**Washer,** Special, under Nut	15—81	1	
C.885	**FLANGE, ON MAINSHAFT, FOR UNIVERSAL JOINT**	16—1	1	
C.840	**Nut,** Slotted, securing Flange to Mainshaft	16—2	1	
C.23168	**Washer,** Special, under Slotted Nut	16—3	1	
L.104/12U	**Split Pin,** securing Slotted Nut	16—4	1	
C.19827	**Bolt,** connecting Flange to Propeller Shaft	16—5	4	**See also Propeller Shaft**
C.22879	**MAINSHAFT**	16—6	1	
C.23337	**Speedometer Driving Gear**	16—7	1	
C.23336	**Distance Tube,** between Mainshaft Support Bearing and Distance Piece	16—8	1	
C.21301	**Distance Piece,** between Distance Tube and Mainshaft Bearing (in Case)	16—9	1	
C.21098	**Reverse Gear,** on Mainshaft	16—10	1	
C.21096	**1st Speed Gear,** on Mainshaft	16—11	1	
C.21095	**Bearing Sleeve,** for 1st Speed Gear	16—12	1	
C.23109/1	**Needle Roller,** in 1st Speed Gear (3 mm. +.0001" —.0000")	16—13	120	**USE ROLLERS OF ONE GRADE IN INDIVIDUAL GEAR ASSEMBLIES**
C.23109/2	**Needle Roller,** in 1st Speed Gear (3 mm. +.0000" —.0001"	16—13	120	
C.23109/3	**Needle Roller,** in 1st Speed Gear (3 mm.—.0001" —.0002")	16—13	120	
C.23097	**Spacer,** for Needle Rollers in 1st Speed Gear	16—14	1	
C.24638	**Synchro Hub,** for 1st/2nd Speeds	16—15	1	
C.24640	**Operating Sleeve,** for 1st/2nd Speeds	16—16	1	
C.24641	**Thrust Member,** between Sleeve and Synchro Hub	16—17	3	
C.21088	**Plunger,** under Thrust Members	16—18	3	
C.27491	**Spring,** under Plungers	16—19	3	
C.1319	**Detent Ball,** between Sleeve and Synchro Hub	16—20	3	
C.24181	**Spring,** under Balls	16—21	3	
C.22391	**Synchro Ring,** for 1st and 2nd Speeds	16—22	2	

SECTION 15

GEARBOX

FOR STANDARD TRANSMISSION

Part No.	Description	Plate No.	No. per Unit	Remarks
C.21092	**2nd Speed Gear,** on Mainshaft	16—23	1	
C.21082	**3rd Speed Gear,** on Mainshaft		1	**STANDARD RATIO GEARS**
C.20498	**3rd Speed Gear,** on Mainshaft	16—24	1	**CLOSE RATIO GEARS. SUPPLIED TO SPECIAL ORDER ONLY**
C.23109/1	**Needle Roller,** in 2nd and 3rd Speed Gears (3 mm. + .0001" —.0000")	16—25	212	**USE ROLLERS OF ONE GRADE IN INDIVIDUAL GEAR ASSEMBLIES**
C.23109/2	**Needle Roller,** in 2nd and 3rd Speed Gears (3 mm. +.0000" —.0001")	16—25	212	
C.23109/3	**Needle Roller,** in 2nd and 3rd Speed Gears (3 mm. —.0001" —.0002")	16—25	212	
C.23098	**Spacer,** for Needle Rollers in 2nd Speed Gear	16—26	1	
C.23099	**Spacer,** for Needle Rollers in 3rd Speed Gear	16—27	1	
C.24639	**Synchro Hub,** for 3rd/Top Speeds	16—28	1	
C.24640	**Operating Sleeve,** for 3rd/Top Speeds	16—29	1	
C.24641	**Thrust Member,** between Sleeve and Synchro Hub	16—30	3	
C.21088	**Plunger,** under Thrust Members	16—31	3	
C.27491	**Spring,** under Plungers	16—32	3	
C.1319	**Detent Ball,** between Sleeve and Synchro Hub	16—33	3	
C.24181	**Spring,** under Balls	16—34	3	
C.22391	**Synchro Ring,** for 3rd and Top Speeds	16—35	2	
C.21617	**Nut,** retaining 3rd Gear and 3rd/Top Synchro Hub on Mainshaft	16—36	1	
C.21618	**Tab Washer,** locking Nut	16—37	1	
C.20027	**Plug,** in end of Mainshaft	16—38	1	
C.25436	**CONSTANT PINION SHAFT**		1	**STANDARD RATIO GEARS**
C.25435	**CONSTANT PINION SHAFT**	16—39	1	**CLOSE RATIO GEARS. SUPPLIED TO SPECIAL ORDER ONLY**
C.25424	**Roller Bearing,** inside Constant Pinion Shaft	16—40	1	
C.20493	**Oil Thrower,** on Constant Pinion Shaft	16—41	1	
C.21617	**Nut,** securing Constant Pinion Shaft in Bearing	16—42	1	
C.21618	**Tab Washer,** locking Nut	16—43	1	
C.20052	**REVERSE SPINDLE**	16—44	1	
C.753	**Key,** locking Spindle in Gearbox Case	16—45	1	
C.20313	**Reverse Idler Gear,** complete with Bushes	16—46	1	
C.21198	**Lever Assembly,** operating Reverse Gear	16—47	1	
UFS.137/8R	**Screw,** Set, pivoting Lever	16—48	1	
C.930	**Washer** (Fibre) on Setscrew	16—49	1	
C.21200	**Tab Washer,** locking Setscrew	16—50	1	
C.866	**Reverse Slipper**	16—51	1	
L.103/8U	**Split Pin,** retaining Reverse Slipper to Operating Lever	16—52	1	
C.25437	**COUNTERSHAFT**	16—53	1	
C.753	**Key,** locking Countershaft in Gearbox Case	16—54	1	
C.20712	**GEAR UNIT (CLUSTER) ON COUNTERSHAFT**		1	**STANDARD RATIO GEARS**

Part No.	Description	Plate No.	No. per Unit	Remarks
C.20500	**GEAR UNIT (CLUSTER) ON COUNTERSHAFT**	16—55	1	CLOSE RATIO GEARS. SUPPLIED TO SPECIAL ORDER ONLY
C.918/1	**Needle Roller,** in Gear Unit (3 mm. +.0001″ — .0000″)	16—56	58	USE ROLLERS OF ONE GRADE IN INDIVIDUAL GEAR UNIT ASSEMBLIES
C.918/2	**Needle Roller,** in Gear Unit (3 mm. +.0000″ — .0001″)	16—56	58	
C.918/3	**Needle Roller,** in Gear Unit (3 mm. —.0001″ — .0002″)	16—56	58	
C.21099	**Retaining Ring,** at rear of Front Needle Rollers and at each end of Rear Needle Rollers	16—57	3	
C.21100	**Thrust Washer Assembly,** at rear of Gear Unit	16—58	1	
C.1861	**Thrust Washer Assembly,** Inner, at front of Gear Unit	16—59	1	
C.1862	**Thrust Washer,** Outer, at front of Gear Unit (.156″ thick)	16—60	1	SELECTIVE SIZES. USE AS NECESSARY TO OBTAIN .004″/.006″ END FLOAT
C.1862/1	**Thrust Washer,** Outer, at front of Gear Unit (.159″ thick)	16—60	1	
C.1862/2	**Thrust Washer,** Outer, at front of Gear Unit (.162″ thick)	16—60	1	
C.1862/3	**Thrust Washer,** Outer, at front of Gear Unit (.152″ thick)	16—60	1	
C.1862/4	**Thrust Washer,** Outer, at front of Gear Unit (.164″ thick)	16—60	1	

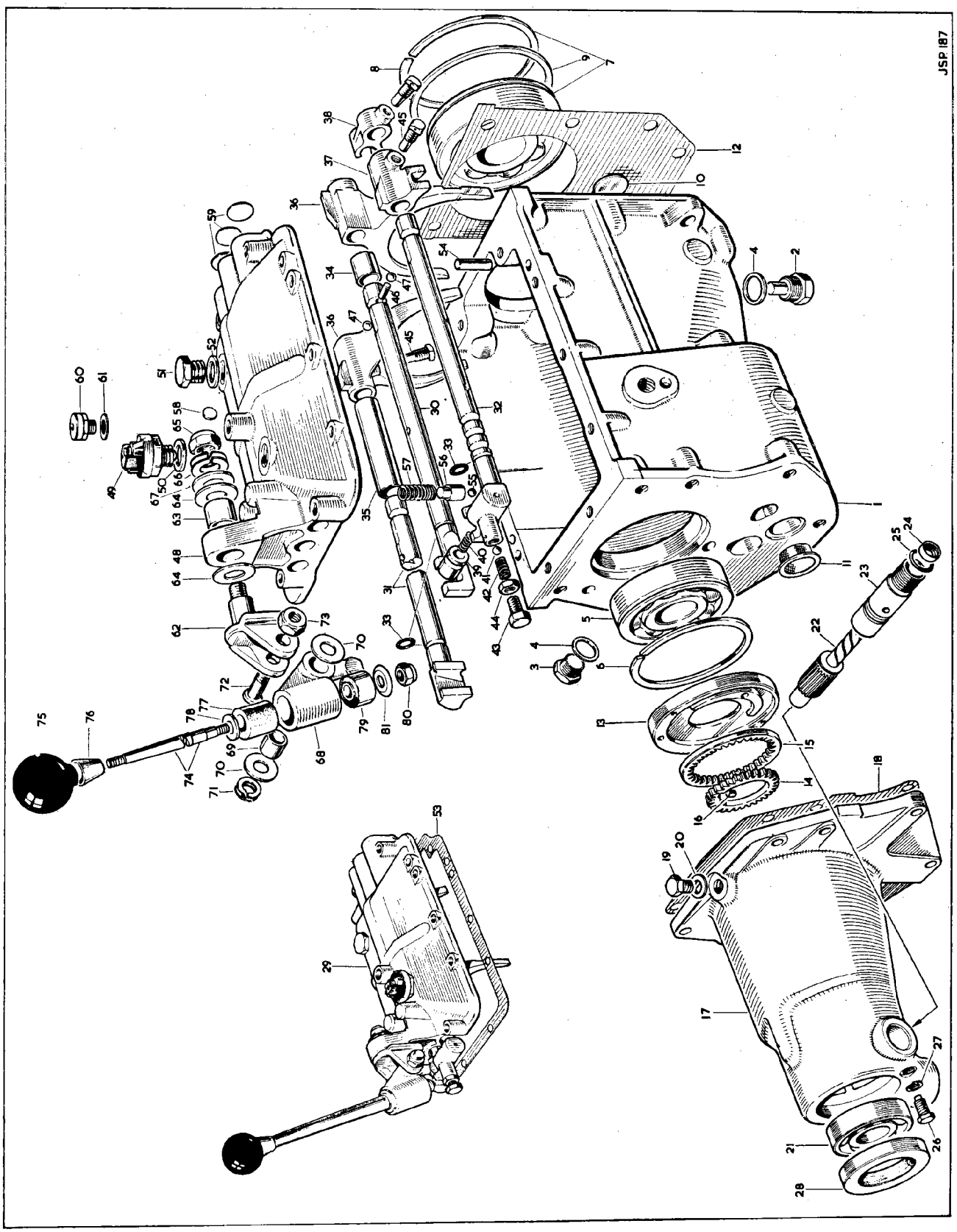

PLATE 15

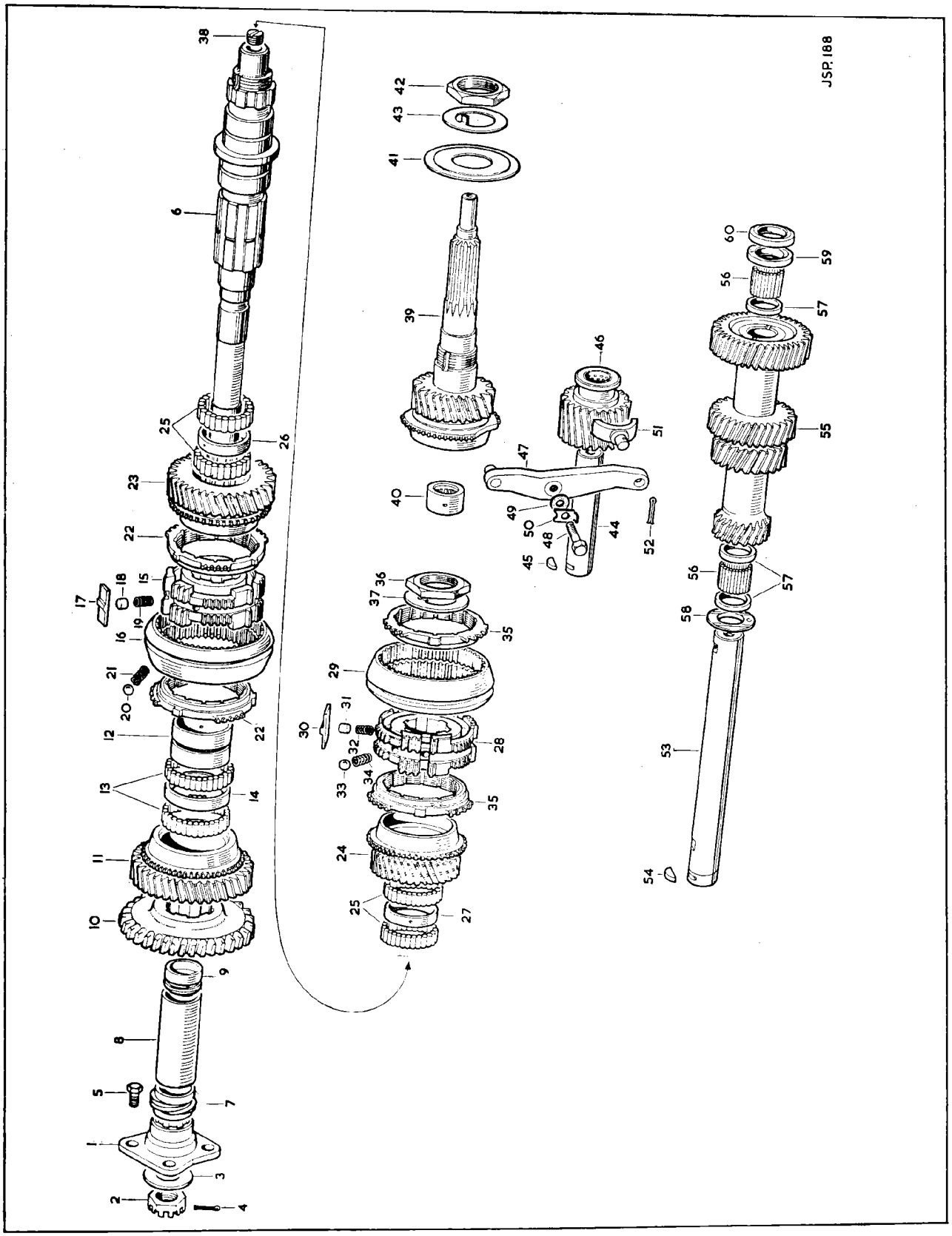

PLATE 16

SECTION 16

GEARBOX

FOR OVERDRIVE TRANSMISSION

Part No.	Description	Plate No.	No. per Unit	Remarks
C.24883	**GEARBOX ASSEMBLY ('JDN' SERIES)**		1	**STANDARD RATIO GEARS**
C.26308	**GEARBOX ASSEMBLY ('JDN' SERIES)**		1	**CLOSE RATIO GEARS. SUPPLIED TO SPECIAL ORDER ONLY**
C.20019	**GEARBOX CASE**	17—1	1	
C.19543	**Oil Drain Plug** (Magnetic) at bottom of Case	17—2	1	
C.799	**Oil Filler Plug**, at L.H. side of Case	17—3	1	
C.785	**Washer** (Fibre) on Plugs	17—4	2	
C.1845/1	**Ball Bearing**, for Mainshaft (MS.12½K)	17—5	1	
C.1855	**Circlip**, around Ball Bearing	17—6	1	
C.20491	**Ball Bearing**, for Constant Pinion Shaft (MS.13½K) (Complete with Circlip C.20492)	17—7	1	
C.20492	**Circlip**, around Ball Bearing	17—8	1	
C.20494	**Collar**, between Circlip and Gearbox Case	17—9	1	
C.920	**Blanking Disc** (Fibre) in Gearbox Case, at front of Countershaft	17—10	1	
C.20658	**Gasket**, between Gearbox Case and Clutch Housing	17—11	1	
C.22605	**Gasket**, between Gearbox Case and Overdrive Unit	17—12	1	
UFS.131/7R	**Screw**, Set, securing Overdrive Unit to Gearbox		7	
FG.105/X	**Washer**, Spring, on Setscrews		7	
10755	**REMOTE CONTROL COMPLETE (S.D.1146)** **(COMPRISING TOP COVER, STRIKING RODS, CHANGE-SPEED LEVER, FORKS, SELECTOR LEVER, ETC.)**	17—13	1	
	STRIKING GEAR			
C.24915	**Striking Rod**, 1st/2nd Gears	17—14	1	
C.24914	**Striking Rod**, 3rd/Top Gears	17—15	1	
C.21478	**Striking Rod**, Reverse Gear	17—16	1	
C.20060	**'O' Ring**, on Striking Rods	17—17	3	
C.20315	**Stop**, for 1st/2nd Striking Rod	17—18	1	
C.20316	**Stop**, for 3rd/Top Striking Rod	17—19	1	
C.21572	**Change-Speed Fork**, for 1st/2nd and 3rd/Top Gears	17—20	2	
C.21616	**Change-Speed Fork**, for Reverse Gear	17—21	1	
C.22925	**Locating Arm**, on Reverse Striking Rod	17—22	1	
C.25468	**Plunger**, in Change-Speed Fork, for Reverse Selection	17—23	1	
C.9849	**Spring**, behind Plunger	17—24	1	
C.1319	**Ball**, locking Reverse Plunger	17—25	1	
C.20065	**Spring**, loading Locking Ball	17—26	1	
UFS.131/5R	**Screw**, Set, adjusting Spring Tension	17—27	1	
UFN.231/L	**Nut**, locking Setscrew	17—28	1	
C.20314	**Dowel Screw**, securing Change-Speed Forks and Locating Arm on Striking Rods	17—29	4	
C.837	**Wire**, locking Dowel Screws		As req'd	
C.20066	**Roller**, in 1st/2nd Striking Rod, for Interlock	17—30	1	
C.922	**Ball**, between Striking Rods, for Interlock	17—31	2	
C.20056	**TOP COVER**	17—32	1	
C.1083	**Switch**, in Top Cover, operating Reversing Lamp and Top Gear Circuit (31542-SS.10/1)	17—33	2	**See also Electrical Equipment**
C.4531	**Gasket**, for Reversing Lamp Switch (163682)	17—34	1	
C.4531	**Gasket**, for adjustment of Top Gear Switch (163682)		As req'd	
C.26377	**Gasket**, for adjustment of Top Gear Switch (.020" thick)		As req'd	

Part No.	Description	Plate No.	No. per Unit	Remarks
C.20057	**Gasket**, between Top Cover and Gearbox Case	17—35	1	
UFS.131/8R	**Screw**, Set, securing Top Cover to Gearbox Case		6	
UFB.131/13R	**Bolt**, securing Top Cover to Gearbox Case		4	
C.16816	**Washer**, Spring, on Setscrews and Bolts		10	
OD.105/6H	**Dowel**, locating Top Cover on Gearbox Case	17—36	2	
C.1319	**Ball**, engaging Reverse Striking Rod	17—37	1	
C.13334	**Plunger**, holding Ball	17—38	1	
C.845	**Spring**, at top of Plunger	17—39	1	
C.9840	**Welch Washer**, $\frac{7}{16}$" diameter, at L.H. side of Top Cover	17—40	1	
C.26113	**Welch Washer**, $\frac{3}{8}$" diameter, at front of Top Cover (end of Striking Rods)	17—41	3	
C.841	**Breather**, in Top Cover	17—42	1	
C.930	**Washer** (Fibre) on Breather	17—43	1	
C.21104	**PIVOT JAW, HOUSING SELECTOR LEVER**	17—44	1	
C.1907	**Bush** (Tufnol) in Top Cover, for Pivot Jaw	17—45	1	
C.1894	**Washer** (Tufnol) at front and rear of Bush	17—46	2	
C.8737/4	**Nut**, Self-Locking, retaining Pivot Jaw to Top Cover	17—47	1	
C.1905	**Washer**, Double Coil Spring, under Nut	17—48	1	
C.1914	**'D' Washer**, between Spring Washer and Tufnol Washer	17—49	1	
C.20067	**SELECTOR LEVER, ON END OF CHANGE-SPEED LEVER**	17—50	1	
C.1906	**Bush** (Tufnol) in Selector Lever	17—51	1	
C.1908	**Washer** (Tufnol) at each side of Selector Lever	17—52	2	
C.1929	**Washer**, Double Coil Spring, between Pivot Jaw and Tufnol Washer	17—53	1	
C.21110	**Pivot Pin**, mounting Selector Lever in Pivot Jaw	17—54	1	
C.8737/4	**Nut**, Self-Locking, securing Pivot Pin	17—55	1	
C.23169	**CHANGE-SPEED LEVER**	17—56	1	
C.23007	**Knob**, on Change-Speed Lever	17—57	1	
C.23006	**Cone**, locking Knob to Lever	17—58	1	
C.22394	**UPPER BUSH, HOUSING CHANGE-SPEED LEVER IN SELECTOR LEVER**	17—59	1	
C.22395	**Washer**, at top of Upper Bush	17—60	1	
C.21921	**LOWER BUSH, HOUSING CHANGE-SPEED LEVER IN SELECTOR LEVER**	17—61	1	
C.8737/2	**Nut**, Self-Locking, securing Change Speed Lever in Selector Lever	17—62	1	
C.26595	**Washer**, Special, under Nut	17—63	1	

SECTION 16

GEARBOX

FOR OVERDRIVE TRANSMISSION

Part No.	Description	Plate No.	No. per Unit	Remarks
C.21939	**MAINSHAFT**	18—1	1	
C.20036	**Nut,** securing Mainshaft in Bearing	18—2	1	
C.20037	**Tab Washer,** locking Nut	18—3	1	
C.21098	**Reverse Gear,** on Mainshaft	18—4	1	
C.21096	**1st Speed Gear,** on Mainshaft	18—5	1	
C.21095	**Bearing Sleeve,** for 1st Speed Gear	18—6	1	
C.23109/1	**Needle Roller,** in 1st Speed Gear (3 mm. + .0001" — .0000")	18—7	120	
C.23109/2	**Needle Roller,** in 1st Speed Gear (3 mm. + .0000" — .0001")	18—7	120	**USE ROLLERS OF ONE GRADE IN INDIVIDUAL GEAR ASSEMBLIES**
C.23109/3	**Needle Roller,** in 1st Speed Gear (3 mm. — .0001" — .0002")	18—7	120	
C.23097	**Spacer,** for Needle Rollers in 1st Speed Gear	18—8	1	
C.24638	**Synchro Hub,** for 1st/2nd Speeds	18—9	1	
C.24640	**Operating Sleeve,** for 1st/2nd Speeds	18—10	1	
C.24641	**Thrust Member,** between Sleeve and Synchro Hub	18—11	3	
C.21088	**Plunger,** under Thrust Members	18—12	3	
C.27491	**Spring,** under Plungers	18—13	3	
C.1319	**Detent Ball,** between Sleeve and Synchro Hub	18—14	3	
C.24181	**Spring,** under Detent Balls	18—15	3	
C.22391	**Synchro Ring,** for 1st and 2nd Speeds	18—16	2	
C.21092	**2nd Speed Gear,** on Mainshaft	18—17	1	
C.21082	**3rd Speed Gear,** on Mainshaft	18—18	1	**STANDARD RATIO GEARS**
C.20498	**3rd Speed Gear,** on Mainshaft		1	**CLOSE RATIO GEARS. SUPPLIED TO SPECIAL ORDERS ONLY**
C.23109/1	**Needle Roller,** in 2nd and 3rd Speed Gears (3 mm. — .0001" — .0000")	18—19	212	
C.23109/2	**Needle Roller,** in 2nd and 3rd Speed Gears (3 mm. — .0000" — .0001")	18—19	212	**USE ROLLERS OF ONE GRADE IN INDIVIDUAL GEAR ASSEMBLIES**
C.23109/3	**Needle Roller,** in 2nd and 3rd Speed Gears (3 mm. — .0001" — .0002")	18—19	212	
C.23098	**Spacer,** for Needle Rollers in 2nd Speed Gear	18—20	1	
C.23099	**Spacer,** for Needle Rollers in 3rd Speed Gear	18—21	1	
C.24639	**Synchro Hub,** for 3rd/Top Speeds	18—22	1	
C.24640	**Operating Sleeve,** for 3rd/Top Speeds	18—23	1	
C.24641	**Thrust Member,** between Sleeve and Synchro Hub	18—24	3	
C.21088	**Plunger,** under Thrust Members	18—25	3	
C.27491	**Spring,** under Plungers	18—26	3	
C.1319	**Detent Ball,** between Sleeve and Synchro Hub	18—27	3	
C.24181	**Spring,** under Balls	18—28	3	
C.22391	**Synchro Ring,** for 3rd and Top Speeds	18—29	2	
C.21617	**Nut,** retaining 3rd Gear and 3rd/Top Synchro Hub on Mainshaft	18—30	1	
C.21618	**Tab Washer,** locking Nut	18—31	1	
C.20027	**Plug,** in end of Mainshaft	18—32	1	
C.25436	**CONSTANT PINION SHAFT**	18—33	1	**STANDARD RATIO GEARS**
C.25435	**CONSTANT PINION SHAFT**		1	**CLOSE RATIO GEARS SUPPLIED TO SPECIAL ORDER ONLY**
C.25424	**Roller Bearing,** inside Constant Pinion Shaft	18—34	1	
C.20493	**Oil Thrower,** on Constant Pinion Shaft	18—35	1	
C.21617	**Nut,** securing Constant Pinion Shaft in Bearing	18—36	1	
C.21618	**Tab Washer,** locking Nut	18—37	1	
C.20052	**REVERSE SPINDLE**	18—38	1	
C.753	**Key,** locking Spindle in Gearbox Case	18—39	1	
C.20313	**Reverse Idler Gear,** complete with Bushes	18—40	1	
C.21198	**Lever Assembly,** operating Reverse Gear	18—41	1	
UFS.137/8R	**Screw,** Set, pivoting Lever	18—42	1	
C.930	**Washer** (Fibre) on Setscrew	18—43	1	
C.21200	**Tab Washer,** locking Setscrew	18—44	1	
C.866	**Reverse Slipper**	18—45	1	
L.103/8U	**Split Pin,** retaining Reverse Slipper to Operating Lever	18—46	1	

Part No.	Description	Plate No.	No. per Unit	Remarks
C.25437	**COUNTERSHAFT**	18—47	1	
C.753	**Key,** locking Countershaft in Gearbox Case	18—48	1	
C.20712	**GEAR UNIT (CLUSTER) ON COUNTERSHAFT**	18—49	1	**STANDARD RATIO GEARS**
C.20500	**GEAR UNIT (CLUSTER) ON COUNTERSHAFT**		1	**CLOSE RATIO GEARS. SUPPLIED TO SPECIAL ORDER ONLY**
C.918/1	**Needle Roller,** in Gear Unit (3 mm. +.0001"—.0000")	18—50	58	**USE ROLLERS OF ONE GRADE IN INDIVIDUAL GEAR UNIT ASSEMBLIES**
C.918/2	**Needle Roller,** in Gear Unit (3 mm.+.0000"—.0001")	18—50	58	
C.918/3	**Needle Roller,** in Gear Unit (3 mm.—.0001"—.0002")	18—50	58	
C.21099	**Retaining Ring,** at rear of Front Needle Rollers and at each end of Rear Needle Rollers	18—51	3	
C.21100	**Thrust Washer Assembly,** at rear of Gear Unit	18—52	1	
C.1861	**Thrust Washer Assembly,** Inner, at Front of Gear Unit	18—53	1	
C.1862	**Thrust Washer,** Outer, at front of Gear Unit (.156" thick)	18—54	1	**SELECTIVE SIZES. USE AS NECESSARY TO OBTAIN .004"/.006" END FLOAT**
C.1862/1	**Thrust Washer,** Outer, at front of Gear Unit (.159" thick)	18—54	1	
C.1862/2	**Thrust Washer,** Outer, at front of Gear Unit (.162" thick)	18—54	1	
C.1862/3	**Thrust Washer,** Outer, at front of Gear Unit (.152" thick)	18—54	1	
C.1862/4	**Thrust Washer,** Outer, at front of Gear Unit (.164" thick)	18—54	1	

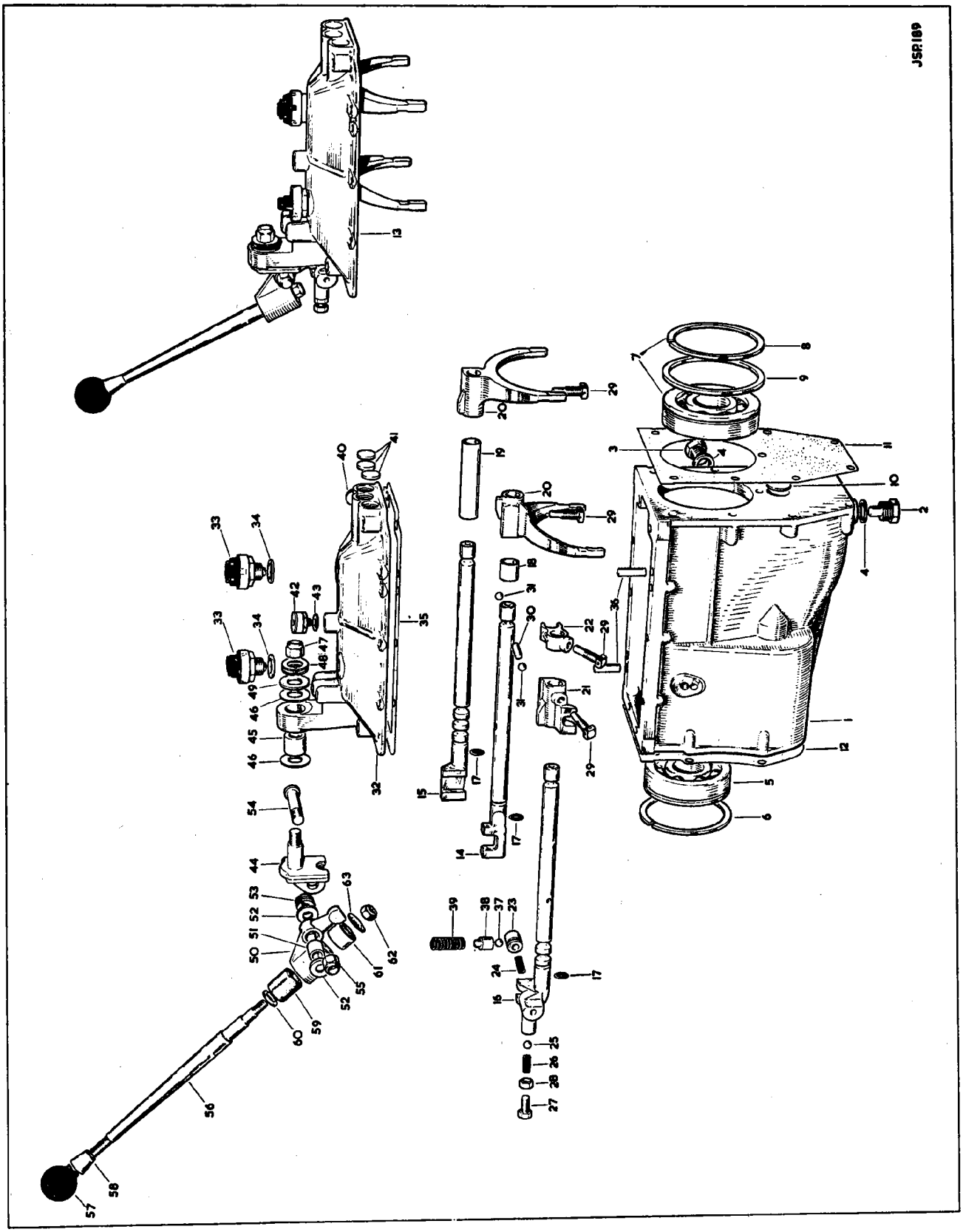

PLATE 17

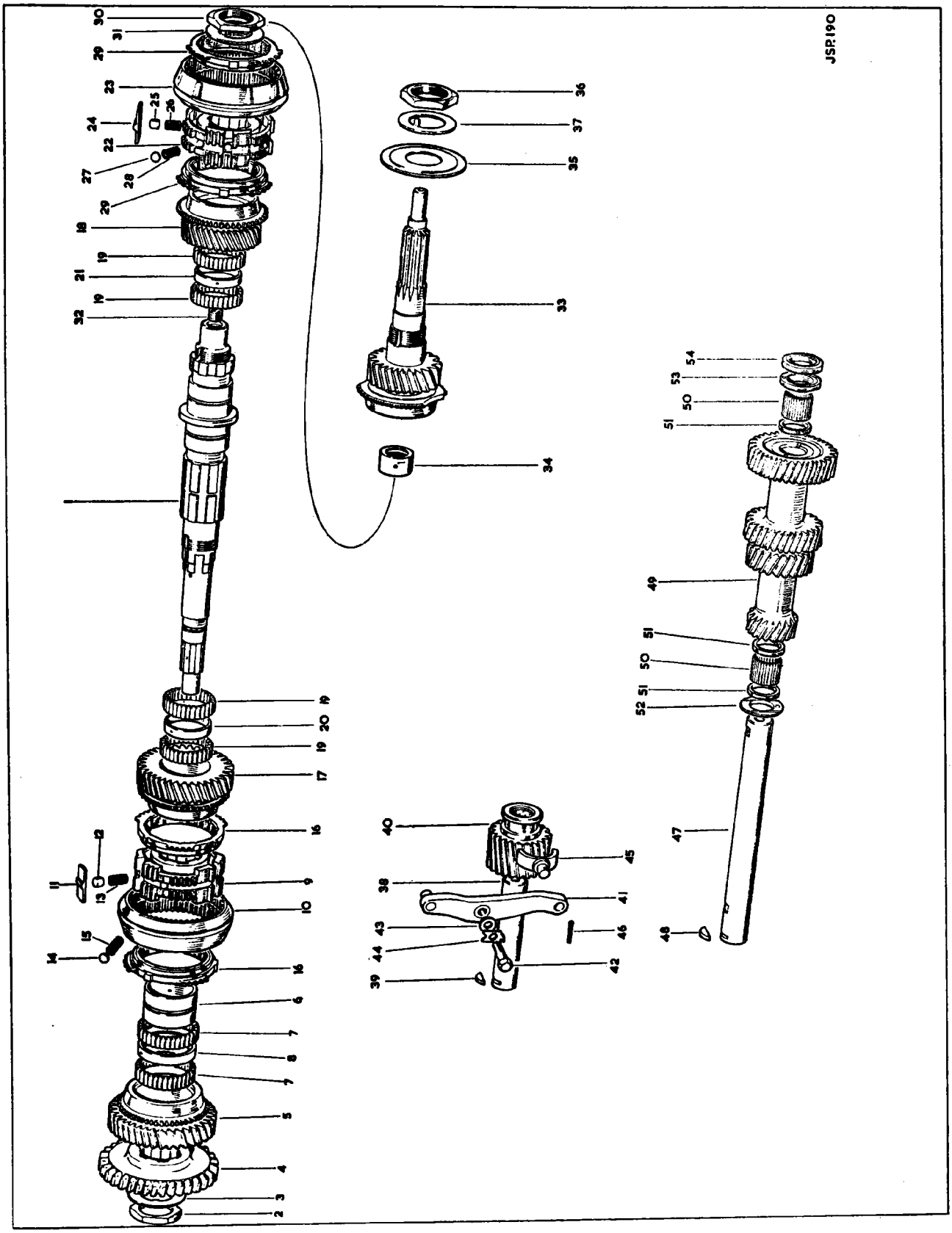

PLATE 18

OVERDRIVE UNIT

Part No.	Description	Plate No.	No. per Unit	Remarks
C.22409	**OVERDRIVE UNIT, COMPLETE (28/60552)**		1	
10811	**ADAPTOR PLATE FOR ATTACHMENT OF OVERDRIVE UNIT TO GEARBOX (60439)**	19—1	1	
10812	**Gasket,** between Adaptor Plate and Front Casing (60456)	19—2	1	
10813	**Stud,** fixing Adaptor Plate to Front Casing (63603/2)	19—3	4	
10814	**Stud,** fixing Adaptor Plate to Rear Casing (60395)	19—4	2	
UFN.131/L	**Nut,** on Studs (127/2/A)		6	
FG.105/X	**Washer,** Spring, under Nuts (1402)		6	
10815	**FRONT CASING ASSEMBLY (65904)**	19—5	1	
10816	**Shaft,** for Main Operating Valve (60388)	19—6	1	
10817	**Cam,** on Shaft (60595)	19—7	1	
10818	**Lever,** on Shaft (60387)	19—8	1	
10819	**Roll Pin,** securing Cam and Lever to Shaft (138/39)	19—9	2	
C.10378	**'O' Ring,** on Shaft, between Lever and Casing (64486)	19—10	1	
10820	**Welch Washer,** sealing aperture in front face of Casing (144/9)	19—11	1	
C.5675	**Stop** (Rubber) for Solenoid (64283)	19—12	1	
C.5671	**Breather,** at top of Casing (64370)	19—13	1	
10822	**Stud,** fixing Front Casing to Rear Casing (60393)	19—14	2	
UFN.131/L	**Nut,** on Studs of Front Casing (127/2/A)		2	
FG.105/X	**Washer,** Spring, under Nuts (1402)		2	
10968	**MAIN OPERATING VALVE (60686)**	19—15	1	
C.5922	**Ball,** $\frac{1}{16}$" diameter, at bottom of Valve (9809)	19—16	1	
C.5919	**Plunger,** below Ball (60036)	19—17	1	
7972	**Spring,** under Plunger (60440)	19—18	1	
10824	**Plug,** retaining Valve Parts (60385)	19—19	1	
C.5903	**Washer** (Copper) on Plug (60024)	19—20	1	
10825	**OIL PUMP PLUNGER ASSEMBLY IN FRONT CASING (65906)**	19—21	1	
10826	**Body,** for Oil Pump (60450)	19—22	1	
C.5938	**Spring,** tensioning Oil Pump Plunger (60536)	19—23	1	
10827	**Screw,** retaining Oil Pump Body in Front Casing (60399)	19—24	1	
10828	**Washer** (Fibre) on Screw (1678)	19—25	1	
10829	**'O' Ring,** around Oil Pump Body (131/3)	19—26	1	
10830	**NON-RETURN VALVE KIT (65851)**		1	
	Comprising:-			
11090	**Body,** for Non Return Valve (64548)	19—27	1	
C.9818	**Ball,** $\frac{1}{32}$" diameter, for Non-Return Valve (9811)	19—28	1	
10831	**Spring,** for Non-Return Valve (60334)	19—29	1	
11089	**Support Rod,** for Spring (6662)	19—30	1	
10832	**Plug,** retaining Valve Parts (60452)	19—31	1	
10833	**Washer** (Copper) on Plug (60453)	19—32	1	

SECTION 17

OVERDRIVE UNIT

Part No.	Description	Plate No.	No. per Unit	Remarks
10834	**OIL FILTER, IN FRONT CASING (60525)**	19—33	1	
10835	**MAGNETIC RING, AT EACH END OF FILTER (65902) (SET OF FOUR RINGS)**	19—34	1 set	
10836	**PLUG, RETAINING FILTER (60524)**	19—35	1	
10837	**Washer**, on Plug (60531)	19—36	1	
C.23406	**CAM, OPERATING OIL PUMP (60447)**	19—37	1	
10838	**OPERATING PISTON ASSEMBLY, IN FRONT CASING (65905)**	19—38	2	
7949	**'O' Ring**, on Operating Pistons (61647)	19—39	2	
10839	**Bridge Piece**, retaining Operating Pistons (60357)	19—40	2	
UFN.125/L	**Nut**, securing Bridge Pieces (65285)	19—41	4	
C.5965	**Tab Washer**, locking Nuts (65300)	19—42	4	
10840	**ACCUMULATOR PISTON ASSEMBLY, COMPLETE WITH RINGS (65896)**	19—43	1	
C.5677	**Ring**, on Piston (60814)	19—44	2	
10969	**SPRING,FOR ACCUMULATOR PISTON (60792)**	19—45	1	
10841	**Support Rod**, inside Accumulator Spring (60582)	19—46	1	
11334	**Packing Washer** (.128" thick) at bottom of Accumilator Spring (64648/1)	19—47	As req'd	SELECTIVE SIZES
11335	**Packing Washer** (.056" thick) at bottom of Accumulator Spring (64648/2)	19—47	As req'd	SELECTIVE SIZES
11336	**Packing Washer** (.020" thick) at bottom of Accumulator Spring (64648/3)	19—47	As req'd	SELECTIVE SIZES
11337	**Packing Washer** (.104" thick) at bottom of Accumulator Spring (64648/4)	19—47	As req'd	SELECTIVE SIZES
11338	**Packing Washer** (.160" thick) at bottom of Accumulator Spring (64648/5)	19—47	As req'd	SELECTIVE SIZES
11339	**Packing Washer** (.048" thick) at bottom of Accumulator Spring (64648/6)	19—47	As req'd	SELECTIVE SIZES
10842	**Plug**, retaining Acculmuator Spring (61345)	19—48	1	
11128	**Washer**, on Plug (61347)	19—49		
10002	**SOLENOID (76522/F-11S) (65210)**	19—50	1	
9240	**Gasket**, between Solenoid and Front Casing (60121)	19—51	1	
UFS.119/4R	**Screw**, Set, securing Solenoid to Front Casing		2	
AG.102/X	**Washer**, Spring, on Setscrews		2	
C.8737/1	**Nut**, for Solenoid Plunger Adjustment (5721)	19—52	1	
10844	**Gasket**, under Solenoid Inspection Cover (Name Plate) (60397)	19—53	1	
UFS.119/4R	**Screw**, Set, securing Inspection Cover to Front Casing		4	
C.723/A	**Washer**, Shakeproof, on Setscrews		4	

Part No.	Description	Plate No.	No. per Unit	Remarks
10845	**THRUST RING ASSEMBLY FOR CLUTCH (65899)**	19—54	1	
10846	**Plate**, retaining Thrust Ring to Bearing on Sliding Member (60372)	19—55	1	
11303	**SPRING, ON PINS OF THRUST RING (65966) (SUPPLIED ONLY IN SETS OF SIX SPRINGS)**	19—56	1 set	
10848	**SLIDING MEMBER ASSEMBLY, FOR CLUTCH (65920)**	19—57	1	
C.5968	**Ball Bearing**, on Sliding Member (65024)	19—58	1	
C.5977	**Circlip** (1⅞" External) securing Ball Bearing (9003)	19—59	1	
9152	**Corrugated Washer**, on Sun Wheel, forward of Sliding Member (63616)	19—60	1	
10849	**Snap Ring**, retaining Sliding Member to Sun Wheel (60375)	19—61	1	
10850	**BRAKE RING (60438)**	19—62	1	
10851	**SUN WHEEL ASSEMBLY (65900)**	19—63	1	
10852	**PLANETARY CARRIER ASSEMBLY (65901)**	19—64	3	
10853	**Shaft**, for Planetary Bearings (60380)		3	
10854	**Mills Pin**, securing Shafts (6380)		3	
10855	**Bearing** (Torrington) inside Planetary Gears (62555)		6	
11125	**Spacing Collar**, between Bearings (63743)		3	
7979	**Thrust Washer**, behind Planetary Gears (65336)		3	
10856	**ANNULUS ASSEMBLY (65897)**	19—65	1	
10857	**Oil Thrower**, in Annulus (63714)	19—66	1	
9117	**Spring Ring**, securing Oil Thrower (61619)	19—67	1	
C.18957	**Spring Clip**, preventing forward movement of Annulus and Planetary Carrier	19—68	1	
10858	**BALL BEARING, ON SHAFT, ADJACENT TO ANNULUS (45×85×11 mm.) (186/53)**	19—69	1	
10859	**Circlip**, retaining Ball Bearing in Rear Casing (9142)	19—70	1	
9178	**BALL BEARING, AT REAR END OF ANNULUS SHAFT (40×80×11 mm.) (186/60)**	19—71	1	

SECTION 17

OVERDRIVE UNIT

Part No.	Description	Plate No.	No. per Unit	Remarks
C.5956	**CAGE FOR UNI-DIRECTIONAL CLUTCH (64011)**	19—72	1	
C.5967	**Roller**, for Cage (12 rollers per set) (65534)	19—73	1 set	
9116	**Spring**, for Cage (60676)	19—74	1	
C.5957	**INNER MEMBER FOR UNI-DIRECTIONAL CLUTCH (FREE WHEEL) (64010)**	19—75	1	
C.5942	**Thrust Washer**, behind Inner Member (60634)	19—76	1	
10860	**REAR CASING ASSEMBLY (65907)**	19—77	1	
10861	**Stud**, fixing Rear Casing to Front Casing (60489)	19—78	2	
10862	**Thrust Button**, for Speedometer Driven Gear (64698)	19—79	1	
UFN.131/L	**Nut**, on Studs of Rear Casing (127/2/A)		2	
FG.105/X	**Washer**, Spring, under Nuts (1402)		2	
10863	**OIL SEAL AT END OF REAR CASING (9231)**	19—80	1	
10864	**SPEEDOMETER DRIVING GEAR (60491)**	19—81	1	
10865	**SPEEDOMETER DRIVEN GEAR (60490)**	19—82	1	
10866	**BEARING ASSEMBLY FOR SPEEDOMETER DRIVEN GEAR (65606)**	19—83	1	
C.11211	**'O' Ring**, around Bearing (64564)	19—84	1	
C.5680	**Screw**, retaining Bearing in Rear Casing (61082)	19—85	1	
7978	**Washer** (Copper) on Screw (64941)	19—86	1	
10867	**FLANGE, CONNECTING OVERDRIVE UNIT TO PROPELLER SHAFT (60376)**	19—87	1	
C.19827	**Bolt**, in Flange, for connection of Propeller Shaft	19—88	4	
9121	**Nut**, Slotted, securing Flange to Annulus Shaft (63575)	19—89	1	
9122	**Washer**, under Slotted Nut (63576)	19—90	1	
L.104/12U	**Split Pin**, locking Slotted Nut (6022)	19—91	1	

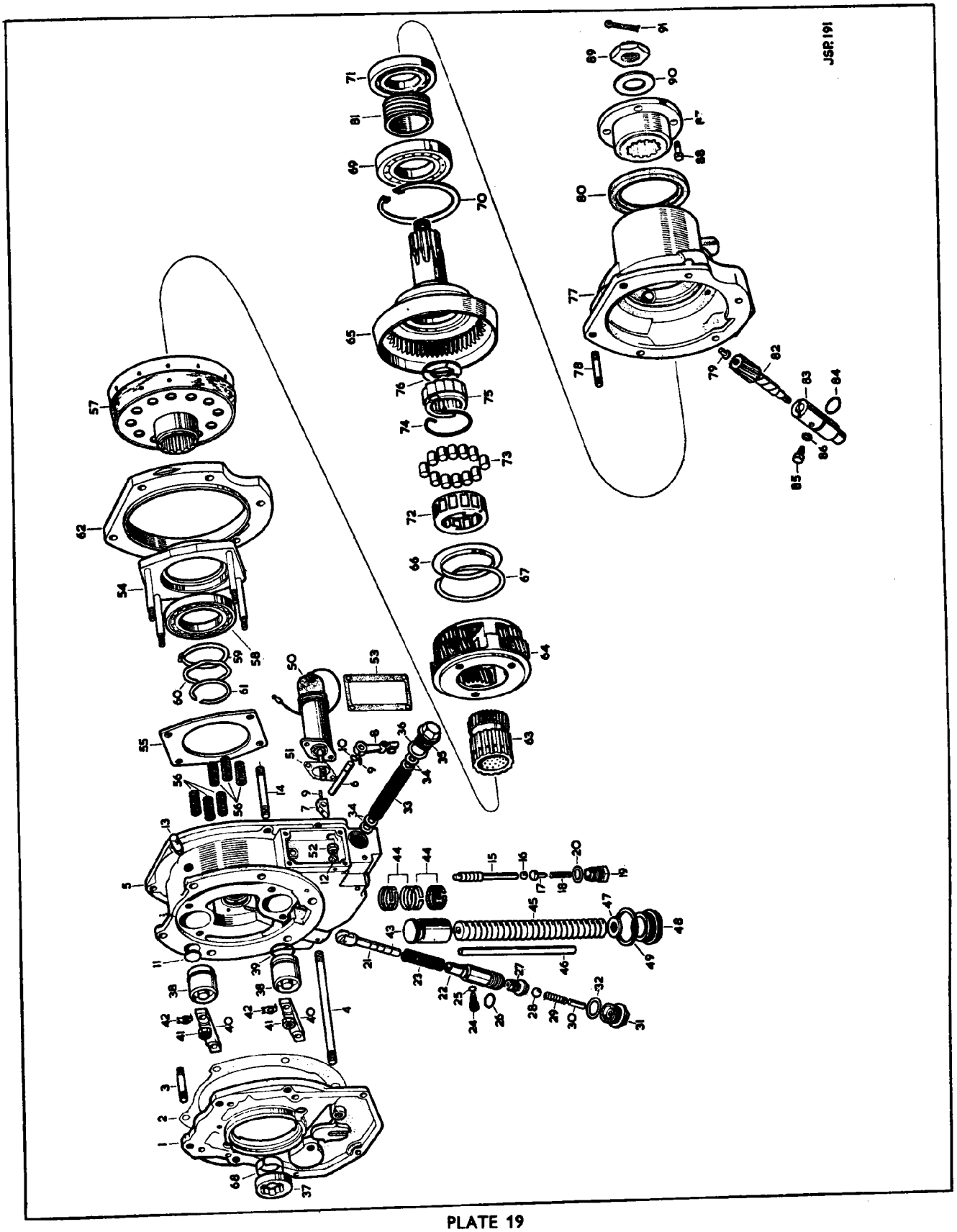

PLATE 19

SECTION 18

AUTOMATIC TRANSMISSION UNIT

Part No.	Description	Plate No.	No. per Unit	Remarks
C.26900	**AUTOMATIC TRANSMISSION ASSEMBLY (MODEL 8) (AS4-8G) LESS CONVERTER**		1	
C.22781	**CONVERTER ASSEMBLY (8EG-1A.368)**	20—1	1	
10563	**TRANSMISSION CASE ASSEMBLY (8G-2A1)**	20—2	1	
10564	**Plug,** sealing holes in Transmission Case Flange (3-111)	20—3	2	
10565	**Dowel,** for Front Servo (3-279)	20—4	1	
10566	**Plug,** for Pressure Test (X1516H)	20—5	1	
10567	**Oil Seal,** for Manual Control Shaft (3-107A)	20—6	1	
10568	**Screw,** for Rear Servo Adjustment (4626E)	20—7	1	
10569	**Nut,** locking Screw (4775F)	20—8	1	
C.23415	**Union,** for Oil Outlet Pipe (116341)	20—9	1	
C.23414	**Union,** for Oil Return Pipe (137422)	20—10	1	
10570	**Breather Assembly,** on Transmission Case (4740A)	20—11	1	
C.25691	**Manual Control Shaft Assembly,** in Transmission Case (8K-76)	20—12	1	
C.25817	**Selector Lever,** on Manual Control Shaft	20—12A	1	
C.8737/3	**Nut,** Self-Locking, securing Selector Lever		1	
C.25917	**Spacer,** under Self-Locking Nut		1	
10571	**Lever Assembly,** on Shaft, for Manual Valve Detent (8H-A78)	20—13	1	
10572	**Locknut,** retaining Lever to Shaft (4775A)		1	
9874	**Ball,** $\frac{3}{8}$", positioning Detent Lever (453593)	20—14	1	
10573	**Spring,** tensioning Ball (8H-83)	20—15	1	
10574	**Link,** connecting Detent Lever to Torsion Lever (3-266)	20—16	1	
9875	**Clip,** retaining Link (4857A)	20—17	2	
9876	**Torsion Lever,** for Parking Brake Linkage (3-261)	20—18	1	
9877	**Spring,** providing tension between Torsion Lever and Forked Lever (3-264A)	20—19	1	
9878	**Forked Lever,** engaging Ball Pin in Toggle Lever (3-A262)	20—20	1	
9879	**Clip,** retaining Torsion Lever, Forked Lever, and Spring (4743A)	20—21	1	
9890	**Washer,** Plain, under Clip (3-321)	20—22	1	
9880	**Toggle Lever,** for Parking Brake Pawl (3-272)	20—23	1	
10575	**Toggle Pin** (shouldered) pivoting Toggle Lever (3-276)	20—24	1	
10576	**Plug,** retaining Toggle Pin (4572J)	20—25	1	
10577	**Ball Pin,** securing Link to Toggle Lever (8-274)	20—26	1	
10578	**Spring,** on Ball Pin, tensioning Parking Brake Pawl (8-271)	20—27	1	
9888	**Link,** connecting Toggle Lever to Parking Brake Pawl (3-273)	20—28	1	
10579	**Pawl,** for Parking Brake (3-268)	20—29	1	
10580	**Pivot Pin,** for Parking Brake Pawl (3-269)	20—30	1	
9889	**Pin,** securing Pawl to Link (3-275)	20—31	1	
10581	**EXTENSION CASE ASSEMBLY (8G-A107)**	20—32	1	
10582	**Cover Plate,** sealing Governor Inspection Aperture (3-74A)	20—33	1	
10583	**Gasket,** under Cover Plate (3-73A)	20—34	1	
10584	**Screw and Lockwasher Assembly,** securing Cover Plate (4789/B)		2	
10586	**Gasket,** between Extension Case and Rear Pump Flange (3-146)	20—35	1	
10587	**Bolt,** $\frac{3}{8}$" × 1$\frac{1}{4}$", securing Extension Case and Rear Pump to Transmission Case (179841)		2	

AUTOMATIC TRANSMISSION UNIT

Part No.	Description	Plate No.	No. per Unit	Remarks
10588	**Bolt**, ⅜" × 3¾", securing Extension Case and Rear Pump to Transmission Case (446641)		1	
C.25692	**Stud**, Special, securing Extension Case and Rear Pump to Transmission Case and fixing Gear Control Cable Abutment Bracket (4302G)		2	**See also Automatic Transmission Control**
9910	**Lockwasher**, on Bolts and Studs (X2978DR)		5	
10589	**Bearing**, at rear of Extension Case, for Mainshaft (3220G)	20—36	1	
10590	**Snap Ring**, around Mainshaft Bearing (T.90A-6½)	20—37	1	
10591	**Spacing Washer**, between Bearing and Oil Collector Sleeve (3F-71)	20—38	1	
C.22852	**HOUSING FOR SPEEDOMETER DRIVEN GEAR (8G-7)**	20—39	1	
10592	**Gasket**, between Housing and Extension Case (T87D-145¼C)	20—40	1	
10587	**Bolt**, ⅜" × 1½", securing Housing to Extension Case (179841)		2	
8435	**Bolt**, ⅜" × 1", securing Housing to Extension Case (179839)		3	
8427	**Lockwasher**, on Bolts (JGM.103321)		5	
10593	**Oil Seal Assembly**, at rear of Housing (SH-110)	20—41	1	
C.22348	**SPEEDOMETER DRIVEN GEAR**	20—42	1	
C.21297	**BEARING FOR SPEEDOMETER DRIVEN GEAR**	20—42A	1	
C.12377/1	**Oil Seal**, at bottom of Bearing	20—42B	1	
C.21058	**'O' Ring**, around Bearing	20—43	1	
C.21073	**Plate**, retaining Gear in Housing	20—44	1	
UCS.125/4R	**Screw**, Set, securing Plate		2	
FG.104/X	**Washer**, Spring, on Setscrews		2	
C.22782	**FLANGE, CONNECTING TRANSMISSION UNIT TO PROPELLER SHAFT (4644-AW)**	20—45	1	
10594	**Nut**, securing Flange to Mainshaft (T2-50B)	20—46	1	
10595	**Lockwasher**, under Nut (103335)	20—47	1	
10596	**Washer** (Special) under Lockwasher (FW6-50¼P)	20—48	1	
10597	**FRONT PUMP ASSEMBLY (3-6A60C)**	20—49	1	
10598	**Oil Seal Assembly**, for Front Pump (3-62)	20—50	1	
10599	**Sealing Ring**, between Front Pump and Transmission Case (3-61)	20—51	1	
10600	**Bolt**, ¼" × 2", securing Front Pump to Transmission Case (X807)		4	

SECTION 18

AUTOMATIC TRANSMISSION UNIT

Part No.	Description	Plate No.	No. per Unit	Remarks
10601	**FRONT CLUTCH ASSEMBLY (5AB-3A70)**		1	
10602	**Piston Assembly,** for Front Clutch (10A-A35)	20—52	1	
10603	**Cylinder,** for Front Clutch (5AB-70)	20—53	1	
10604	**Sealing Ring,** Inner, for Piston (3-34)	20—54	1	
10605	**Sealing Ring,** Outer, for Piston (5L-36)	20—55	1	
10606	**Split Ring,** seating Front Clutch Spring (5C-33)	20—56	1	
10607	**Spring,** for Front Clutch (3-37)	20—57	1	
10608	**Snap Ring,** retaining Front Clutch Spring (4755)	20—58	1	
10609	**Pressure Plate,** for Front Clutch (5C-175A)	20—59	1	**NOT SUPPLIED SEPARATELY. USE SERVICE KIT ON Page 18—8**
10610	**Clutch Plate** (Drive) for Front Clutch (3-176)	20—60	3	
10611	**Clutch Plate** (Friction) for Front Clutch (3-A66B)	20—61	4	
10612	**Hub,** carrying Front Clutch Plates (5C-40)	20—62	1	
10613	**Thrust Washer** (Fibre) between Hub and Input Shaft (5C-17)	20—63	1	
10614	**Input Shaft Assembly** (5C-A16)	20—64	1	
10615	**Thrust Washer,** between Input Shaft and Transmission Case (5C-15)	20—65	1	
10616	**Snap Ring,** retaining Input Shaft (4751)	20—66	1	
11546	**REAR CLUTCH AND FRONT DRUM ASSEMBLY (7B-4A50)**		1	
11547	**Front Drum Assembly** (7B-1A50)	20—67	1	
11548	**Piston Assembly,** for Rear Clutch (8G-A45)	20—68	1	
10620	**Sealing Ring,** Inner, for Piston (3-44)	20—69	1	
10621	**Sealing Ring,** Outer, for Piston (3-46)	20—70	1	
10622	**Spring,** for Rear Clutch (3-47A)	20—71	1	
10623	**Seat,** for Rear Clutch Spring (3-48A)	20—72	1	
10624	**Snap Ring,** retaining Spring Seat (4753)	20—73	1	
10625	**Clutch Plate** (Friction) for Rear Clutch (7A-A66)	20—74	5	**NOT SUPPLIED SEPARATELY. USE SERVICE KIT ON PAGE 18—8**
10626	**Clutch Plate** (Drive) for Rear Clutch (3-65)	20—75	5	
10627	**Pressure Plate,** for Rear Clutch (5L-67)	20—76	1	
10616	**Snap Ring,** retaining Rear Clutch Plates in Front Drum (4751)	20—77	1	
10628	**Thrust Washer** (Bronze) between Front Clutch Cylinder and Front Drum (3-18)	20—78	1	
10629	**Thrust Washer** (Steel) at rear of Bronze Thrust Washer (3-21)	20—79	1	
11547	**FRONT DRUM ASSEMBLY (7B-1A50)**	20—67	1	
9786	**Needle Bearing,** in Front Drum (4804Q)	20—80	1	
10631	**BRAKE BAND FOR FRONT DRUM (7-5A55)**	20—81	1	
10632	**Strut** (Servo) operating Brake Band (3-57A)	20—82	1	

Part No.	Description	Plate No.	No. per Unit	Remarks
10633	**FRONT SERVO ASSEMBLY (6-5A120)**		1	
10634	**Body,** for Front Servo (6-120)	20—83	1	
10635	**Lever,** operating Front Servo Strut (3-127A)	20—84	1	
10636	**Pivot Pin,** for Operating Lever (3-118)	20—85	1	
9902	**Roll Pin,** securing Pivot Pin in Servo Body (3-138)	20—86	1	
10637	**Screw,** for Front Servo Adjustment (4626B)	20—87	1	
9904	**Nut,** locking Screw (114503)	20—88	1	
10638	**Return Spring,** for Front Servo Piston (5AB-125)	20—89	1	
10639	**Piston Assembly,** for Front Servo (3H-A121)	20—90	1	
10640	**'O' Ring** (Small) on Piston (3-129)	20—91	1	
10641	**'O' Ring** (Large) on Piston (3-122)	20—92	1	
10642	**Piston Sleeve,** for Front Servo (3-119)	20—93	1	
10643	**Sealing Ring,** for Piston Sleeve (3-124)	20—94	1	
10644	**Snap Ring,** retaining Piston and Sleeve in Body (4749)	20—95	1	
10587	**Bolt,** $\frac{3}{8}$" × 1$\frac{1}{4}$", securing Front Servo to Transmission Case (179841)		1	
8427	**Lockwasher,** on Bolt (JGM.103321)		1	
10645	**FORWARD SUN GEAR ASSEMBLY (7D-A104)**	20—96	1	
10646	**Sealing Ring,** at front of Forward Sun Gear Shaft (3-32)	20—97	2	
10647	**Sealing Ring,** at centre of Forward Sun Gear Shaft (3-27)	20—98	2	
10648	**Sealing Ring,** at rear of Forward Sun Gear Shaft (3-31A)	20—99	2	
10649	**Thrust Bearing** (Needle) between Forward Sun Gear and Planetary Carrier (4830A)	20—100	1	
10650	**Race,** for Thrust Bearing (7D-20)	20—101	1	
10651	**Thrust Washer** (Bronze) between Forward and Reverse Sun Gears (3-19)	20—102	1	
10652	**CENTRE SUPPORT ASSEMBLY (8-A75)**	20—103	1	
10653	**Screw,** securing Centre Support in Transmission Case (4626)	20—104	2	
9910	**Lockwasher,** on Screws (X2978DR)		2	
10654	**PLANETARY GEARS AND REAR DRUM ASSEMBLY (8-3A150)**	20—105	1	
10655	**Outer Race,** for One-Way Clutch (8-148)	20—106	1	
10656	**Snap Ring,** retaining Outer Race (4820)	20—107	1	
10657	**Thrust Washer,** between Planetary Carrier and Mainshaft (.061"/.063" thick) (5C-24)	20—108	1	**SELECTIVE SIZES. USE AS NECESSARY TO MAINTAIN CORRECT END FLOAT**
10658	**Thrust Washer,** between Planetary Carrier and Mainshaft (.067"/.069" thick) (5C-24A)	20—108	1	
10659	**Thrust Washer,** between Planetary Carrier and Mainshaft (.074"/.076" thick) (5C-24B)	20—108	1	
10660	**Thrust Washer,** between Planetary Carrier and Mainshaft (.081"/.083" thick) (5C-24C)	20—108	1	
10661	**Thrust Washer,** between Planetary Carrier and Mainshaft (.092"/.094" thick) (5C-24D)	20—108	1	
10662	**Thrust Washer,** between Planetary Carrier and Mainshaft (.105"/.107" thick) (5C-24E)	20—108	1	
10663	**ONE-WAY CLUTCH ASSEMBLY IN REAR DRUM (8-275B)**	20—109	1	

SECTION 18

AUTOMATIC TRANSMISSION UNIT

Part No.	Description	Plate No.	No. per Unit	Remarks
10664	**BRAKE BAND FOR REAR DRUM (5C-A155)**	20—110	1	
10665	**Strut** (Servo) operating Brake Band (3-156)	20—111	1	
10666	**Anchor Strut,** for Rear Brake Band (3-157)	20—112	1	
1 567	**REAR SERVO ASSEMBLY (5C-4A130)**		1	
10668	**Body Assembly,** for Rear Servo (5C-1A130)	20—113	1	
10669	**Lever,** operating Rear Servo Strut (5C-137)	20—114	1	
10670	**Shaft,** for Lever (7B-136)	20—115	1	
9902	**Roll Pin,** securing Shaft in Body (3-138)	20—116	1	
10671	**Piston,** for Rear Servo (8-131)	20—117	1	
10672	**" O " Ring,** on Piston (3-132)	20—118	1	
10673	**Return Spring,** for Rear Servo Piston (3-135)	20—119	1	
10674	**Plate,** retaining Return Spring (5-134)	20—120	1	
10675	**Snap Ring,** securing Plate (4748)	20—121	1	
10676	**Screw,** securing Rear Servo to Transmission Case (4626A)		1	
10677	**Bolt,** $\frac{7}{16}$" × 1$\frac{7}{8}$", securing Rear Servo to Transmission Case (X724)		1	
10678	**Lockwasher,** on Screw and Bolt (103322)		2	
10679	**RING GEAR, DRIVING MAINSHAFT (5-6)**	20—122	1	
10680	**MAINSHAFT ASSEMBLY (8A-A2)**	20—123	1	
10681	**Snap Ring,** retaining Mainshaft in Ring Gear (4756)	20—124	1	**SELECTIVE SIZES**
10682	**Snap Ring,** retaining Mainshaft in Ring Gear (4756A)	20—124	1	
10683	**Snap Ring,** retaining Mainshaft in Ring Gear (4756B)	20—124	1	
10684	**REAR PUMP ASSEMBLY (5L-4A160)**	20—125	1	
10685	**Plate,** retaining Rear Pump Gears (3-165C)	20—126	1	
10686	**Screw,** $\frac{1}{4}$", **and Lockwasher Assembly,** securing Plate (4789)		5	
10965	**Screw, No. 10, and Lockwasher Assembly,** securing Plate (4789A)		1	
10690	**Key,** in Mainshaft, driving Rear Pump (103905)	20—127	1	
10691	**Gasket,** between Rear Pump and Transmission Case (3-161)	20—128	1	
10692	**Oil Inlet Tube,** for Rear Pump (3-187)	20—129	1	
10693	**" O " Ring,** on Oil Inlet Tube (3-191)	20—130	1	
10694	**Oil Outlet Tube,** for Rear Pump (3-189)	20—131	1	
10695	**' O ' Ring,** on Oil Outlet Tube (3-188)	20—132	1	

AUTOMATIC TRANSMISSION UNIT

Part No.	Description	Plate No.	No. per Unit	Remarks
10696	**GOVERNOR ASSEMBLY (5G-7A95B)**	20—133	1	
10697	**Governor Body** (5G-95B)	20—134	1	
10698	**Screw**, securing Body to Sleeve (114361)		2	
8426	**Lockwasher**, on Screws (JGM.103319)		2	
10699	**Governor Weight** (5G-97A)	20—135	1	
10700	**Governor Valve** (8-96B)	20—136	1	
10701	**Spring**, for Governor (7B-99)	20—137	1	
10702	**Retainer**, holding Spring on Governor Weight (5G-98)	20—138	1	
10703	**Cover Plate**, at side of Governor Body (7B-93)	20—139	1	
10704	**Screw**, securing Cover Plate (X2380BL)		2	
9922	**Ball**, ¼" locating Governor on Mainshaft (147485)	20—140	1	
10705	**Snap Ring**, retaining Governor on Mainshaft (4752)	20—141	1	
10706	**OIL COLLECTOR SLEEVE (7B-90A)**	20—142	1	
9920	**Piston Ring**, on Mainshaft, for Oil Collector Sleeve (3-86)	20—143	4	
10708	**Oil Collector Tube**, Front (7B-92)	20—144	1	
10709	**Oil Collector Tube**, Intermediate (7B-88)	20—145	1	
10710	**Oil Collector Tube**, Rear (7B-98)	20—146	1	
C.22347	**DRIVE GEAR, FOR SPEEDOMETER (8G-169)**	20—147	1	
10711	**VALVE BODIES ASSEMBLY (8-5A200C)**	21—1	1	
10945	**Spring**, for Rear Pump Check Valve (3-228A)		1	
10946	**Spring**, for Front Servo Release Orifice Valve (5AB-223)		1	
10947	**Spring**, for 1st/2nd Shift Valve (5H-256)		1	
10948	**Return Spring**, for Throttle Cam (8G-85)		1	
10949	**Spring**, for D1/D2 Control Valve (5-113)		1	
10950	**Spring**, for Transition Valve (8-292A)		1	
10951	**Spring**, for Servo Orifice Control Valve (5-296)		2	
10952	**Leaf Spring**, for Throttle Valve Return (5-238)		1	
10953	**Spring**, Inner, for 2nd/3rd Valve (8G-223)		1	
10955	**Spring**, Outer, for 2nd/3rd Valve (5H-222)		1	
10956	**Spring**, at inner end of Throttle Modulator Valve (5-288)		1	
10957	**Spring**, at outer end of Throttle Modulator Valve (8G-215)		1	
10958	**Spring**, Inner, for Compensator (5H-214A)		1	
10959	**Spring**, Outer, for Compensator (8G-212)		1	
10960	**Throttle Spring** (3-208)		1	
10961	**Bolt**, ¼" × 2½", for Assembly of Valve Bodies (179807)		1	
8426	**Lockwasher**, on Bolts (JGM.103319)		4	
10962	**Screw, Cheese Head, and Lockwasher**, for Assembly of Valve Bodies (189384)		15	
10963	**Screw, Cheese Head, and Lockwasher**, for Assembly of Valve Bodies (189385)		2	
10964	**Screw, Cheese Head, and Lockwasher**, for Assembly of Valve Bodies (189386)		3	
10965	**Screw, Pan Head, and Lockwasher**, for Assembly of Valve Bodies (4789A)		1	
10704	**Screw**, Countersunk Head, for Assembly of Valve Bodies (X2380BL)		2	
10712	**Bolt**, securing Valve Bodies Assembly to Transmission Case (179802)		3	
8426	**Lockwasher**, on Bolts (JGM.103319)		3	
11244	**Control Rod**, operating Kick-down Cam (8K-82)	21—2	1	

SECTION 18

AUTOMATIC TRANSMISSION UNIT

Part No.	Description	Plate No.	No. per Unit	Remarks
10714	**REGULATOR ASSEMBLY (5G-3A240)**	21—3	1	
10715	**Spring,** for Primary Valve (5-247)		1	
10716	**Seat,** for Primary Valve Spring (5-248)		1	
10717	**Spring,** for Secondary Valve (5G-246)		1	
10718	**Spacer,** for Secondary Valve (5-258)		1	
10719	**Plate,** retaining Valve Springs (5-249)		1	
10720	**Screw,** $\frac{5}{16}$" × $\frac{7}{8}$", securing Regulator to Transmission Case (4626D)		2	
5908	**Lockwasher,** on Screws (JGM.103320)		2	
	OIL TUBES			
10721	**Oil Tube,** Front Brake Band Lubrication (7A-186)	21—4	1	
10722	**Oil Tube,** connecting Rear Pump to Regulator (5C-182)	21—5	1	
10723	**Oil Tube** (Compensator) connecting Valve Body to Regulator (5-183)	21—6	1	
10724	**Oil Tube** (Control Pressure) connecting Valve Body to Regulator (5-184)	21—7	1	
10725	**Oil Tube** (Apply and Release) connecting Valve Body to Front Servo (5-185)	21—8	2	
10726	**OIL FILTER ASSEMBLY (5X-A190A)**	21—9	1	
10727	**Clip,** retaining Oil Filter (5-177)	21—10	1	
C.25690	**OIL PAN ASSEMBLY (8G-A180A)**	21—11	1	
10728	**Gasket,** between Oil Pan and Transmission Case (5C-181)	21—12	1	
10729	**Bolt Assembly,** securing Oil Pan to Transmission Case (4776L)		14	
10970	**OIL SEAL AND 'O' RING KIT (8EA-500)**		1	
	consisting of:—			
	Oil Seal, Transmission Case	1		
	Oil Seal, Front Pump	1		
	Oil Seal, Speedometer Gear Housing	1		
	Sealing Ring, Rear Clutch Piston (Inner)	1		
	Sealing Ring, Rear Clutch Piston (Outer)	1		
	Sealing Ring, Front Clutch Piston (Inner)	1		
	Sealing Ring, Front Clutch Piston (Outer)	1		
	'O' Ring, Front Servo (Small)	1		
	'O' Ring, Front Servo (Large)	1		
	Sealing Ring, Front Clutch Piston Sleeve	1		
	'O' Ring, Rear Pump Inlet Tube	1		
	'O' Ring, Rear Servo	1		
	Sealing Ring, Front Pump	1		
	'O' Ring, Rear Pump Outlet Tube	1		
10971	**GASKETS KIT (8EA-501)**		1	
	consisting of:—			
	Gasket, Rear Pump	1		
	Gasket, Extension Case Cover	1		
	Gasket, Extension Case	1		
	Gasket, Oil Pan	1		
	Gasket, Speedometer Gear Housing	1		

Part No.	Description	Plate No.	No. per Unit	Remarks
10972	**PISTON RING AND METAL SEALING RING KIT (8EA-503)**		1	
	consisting of:—			
	Piston Ring, Mainshaft	4		
	Sealing Ring, Forward Sun Gear, Front	2		
	Sealing Ring, Forward Sun Gear, Centre	2		
	Sealing Ring, Forward Sun Gear, Rear	2		
10973	**THRUST WASHER KIT (8EG-504)**		1	
	consisting of:—			
	Thrust Washer, Front Clutch Hub	1		
	Thrust Washer, Input Shaft	1		
	Thrust Washer, Front Clutch Cylinder	1		
	Thrust Washer, Front Clutch Cylinder	1		
	Thrust Washer, Forward/Reverse Sun Gear	1		
	Thrust Washer, Planetary Carrier/Mainshaft	1		
	Thrust Washer, Planetary Carrier/Mainshaft	1		
	Thrust Washer, Planetary Carrier/Mainshaft	1		
	Thrust Washer, Planetary Carrier/Mainshaft	1		
	Thrust Washer, Planetary Carrier/Mainshaft	1		
	Thrust Washer, Planetary Carrier/Mainshaft	1		
10974	**FRONT CLUTCH PLATES KIT (8EA-505)**		1	
	consisting of:—			
	Pressure Plate	1		
	Drive Plate	3		
	Friction Plate	4		
	Sealing Ring, Inner	1		
	Sealing Ring, Outer	1		
10975	**REAR CLUTCH PLATES KIT**		1	
	consisting of:—			
	Pressure Plate	1		
	Drive Plate	5		
	Friction Plate	5		
	Sealing Ring, Inner	1		
	Sealing Ring, Outer	1		

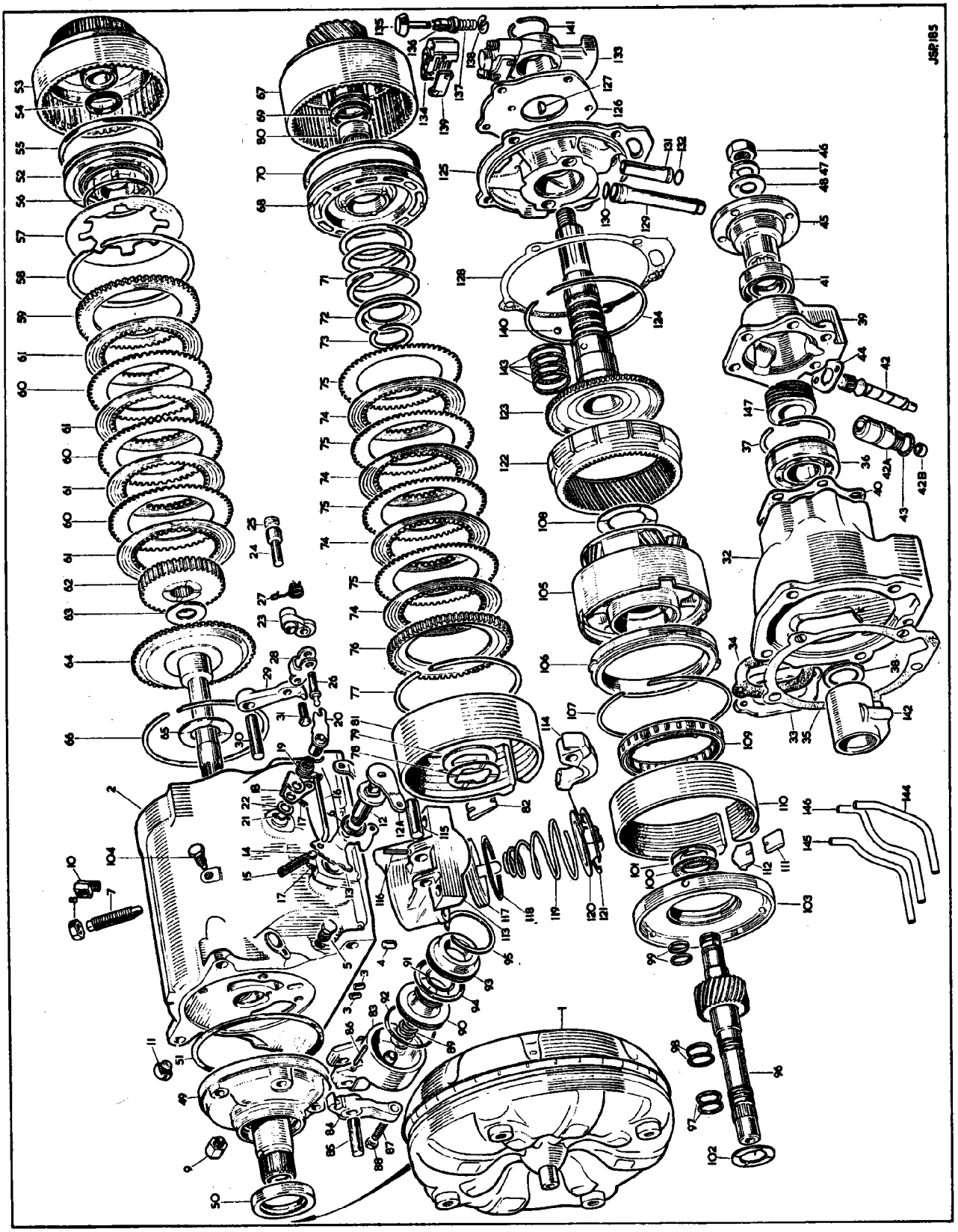

PLATE 20

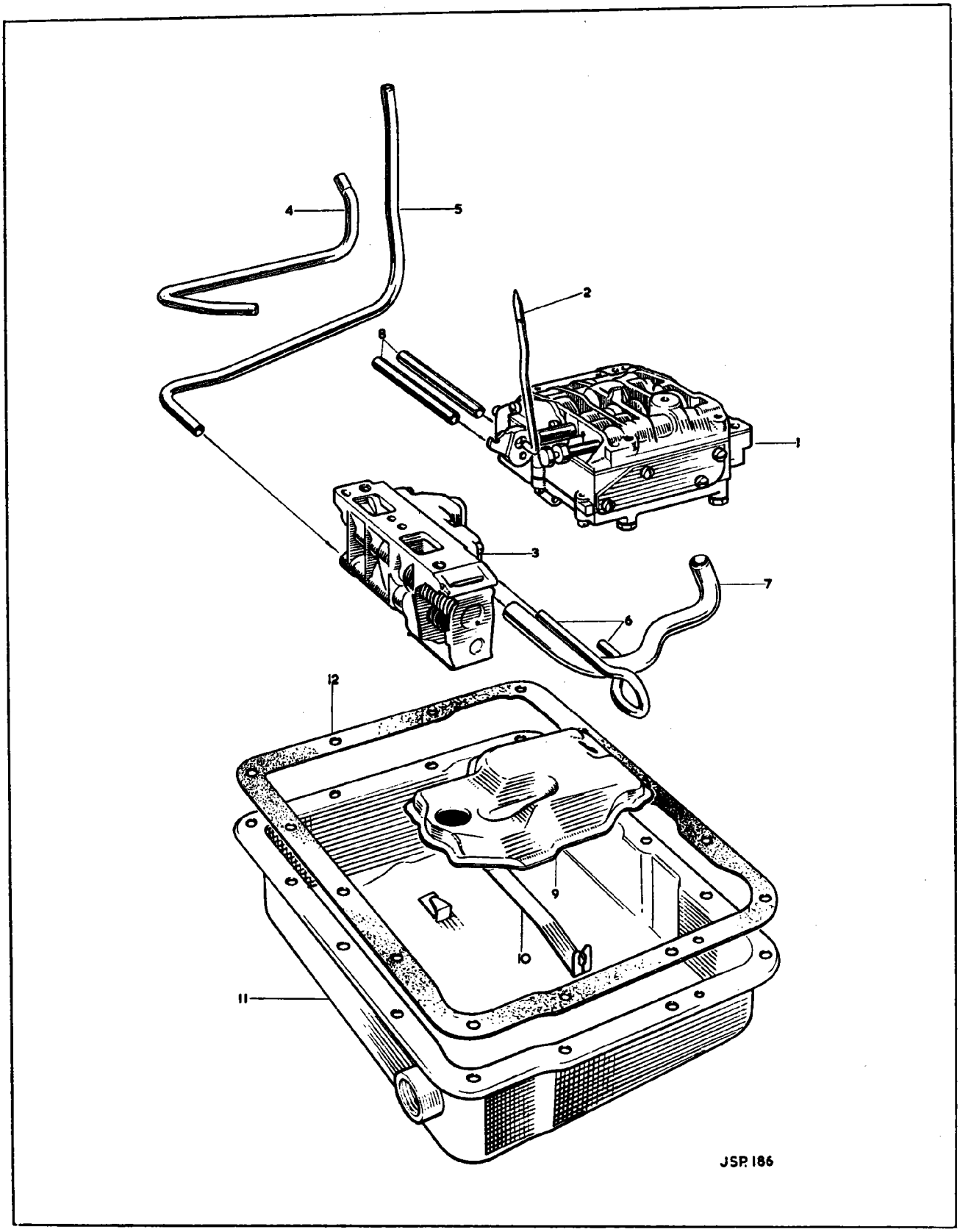

PLATE 21

MOUNTING DETAILS

AUTOMATIC TRANSMISSION

Part No.	Description	Plate No.	No. per Unit	Remarks
C.26702	**CONVERTER HOUSING**	22—1	1	
UFB.137/32R	**Bolt,** securing Convertor Housing to Cylinder Block		9	
C.726	**Washer,** Shakeproof, on Bolts		9	
C.6866	**Stud,** mounting Transmission Unit to Converter Housing	22—2	4	
UFN.143/L	**Nut,** on Studs		4	
C.727	**Washer,** Shakeproof, under Nuts		4	
C.22947	**Stoneguard Assembly,** over Apertures at sides of Converter Housing	22—3	3	
UCS.119/4R	**Screw,** Set, securing Stoneguards		4	
C.723/A	**Washer,** Shakeproof, on Setscrews		4	
AW.102/T	**Washer,** Plain, under Shakeproof Washers		4	
C.22361	**COVER AT BOTTOM OF CONVERTER HOUSING**	22—4	1	
C.6874	**COVER, AT FRONT OF CONVERTER HOUSING**	22—5	1	
UCS.125/4R	**Screw,** Set, securing Covers		8	
C.724	**Washer,** Shakeproof, on Setscrews		8	
C.4795	**R.H. SUPPORT BRACKET**	22—6	1	
C.11942	**L.H. SUPPORT BRACKET ASSEMBLY**	22—7	1	
UFB.131/10R	**Bolt,** securing Support Brackets to Cylinder Block		4	
UFN.131/L	**Nut,** on Bolts		4	
FG.105/X	**Washer,** Spring, under Nuts		4	
UFB.137/32R	**Bolt,** securing Support Brackets to Converter Housing		6	
UFN.137/L	**Nut,** on Bolts		6	
FG.106/X	**Washer,** Spring, under Nuts		6	
C.25412	**DRIVE PLATE ASSEMBLY, ON CRANKSHAFT, FOR ATTACHMENT OF TORQUE CONVERTER**	22—8	1	
C.2313	**Dowel,** locating Drive Plate on Crankshaft	22—9	2	
C.4855	**Screw,** Set, securing Drive Plate to Crankshaft	22—10	10	
C.4810	**Plate,** locking Setscrews	22—11	1	
C.16682	**Screw,** Set, securing Torque Converter to Drive Plate	22—12	4	
C.25446	**Tab Washer,** locking Setscrews	22—13	4	
C.25943	**BRACKET ASSEMBLY FOR REAR ENGINE MOUNTING**	22—14	1	
C.12335	**Spring Seat** (Rubber) inside Bracket		1	
C.12265	**Centre Bush** (Rubber)		1	
UFB.131/10R	**Bolt,** securing Mounting Bracket to Body		4	
C.12027	**Spacer,** on Bolts, between Mounting Bracket and Body	22—15	4	
FG.105/X	**Washer,** Spring, on Bolts		4	
FW.105/T	**Washer,** Plain, under Spring Washers		4	

SECTION 19

MOUNTING DETAILS

AUTOMATIC TRANSMISSION

Part No.	Description	Plate No.	No. per Unit	Remarks
C.24217	**COIL SPRING, FOR REAR ENGINE MOUNTING**	22—16	1	
C.21932	**Retainer**, at top of Coil Spring	22—17	1	
C.12335	**Spring Seat** (Rubber) inside Retainer	22—18	1	
C.19276	**Pin Assembly**, securing Retainer to Transmission Unit and locating Support Bracket	22—19	1	
C.27057	**OIL OUTLET PIPE, FROM FRONT CONNECTION ON TRANSMISSION UNIT TO FLEXIBLE HOSE**	22—20	1	
C.25971/2	**FLEXIBLE HOSE, FROM OIL OUTLET PIPE TO BOTTOM WATER PIPE (12" LONG)**	22—21	1	
C.25971/5	**FLEXIBLE HOSE, FROM BOTTOM WATER PIPE TO OIL RETURN PIPE (9" LONG)**	22—22	1	
C.2905/2	**Clip**, securing Hoses	22—23	4	
C.27058	**OIL RETURN PIPE, FROM FLEXIBLE HOSE TO REAR CONNECTION ON TRANSMISSION UNIT**	22—24	1	
C.27087	**BRACKET, ON OIL SUMP BOLT, SUPPORTING OIL PIPES AND HOSES AT FRONT**	22—25	1	
C.24549	**BRACKET, ON OIL SUMP BOLT, SUPPORTING OIL PIPES AT REAR**	22—26	1	
C.21390	**CLAMP SUPPORTING OIL PIPES**	22—27	1	
C.24599	**Clip**, holding Oil Pipes to Brackets and Clamp	22—28	3	
UFS.119/3R	**Screw**, Set, securing Clips		3	
UFN.119/L	**Nut**, on Setscrews		3	
AG.102/X	**Washer**, Spring, under Nuts		3	
C.27085	**TRANSMISSION DIPSTICK ASSEMBLY**	22—29	1	
C.27083	**TUBE ASSEMBLY, HOUSING DIPSTICK**	22—30	1	
C.27153	**Clip**, retaining Dipstick Tube	22—31	1	
C.27086	**Support Bar**, on Exhaust Manifold Stud, for Clip	22—32	1	
UFS.131/5R	**Screw**, Set, securing Clip to Support Bar		1	
FG.105/X	**Washer**, Spring, on Setscrew		1	

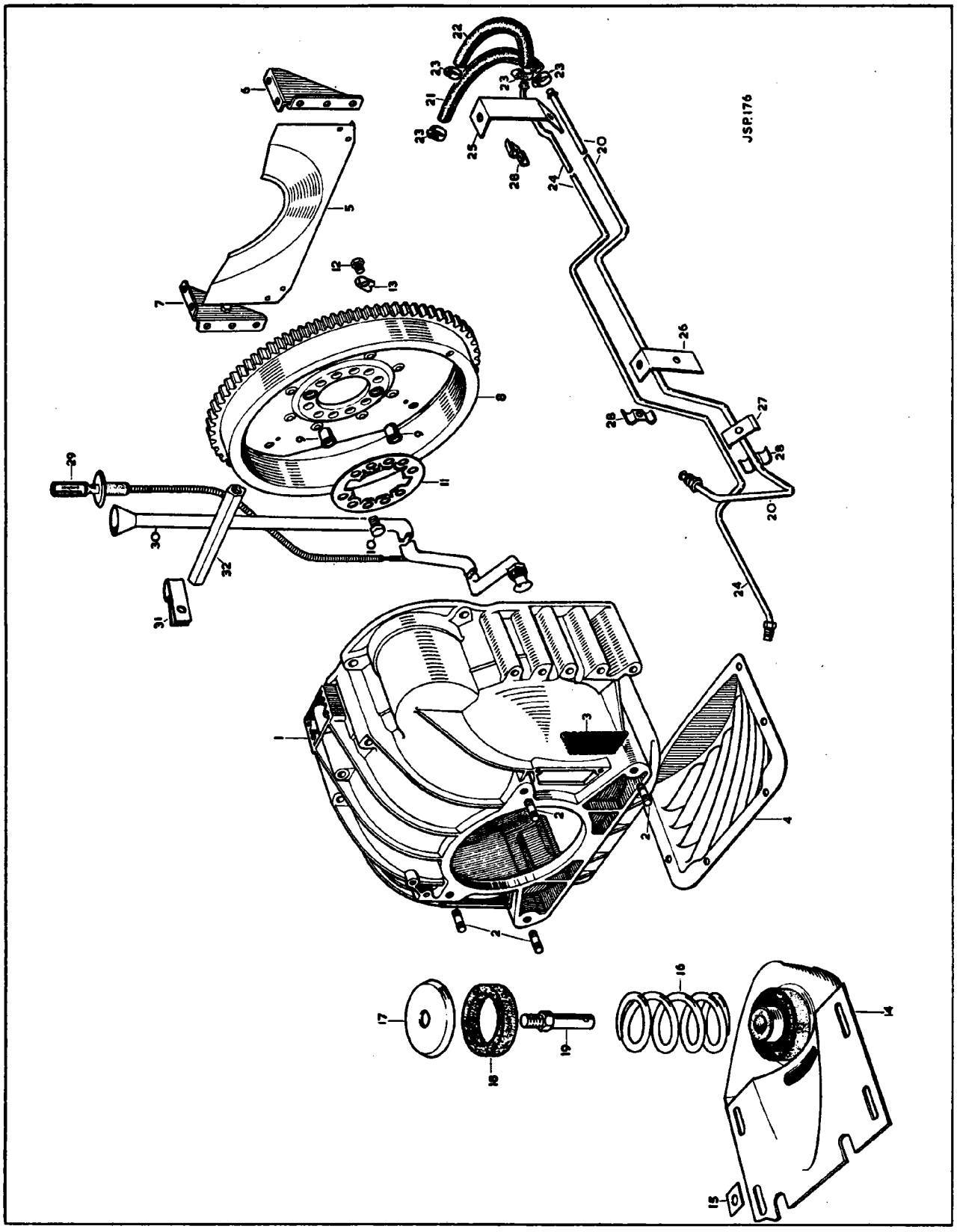

PLATE 22

SECTION 18

AUTOMATIC TRANSMISSION UNIT

Part No.	Description	Plate No.	No. per Unit	Remarks
C.26900	**AUTOMATIC TRANSMISSION ASSEMBLY (MODEL 8) (AS4-8G) LESS CONVERTER**		1	
C.22781	**CONVERTER ASSEMBLY (8EG-1A.368)**	20—1	1	
10563	**TRANSMISSION CASE ASSEMBLY (8G-2A1)**	20—2	1	
10564	**Plug,** sealing holes in Transmission Case Flange (3-111)	20—3	2	
10565	**Dowel,** for Front Servo (3-279)	20—4	1	
10566	**Plug,** for Pressure Test (X1516H)	20—5	1	
10567	**Oil Seal,** for Manual Control Shaft (3-107A)	20—6	1	
10568	**Screw,** for Rear Servo Adjustment (4626E)	20—7	1	
10569	**Nut,** locking Screw (4775F)	20—8	1	
C.23415	**Union,** for Oil Outlet Pipe (116341)	20—9	1	
C.23414	**Union,** for Oil Return Pipe (137422)	20—10	1	
10570	**Breather Assembly,** on Transmission Case (4740A)	20—11	1	
C.25691	**Manual Control Shaft Assembly,** in Transmission Case (8K-76)	20—12	1	
C.25817	**Selector Lever,** on Manual Control Shaft	20—12A	1	
C.8737/3	**Nut,** Self-Locking, securing Selector Lever		1	
C.25917	**Spacer,** under Self-Locking Nut		1	
10571	**Lever Assembly,** on Shaft, for Manual Valve Detent (8H-A78)	20—13	1	
10572	**Locknut,** retaining Lever to Shaft (4775A)		1	
9874	**Ball,** $\frac{3}{8}$", positioning Detent Lever (453593)	20—14	1	
10573	**Spring,** tensioning Ball (8H-83)	20—15	1	
10574	**Link,** connecting Detent Lever to Torsion Lever (3-266)	20—16	1	
9875	**Clip,** retaining Link (4857A)	20—17	2	
9876	**Torsion Lever,** for Parking Brake Linkage (3-261)	20—18	1	
9877	**Spring,** providing tension between Torsion Lever and Forked Lever (3-264A)	20—19	1	
9878	**Forked Lever,** engaging Ball Pin in Toggle Lever (3-A262)	20—20	1	
9879	**Clip,** retaining Torsion Lever, Forked Lever, and Spring (4743A)	20—21	1	
9890	**Washer,** Plain, under Clip (3-321)	20—22	1	
9880	**Toggle Lever,** for Parking Brake Pawl (3-272)	20—23	1	
10575	**Toggle Pin** (shouldered) pivoting Toggle Lever (3-276)	20—24	1	
10576	**Plug,** retaining Toggle Pin (4572J)	20—25	1	
10577	**Ball Pin,** securing Link to Toggle Lever (8-274)	20—26	1	
10578	**Spring,** on Ball Pin, tensioning Parking Brake Pawl (8-271)	20—27	1	
9888	**Link,** connecting Toggle Lever to Parking Brake Pawl (3-273)	20—28	1	
10579	**Pawl,** for Parking Brake (3-268)	20—29	1	
10580	**Pivot Pin,** for Parking Brake Pawl (3-269)	20—30	1	
9889	**Pin,** securing Pawl to Link (3-275)	20—31	1	
10581	**EXTENSION CASE ASSEMBLY (8G-A107)**	20—32	1	
10582	**Cover Plate,** sealing Governor Inspection Aperture (3-74A)	20—33	1	
10583	**Gasket,** under Cover Plate (3-73A)	20—34	1	
10584	**Screw and Lockwasher Assembly,** securing Cover Plate (4789/B)		2	
10586	**Gasket,** between Extension Case and Rear Pump Flange (3-146)	20—35	1	
10587	**Bolt,** $\frac{3}{8}$" × 1$\frac{1}{4}$", securing Extension Case and Rear Pump to Transmission Case (179841)		2	

AUTOMATIC TRANSMISSION UNIT

Part No.	Description	Plate No.	No. per Unit	Remarks
10588	**Bolt**, ⅜" × 3¾", securing Extension Case and Rear Pump to Transmission Case (446641)		1	
C.25692	**Stud**, Special, securing Extension Case and Rear Pump to Transmission Case and fixing Gear Control Cable Abutment Bracket (4302G)		2	**See also Automatic Transmission Control**
9910	**Lockwasher**, on Bolts and Studs (X2978DR)		5	
10589	**Bearing**, at rear of Extension Case, for Mainshaft (3220G)	20—36	1	
10590	**Snap Ring**, around Mainshaft Bearing (T.90A-6½)	20—37	1	
10591	**Spacing Washer**, between Bearing and Oil Collector Sleeve (3F-71)	20—38	1	
C.22852	**HOUSING FOR SPEEDOMETER DRIVEN GEAR (8G-7)**	20—39	1	
10592	**Gasket**, between Housing and Extension Case (T87D-145¼C)	20—40	1	
10587	**Bolt**, ⅜" × 1½", securing Housing to Extension Case (179841)		2	
8435	**Bolt**, ⅜" × 1", securing Housing to Extension Case (179839)		3	
8427	**Lockwasher**, on Bolts (JGM.103321)		5	
10593	**Oil Seal Assembly**, at rear of Housing (SH-110)	20—41	1	
C.22348	**SPEEDOMETER DRIVEN GEAR**	20—42	1	
C.21297	**BEARING FOR SPEEDOMETER DRIVEN GEAR**	20—42A	1	
C.12377/1	**Oil Seal**, at bottom of Bearing	20—42B	1	
C.21058	**'O' Ring**, around Bearing	20—43	1	
C.21073	**Plate**, retaining Gear in Housing	20—44	1	
UCS.125/4R	**Screw**, Set, securing Plate		2	
FG.104/X	**Washer**, Spring, on Setscrews		2	
C.22782	**FLANGE, CONNECTING TRANSMISSION UNIT TO PROPELLER SHAFT (4644-AW)**	20—45	1	
10594	**Nut**, securing Flange to Mainshaft (T2-50B)	20—46	1	
10595	**Lockwasher**, under Nut (103335)	20—47	1	
10596	**Washer** (Special) under Lockwasher (FW6-50¼P)	20—48	1	
10597	**FRONT PUMP ASSEMBLY (3-6A60C)**	20—49	1	
10598	**Oil Seal Assembly**, for Front Pump (3-62)	20—50	1	
10599	**Sealing Ring**, between Front Pump and Transmission Case (3-61)	20—51	1	
10600	**Bolt**, ¼" × 2", securing Front Pump to Transmission Case (X807)		4	

SECTION 18

AUTOMATIC TRANSMISSION UNIT

Part No.	Description	Plate No.	No. per Unit	Remarks
10601	**FRONT CLUTCH ASSEMBLY (5AB-3A70)**		1	
10602	**Piston Assembly,** for Front Clutch (10A-A35)	20—52	1	
10603	**Cylinder,** for Front Clutch (5AB-70)	20—53	1	
10604	**Sealing Ring,** Inner, for Piston (3-34)	20—54	1	
10605	**Sealing Ring,** Outer, for Piston (5L-36)	20—55	1	
10606	**Split Ring,** seating Front Clutch Spring (5C-33)	20—56	1	
10607	**Spring,** for Front Clutch (3-37)	20—57	1	
10608	**Snap Ring,** retaining Front Clutch Spring (4755)	20—58	1	
10609	**Pressure Plate,** for Front Clutch (5C-175A)	20—59	1	**NOT SUPPLIED SEPARATELY. USE SERVICE KIT ON Page 18—8**
10610	**Clutch Plate** (Drive) for Front Clutch (3-176)	20—60	3	
10611	**Clutch Plate** (Friction) for Front Clutch (3-A66B)	20—61	4	
10612	**Hub,** carrying Front Clutch Plates (5C-40)	20—62	1	
10613	**Thrust Washer** (Fibre) between Hub and Input Shaft (5C-17)	20—63	1	
10614	**Input Shaft Assembly** (5C-A16)	20—64	1	
10615	**Thrust Washer,** between Input Shaft and Transmission Case (5C-15)	20—65	1	
10616	**Snap Ring,** retaining Input Shaft (4751)	20—66	1	
11546	**REAR CLUTCH AND FRONT DRUM ASSEMBLY (7B-4A50)**		1	
11547	**Front Drum Assembly** (7B-1A50)	20—67	1	
11548	**Piston Assembly,** for Rear Clutch (8G-A45)	20—68	1	
10620	**Sealing Ring,** Inner, for Piston (3-44)	20—69	1	
10621	**Sealing Ring,** Outer, for Piston (3-46)	20—70	1	
10622	**Spring,** for Rear Clutch (3-47A)	20—71	1	
10623	**Seat,** for Rear Clutch Spring (3-48A)	20—72	1	
10624	**Snap Ring,** retaining Spring Seat (4753)	20—73	1	
10625	**Clutch Plate** (Friction) for Rear Clutch (7A-A66)	20—74	5	**NOT SUPPLIED SEPARATELY. USE SERVICE KIT ON PAGE 18—8**
10626	**Clutch Plate** (Drive) for Rear Clutch (3-65)	20—75	5	
10627	**Pressure Plate,** for Rear Clutch (5L-67)	20—76	1	
10616	**Snap Ring,** retaining Rear Clutch Plates in Front Drum (4751)	20—77	1	
10628	**Thrust Washer** (Bronze) between Front Clutch Cylinder and Front Drum (3-18)	20—78	1	
10629	**Thrust Washer** (Steel) at rear of Bronze Thrust Washer (3-21)	20—79	1	
11547	**FRONT DRUM ASSEMBLY (7B-1A50)**	20—67	1	
9786	**Needle Bearing,** in Front Drum (4804Q)	20—80	1	
10631	**BRAKE BAND FOR FRONT DRUM (7-5A55)**	20—81	1	
10632	**Strut** (Servo) operating Brake Band (3-57A)	20—82	1	

Part No.	Description	Plate No.	No. per Unit	Remarks
10633	**FRONT SERVO ASSEMBLY (6-5A120)**		1	
10634	**Body,** for Front Servo (6-120)	20—83	1	
10635	**Lever,** operating Front Servo Strut (3-127A)	20—84	1	
10636	**Pivot Pin,** for Operating Lever (3-118)	20—85	1	
9902	**Roll Pin,** securing Pivot Pin in Servo Body (3-138)	20—86	1	
10637	**Screw,** for Front Servo Adjustment (4626B)	20—87	1	
9904	**Nut,** locking Screw (114503)	20—88	1	
10638	**Return Spring,** for Front Servo Piston (5AB-125)	20—89	1	
10639	**Piston Assembly,** for Front Servo (3H-A121)	20—90	1	
10640	**'O' Ring** (Small) on Piston (3-129)	20—91	1	
10641	**'O' Ring** (Large) on Piston (3-122)	20—92	1	
10642	**Piston Sleeve,** for Front Servo (3-119)	20—93	1	
10643	**Sealing Ring,** for Piston Sleeve (3-124)	20—94	1	
10644	**Snap Ring,** retaining Piston and Sleeve in Body (4749)	20—95	1	
10587	**Bolt,** $\frac{3}{8}$" × 1$\frac{1}{4}$", securing Front Servo to Transmission Case (179841)		1	
8427	**Lockwasher,** on Bolt (JGM.103321)		1	
10645	**FORWARD SUN GEAR ASSEMBLY (7D-A104)**	20—96	1	
10646	**Sealing Ring,** at front of Forward Sun Gear Shaft (3-32)	20—97	2	
10647	**Sealing Ring,** at centre of Forward Sun Gear Shaft (3-27)	20—98	2	
10648	**Sealing Ring,** at rear of Forward Sun Gear Shaft (3-31A)	20—99	2	
10649	**Thrust Bearing** (Needle) between Forward Sun Gear and Planetary Carrier (4830A)	20—100	1	
10650	**Race,** for Thrust Bearing (7D-20)	20—101	1	
10651	**Thrust Washer** (Bronze) between Forward and Reverse Sun Gears (3-19)	20—102	1	
10652	**CENTRE SUPPORT ASSEMBLY (8-A75)**	20—103	1	
10653	**Screw,** securing Centre Support in Transmission Case (4626)	20—104	2	
9910	**Lockwasher,** on Screws (X2978DR)		2	
10654	**PLANETARY GEARS AND REAR DRUM ASSEMBLY (8-3A150)**	20—105	1	
10655	**Outer Race,** for One-Way Clutch (8-148)	20—106	1	
10656	**Snap Ring,** retaining Outer Race (4820)	20—107	1	
10657	**Thrust Washer,** between Planetary Carrier and Mainshaft (.061"/.063" thick) (5C-24)	20—108	1	**SELECTIVE SIZES. USE AS NECESSARY TO MAINTAIN CORRECT END FLOAT**
10658	**Thrust Washer,** between Planetary Carrier and Mainshaft (.067"/.069" thick) (5C-24A)	20—108	1	
10659	**Thrust Washer,** between Planetary Carrier and Mainshaft (.074"/.076" thick) (5C-24B)	20—108	1	
10660	**Thrust Washer,** between Planetary Carrier and Mainshaft (.081"/.083" thick) (5C-24C)	20—108	1	
10661	**Thrust Washer,** between Planetary Carrier and Mainshaft (.092"/.094" thick) (5C-24D)	20—108	1	
10662	**Thrust Washer,** between Planetary Carrier and Mainshaft (.105"/.107" thick) (5C-24E)	20—108	1	
10663	**ONE-WAY CLUTCH ASSEMBLY IN REAR DRUM (8-275B)**	20—109	1	

SECTION 18

AUTOMATIC TRANSMISSION UNIT

Part No.	Description	Plate No.	No. per Unit	Remarks
10664	**BRAKE BAND FOR REAR DRUM (5C-A155)**	20—110	1	
10665	**Strut** (Servo) operating Brake Band (3-156)	20—111	1	
10666	**Anchor Strut,** for Rear Brake Band (3-157)	20—112	1	
1 567	**REAR SERVO ASSEMBLY (5C-4A130)**		1	
10668	**Body Assembly,** for Rear Servo (5C-1A130)	20—113	1	
10669	**Lever,** operating Rear Servo Strut (5C-137)	20—114	1	
10670	**Shaft,** for Lever (7B-136)	20—115	1	
9902	**Roll Pin,** securing Shaft in Body (3-138)	20—116	1	
10671	**Piston,** for Rear Servo (8-131)	20—117	1	
10672	**" O " Ring,** on Piston (3-132)	20—118	1	
10673	**Return Spring,** for Rear Servo Piston (3-135)	20—119	1	
10674	**Plate,** retaining Return Spring (5-134)	20—120	1	
10675	**Snap Ring,** securing Plate (4748)	20—121	1	
10676	**Screw,** securing Rear Servo to Transmission Case (4626A)		1	
10677	**Bolt,** $\frac{7}{16}$" × 1$\frac{7}{8}$", securing Rear Servo to Transmission Case (X724)		1	
10678	**Lockwasher,** on Screw and Bolt (103322)		2	
10679	**RING GEAR, DRIVING MAINSHAFT (5-6)**	20—122	1	
10680	**MAINSHAFT ASSEMBLY (8A-A2)**	20—123	1	
10681	**Snap Ring,** retaining Mainshaft in Ring Gear (4756)	20—124	1	**SELECTIVE SIZES**
10682	**Snap Ring,** retaining Mainshaft in Ring Gear (4756A)	20—124	1	
10683	**Snap Ring,** retaining Mainshaft in Ring Gear (4756B)	20—124	1	
10684	**REAR PUMP ASSEMBLY (5L-4A160)**	20—125	1	
10685	**Plate,** retaining Rear Pump Gears (3-165C)	20—126	1	
10686	**Screw,** $\frac{1}{4}$", **and Lockwasher Assembly,** securing Plate (4789)		5	
10965	**Screw, No. 10, and Lockwasher Assembly,** securing Plate (4789A)		1	
10690	**Key,** in Mainshaft, driving Rear Pump (103905)	20—127	1	
10691	**Gasket,** between Rear Pump and Transmission Case (3-161)	20—128	1	
10692	**Oil Inlet Tube,** for Rear Pump (3-187)	20—129	1	
10693	**" O " Ring,** on Oil Inlet Tube (3-191)	20—130	1	
10694	**Oil Outlet Tube,** for Rear Pump (3-189)	20—131	1	
10695	**' O ' Ring,** on Oil Outlet Tube (3-188)	20—132	1	

AUTOMATIC TRANSMISSION UNIT

Part No.	Description	Plate No.	No. per Unit	Remarks
10696	**GOVERNOR ASSEMBLY (5G-7A95B)**	20—133	1	
10697	**Governor Body** (5G-95B)	20—134	1	
10698	**Screw**, securing Body to Sleeve (114361)		2	
8426	**Lockwasher**, on Screws (JGM.103319)		2	
10699	**Governor Weight** (5G-97A)	20—135	1	
10700	**Governor Valve** (8-96B)	20—136	1	
10701	**Spring**, for Governor (7B-99)	20—137	1	
10702	**Retainer**, holding Spring on Governor Weight (5G-98)	20—138	1	
10703	**Cover Plate**, at side of Governor Body (7B-93)	20—139	1	
10704	**Screw**, securing Cover Plate (X2380BL)		2	
9922	**Ball**, ¼" locating Governor on Mainshaft (147485)	20—140	1	
10705	**Snap Ring**, retaining Governor on Mainshaft (4752)	20—141	1	
10706	**OIL COLLECTOR SLEEVE (7B-90A)**	20—142	1	
9920	**Piston Ring**, on Mainshaft, for Oil Collector Sleeve (3-86)	20—143	4	
10708	**Oil Collector Tube**, Front (7B-92)	20—144	1	
10709	**Oil Collector Tube**, Intermediate (7B-88)	20—145	1	
10710	**Oil Collector Tube**, Rear (7B-98)	20—146	1	
C.22347	**DRIVE GEAR, FOR SPEEDOMETER (8G-169)**	20—147	1	
10711	**VALVE BODIES ASSEMBLY (8-5A200C)**	21—1	1	
10945	**Spring**, for Rear Pump Check Valve (3-228A)		1	
10946	**Spring**, for Front Servo Release Orifice Valve (5AB-223)		1	
10947	**Spring**, for 1st/2nd Shift Valve (5H-256)		1	
10948	**Return Spring**, for Throttle Cam (8G-85)		1	
10949	**Spring**, for D1/D2 Control Valve (5-113)		1	
10950	**Spring**, for Transition Valve (8-292A)		1	
10951	**Spring**, for Servo Orifice Control Valve (5-296)		2	
10952	**Leaf Spring**, for Throttle Valve Return (5-238)		1	
10953	**Spring**, Inner, for 2nd/3rd Valve (8G-223)		1	
10955	**Spring**, Outer, for 2nd/3rd Valve (5H-222)		1	
10956	**Spring**, at inner end of Throttle Modulator Valve (5-288)		1	
10957	**Spring**, at outer end of Throttle Modulator Valve (8G-215)		1	
10958	**Spring**, Inner, for Compensator (5H-214A)		1	
10959	**Spring**, Outer, for Compensator (8G-212)		1	
10960	**Throttle Spring** (3-208)		1	
10961	**Bolt**, ¼" × 2½", for Assembly of Valve Bodies (179807)		1	
8426	**Lockwasher**, on Bolts (JGM.103319)		4	
10962	**Screw, Cheese Head, and Lockwasher**, for Assembly of Valve Bodies (189384)		15	
10963	**Screw, Cheese Head, and Lockwasher**, for Assembly of Valve Bodies (189385)		2	
10964	**Screw, Cheese Head, and Lockwasher**, for Assembly of Valve Bodies (189386)		3	
10965	**Screw, Pan Head, and Lockwasher**, for Assembly of Valve Bodies (4789A)		1	
10704	**Screw**, Countersunk Head, for Assembly of Valve Bodies (X2380BL)		2	
10712	**Bolt**, securing Valve Bodies Assembly to Transmission Case (179802)		3	
8426	**Lockwasher**, on Bolts (JGM.103319)		3	
11244	**Control Rod**, operating Kick-down Cam (8K-82)	21—2	1	

SECTION 18

AUTOMATIC TRANSMISSION UNIT

Part No.	Description	Plate No.	No. per Unit	Remarks
10714	**REGULATOR ASSEMBLY (5G-3A240)**	21—3	1	
10715	**Spring,** for Primary Valve (5-247)		1	
10716	**Seat,** for Primary Valve Spring (5-248)		1	
10717	**Spring,** for Secondary Valve (5G-246)		1	
10718	**Spacer,** for Secondary Valve (5-258)		1	
10719	**Plate,** retaining Valve Springs (5-249)		1	
10720	**Screw,** $\frac{5}{16}$" × $\frac{7}{8}$", securing Regulator to Transmission Case (4626D)		2	
5908	**Lockwasher,** on Screws (JGM.103320)		2	
	OIL TUBES			
10721	**Oil Tube,** Front Brake Band Lubrication (7A-186)	21—4	1	
10722	**Oil Tube,** connecting Rear Pump to Regulator (5C-182)	21—5	1	
10723	**Oil Tube** (Compensator) connecting Valve Body to Regulator (5-183)	21—6	1	
10724	**Oil Tube** (Control Pressure) connecting Valve Body to Regulator (5-184)	21—7	1	
10725	**Oil Tube** (Apply and Release) connecting Valve Body to Front Servo (5-185)	21—8	2	
10726	**OIL FILTER ASSEMBLY (5X-A190A)**	21—9	1	
10727	**Clip,** retaining Oil Filter (5-177)	21—10	1	
C.25690	**OIL PAN ASSEMBLY (8G-A180A)**	21—11	1	
10728	**Gasket,** between Oil Pan and Transmission Case (5C-181)	21—12	1	
10729	**Bolt Assembly,** securing Oil Pan to Transmission Case (4776L)		14	
10970	**OIL SEAL AND 'O' RING KIT (8EA-500)**		1	
	consisting of:—			
	Oil Seal, Transmission Case	1		
	Oil Seal, Front Pump	1		
	Oil Seal, Speedometer Gear Housing	1		
	Sealing Ring, Rear Clutch Piston (Inner)	1		
	Sealing Ring, Rear Clutch Piston (Outer)	1		
	Sealing Ring, Front Clutch Piston (Inner)	1		
	Sealing Ring, Front Clutch Piston (Outer)	1		
	'O' Ring, Front Servo (Small)	1		
	'O' Ring, Front Servo (Large)	1		
	Sealing Ring, Front Clutch Piston Sleeve	1		
	'O' Ring, Rear Pump Inlet Tube	1		
	'O' Ring, Rear Servo	1		
	Sealing Ring, Front Pump	1		
	'O' Ring, Rear Pump Outlet Tube	1		
10971	**GASKETS KIT (8EA-501)**		1	
	consisting of:—			
	Gasket, Rear Pump	1		
	Gasket, Extension Case Cover	1		
	Gasket, Extension Case	1		
	Gasket, Oil Pan	1		
	Gasket, Speedometer Gear Housing	1		

Part No.	Description	Plate No.	No. per Unit	Remarks
10972	**PISTON RING AND METAL SEALING RING KIT (8EA-503)**		1	
	consisting of:—			
	Piston Ring, Mainshaft	4		
	Sealing Ring, Forward Sun Gear, Front	2		
	Sealing Ring, Forward Sun Gear, Centre	2		
	Sealing Ring, Forward Sun Gear, Rear	2		
10973	**THRUST WASHER KIT (8EG-504)**		1	
	consisting of:—			
	Thrust Washer, Front Clutch Hub	1		
	Thrust Washer, Input Shaft	1		
	Thrust Washer, Front Clutch Cylinder	1		
	Thrust Washer, Front Clutch Cylinder	1		
	Thrust Washer, Forward/Reverse Sun Gear	1		
	Thrust Washer, Planetary Carrier/Mainshaft	1		
	Thrust Washer, Planetary Carrier/Mainshaft	1		
	Thrust Washer, Planetary Carrier/Mainshaft	1		
	Thrust Washer, Planetary Carrier/Mainshaft	1		
	Thrust Washer, Planetary Carrier/Mainshaft	1		
	Thrust Washer, Planetary Carrier/Mainshaft	1		
10974	**FRONT CLUTCH PLATES KIT (8EA-505)**		1	
	consisting of:—			
	Pressure Plate	1		
	Drive Plate	3		
	Friction Plate	4		
	Sealing Ring, Inner	1		
	Sealing Ring, Outer	1		
10975	**REAR CLUTCH PLATES KIT**		1	
	consisting of:—			
	Pressure Plate	1		
	Drive Plate	5		
	Friction Plate	5		
	Sealing Ring, Inner	1		
	Sealing Ring, Outer	1		

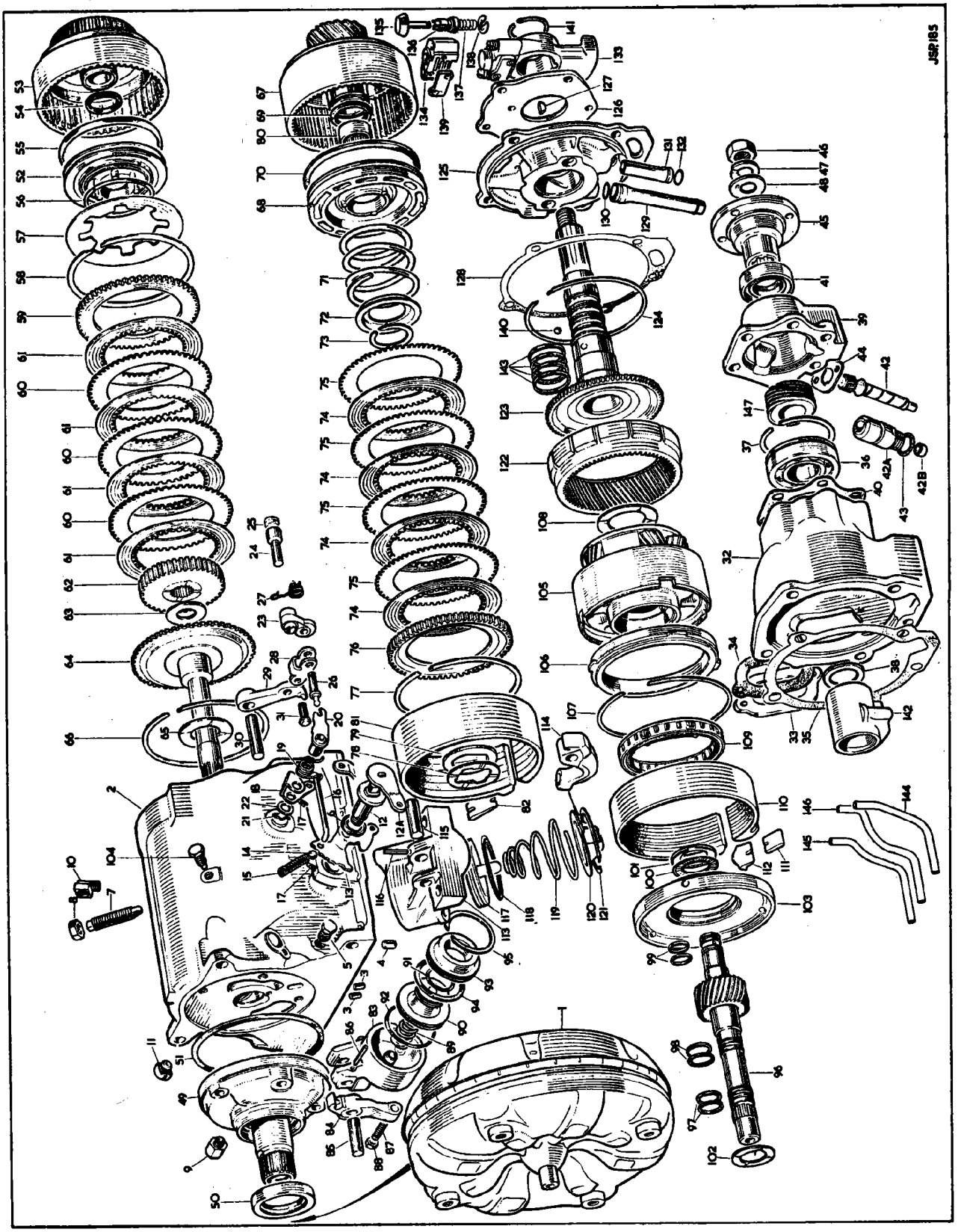

PLATE 20

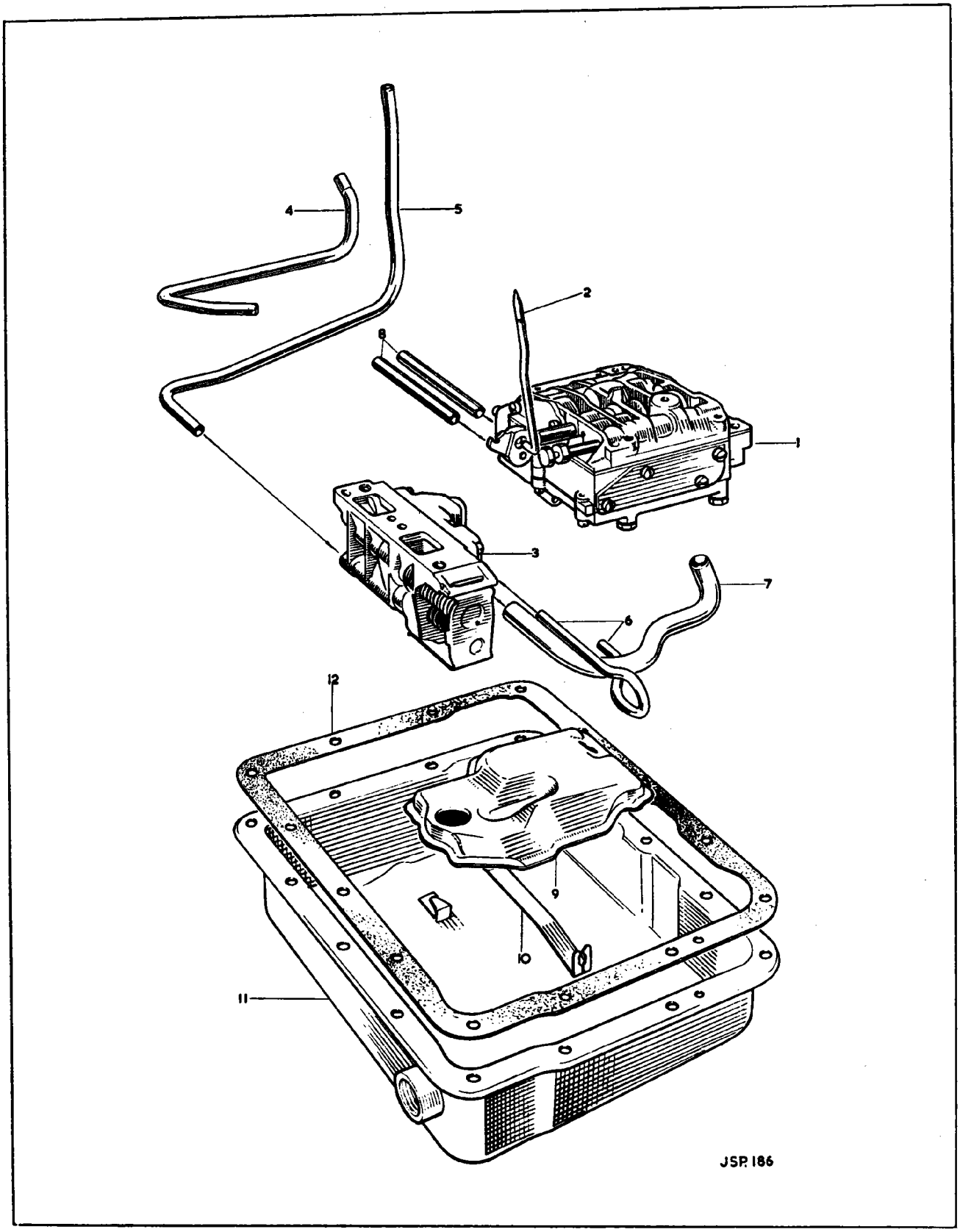

PLATE 21

MOUNTING DETAILS

AUTOMATIC TRANSMISSION

Part No.	Description	Plate No.	No. per Unit	Remarks
C.26702	**CONVERTER HOUSING**	22—1	1	
UFB.137/32R	**Bolt,** securing Convertor Housing to Cylinder Block		9	
C.726	**Washer,** Shakeproof, on Bolts		9	
C.6866	**Stud,** mounting Transmission Unit to Converter Housing	22—2	4	
UFN.143/L	**Nut,** on Studs		4	
C.727	**Washer,** Shakeproof, under Nuts		4	
C.22947	**Stoneguard Assembly,** over Apertures at sides of Converter Housing	22—3	3	
UCS.119/4R	**Screw,** Set, securing Stoneguards		4	
C.723/A	**Washer,** Shakeproof, on Setscrews		4	
AW.102/T	**Washer,** Plain, under Shakeproof Washers		4	
C.22361	**COVER AT BOTTOM OF CONVERTER HOUSING**	22—4	1	
C.6874	**COVER, AT FRONT OF CONVERTER HOUSING**	22—5	1	
UCS.125/4R	**Screw,** Set, securing Covers		8	
C.724	**Washer,** Shakeproof, on Setscrews		8	
C.4795	**R.H. SUPPORT BRACKET**	22—6	1	
C.11942	**L.H. SUPPORT BRACKET ASSEMBLY**	22—7	1	
UFB.131/10R	**Bolt,** securing Support Brackets to Cylinder Block		4	
UFN.131/L	**Nut,** on Bolts		4	
FG.105/X	**Washer,** Spring, under Nuts		4	
UFB.137/32R	**Bolt,** securing Support Brackets to Converter Housing		6	
UFN.137/L	**Nut,** on Bolts		6	
FG.106/X	**Washer,** Spring, under Nuts		6	
C.25412	**DRIVE PLATE ASSEMBLY, ON CRANKSHAFT, FOR ATTACHMENT OF TORQUE CONVERTER**	22—8	1	
C.2313	**Dowel,** locating Drive Plate on Crankshaft	22—9	2	
C.4855	**Screw,** Set, securing Drive Plate to Crankshaft	22—10	10	
C.4810	**Plate,** locking Setscrews	22—11	1	
C.16682	**Screw,** Set, securing Torque Converter to Drive Plate	22—12	4	
C.25446	**Tab Washer,** locking Setscrews	22—13	4	
C.25943	**BRACKET ASSEMBLY FOR REAR ENGINE MOUNTING**	22—14	1	
C.12335	**Spring Seat** (Rubber) inside Bracket		1	
C.12265	**Centre Bush** (Rubber)		1	
UFB.131/10R	**Bolt,** securing Mounting Bracket to Body		4	
C.12027	**Spacer,** on Bolts, between Mounting Bracket and Body	22—15	4	
FG.105/X	**Washer,** Spring, on Bolts		4	
FW.105/T	**Washer,** Plain, under Spring Washers		4	

SECTION 19

MOUNTING DETAILS

AUTOMATIC TRANSMISSION

Part No.	Description	Plate No.	No. per Unit	Remarks
C.24217	**COIL SPRING, FOR REAR ENGINE MOUNTING**	22—16	1	
C.21932	**Retainer**, at top of Coil Spring	22—17	1	
C.12335	**Spring Seat** (Rubber) inside Retainer	22—18	1	
C.19276	**Pin Assembly**, securing Retainer to Transmission Unit and locating Support Bracket	22—19	1	
C.27057	**OIL OUTLET PIPE, FROM FRONT CONNECTION ON TRANSMISSION UNIT TO FLEXIBLE HOSE**	22—20	1	
C.25971/2	**FLEXIBLE HOSE, FROM OIL OUTLET PIPE TO BOTTOM WATER PIPE (12" LONG)**	22—21	1	
C.25971/5	**FLEXIBLE HOSE, FROM BOTTOM WATER PIPE TO OIL RETURN PIPE (9" LONG)**	22—22	1	
C.2905/2	**Clip**, securing Hoses	22—23	4	
C.27058	**OIL RETURN PIPE, FROM FLEXIBLE HOSE TO REAR CONNECTION ON TRANSMISSION UNIT**	22—24	1	
C.27087	**BRACKET, ON OIL SUMP BOLT, SUPPORTING OIL PIPES AND HOSES AT FRONT**	22—25	1	
C.24549	**BRACKET, ON OIL SUMP BOLT, SUPPORTING OIL PIPES AT REAR**	22—26	1	
C.21390	**CLAMP SUPPORTING OIL PIPES**	22—27	1	
C.24599	**Clip**, holding Oil Pipes to Brackets and Clamp	22—28	3	
UFS.119/3R	**Screw**, Set, securing Clips		3	
UFN.119/L	**Nut**, on Setscrews		3	
AG.102/X	**Washer**, Spring, under Nuts		3	
C.27085	**TRANSMISSION DIPSTICK ASSEMBLY**	22—29	1	
C.27083	**TUBE ASSEMBLY, HOUSING DIPSTICK**	22—30	1	
C.27153	**Clip**, retaining Dipstick Tube	22—31	1	
C.27086	**Support Bar**, on Exhaust Manifold Stud, for Clip	22—32	1	
UFS.131/5R	**Screw**, Set, securing Clip to Support Bar		1	
FG.105/X	**Washer**, Spring, on Setscrew		1	

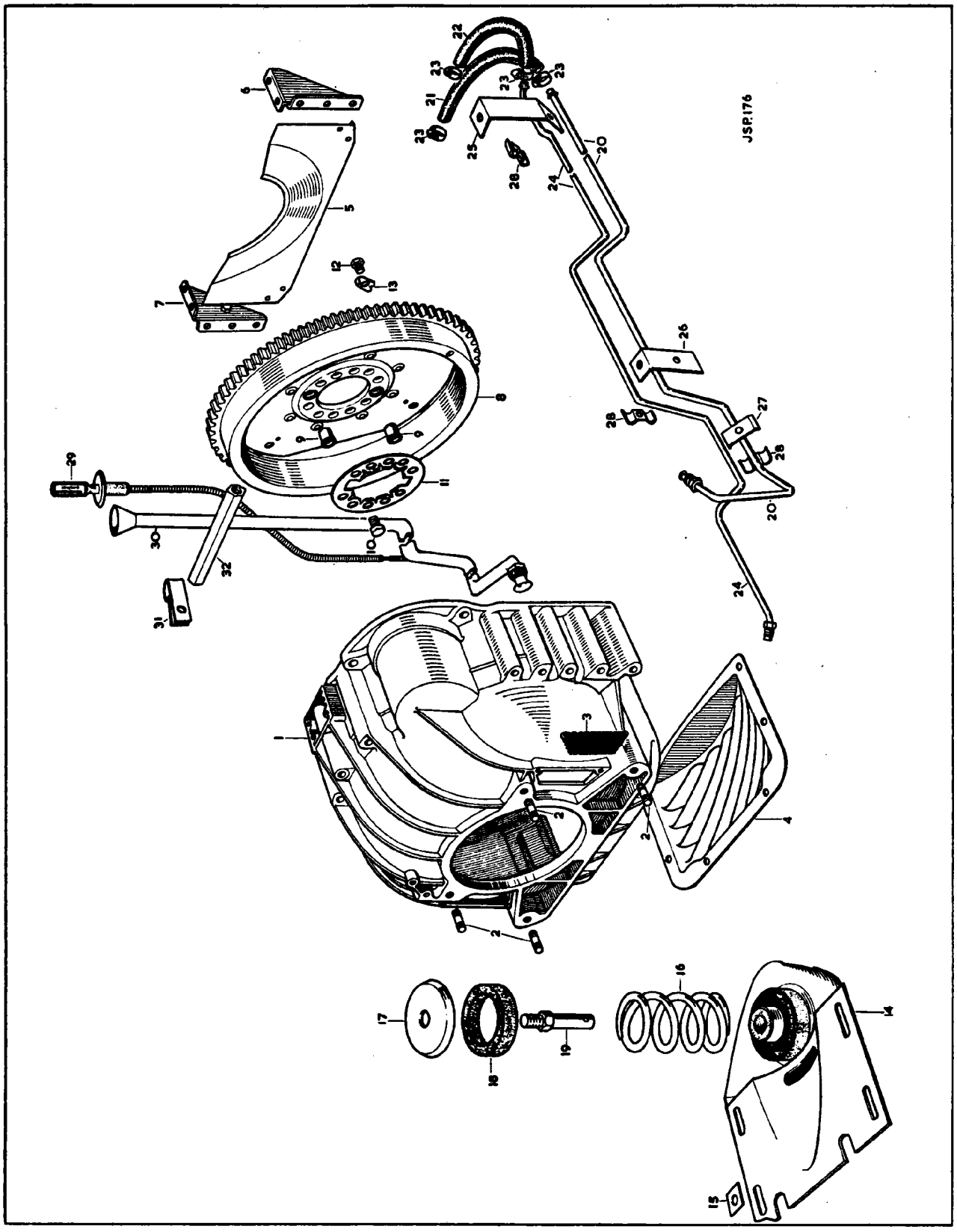

PLATE 22

AUTOMATIC TRANSMISSION CONTROL

Part No.	Description	Plate No.	No. per Unit	Remarks
C.25117	**UPPER SWITCH COVER ASSEMBLY AT CENTRE OF STEERING WHEEL (WITH INDICATOR INSCRIBED P R N D2 D1 L)**	41—1	1	
C.20792	**LOWER SWITCH COVER AT CENTRE OF STEERING WHEEL**	41—2	1	
C.16460	**Screw,** Set, clamping Upper and Lower Covers together		2	
C.15830	**Washer,** Plain, on Setscrews		2	
BD.13713/2	**Screw,** Set, securing Lower Cover to Upper Steering Column		3	
C.15830	**Washer,** Plain, on Setscrews		3	
C.26242	**HOUSING AND SHAFT ASSEMBLY FOR SELECTOR LEVER**	41—3	1	
C.15639	**Grommet,** in Selector Housing, for Indicator Arm Connecting Link	41—4	1	
C.15862	**Circlip,** securing Selector Housing and Shaft to Bracket on Steering Column	41—5	1	
C.15896	**Washer,** Special, behind Circlip	41—6	1	
C.24940	**GATE, POSITIONING SELECTOR LEVER**	41—7	1	
UFS.119/6R	**Screw,** Set, securing Gate to Mounting Bracket on Steering Column Tube		2	
UFN.119/L	**Nut,** on Setscrews		2	
C.723/A	**Washer,** Shakeproof, under Nuts		2	
C.16541	**Distance Piece,** at mounting of Gate	41—8	2	
C.27523	**LEVER ASSEMBLY OPERATING SELECTOR (COMPLETE WITH KNOB)**	41—9	1	
C.26745	**Pivot Pin,** securing Lever to Selector Housing and Shaft	41—10	1	
FW.104/T	**Washer,** Plain, on Pivot Pin		1	
L.102/4U	**Split Pin,** retaining Pivot Pin		1	
C.900	**Spring,** in Selector Housing, tensioning Lever	41—11	1	
C.903	**Shim,** under Spring	41—12	As req'd	
C.16578	**BRACKET (NYLON) FOR INDICATOR ARM**	41—13	1	
UFS.119/4R	**Screw,** Set, securing Bracket		1	
UFN.119/L	**Nut,** on Setscrew		1	
AW.102/T	**Washer,** Plain, under Nut		1	

SECTION 39

AUTOMATIC TRANSMISSION CONTROL

Part No.	Description	Plate No.	No. per Unit	Remarks
C.20734	**LINK, CONNECTING INDICATOR ARM AND SELECTOR LEVER**	41—14	1	
C.15637	**ARM ASSEMBLY FOR GEAR INDICATOR**	41—15	1	
C.15639	**Grommet,** in Indicator Arm, for Connecting Link	41—16	1	
C.26229	**LEVER ASSEMBLY, ON SELECTOR SHAFT, OPERATING GEAR CONTROL CABLE AND SWITCH**	41—17	1	R.H. DRIVE CARS ONLY
C.16637	**Locking Screw** (Square Head) securing Lever to Selector Shaft	41—18	1	R.H. DRIVE CARS ONLY
C.26230	**LEVER ASSEMBLY, ON SELECTOR SHAFT, OPERATING GEAR CONTROL CABLE**		1	L.H. DRIVE CARS ONLY
C.26232	**LEVER ASSEMBLY, ON SELECTOR SHAFT, OPERATING SWITCH**		1	L.H. DRIVE CARS ONLY
C.16637	**Locking Screw** (Square Head) securing Levers to Selector Shaft		2	L.H. DRIVE CARS ONLY
C.22717	**LINK, CONNECTING LEVER TO SWITCH FOR REVERSE LAMP AND STARTER CUT-OUT**	41—19	1	
C.15639	**Grommet,** for Connecting Link	41—20	2	
C.23291	**SWITCH, FOR REVERSE LAMP AND STARTER CUT-OUT**	41—21	1	
C.26235	**Half Clip** (Upper) holding Switch	41—22	1	
C.26236	**Half Clip** (Lower) holding Switch	41—23	1	
UFS.119/7R	**Screw,** Set, securing Clips to Steering Column		1	
UFS.119/12R	**Screw,** Set, securing Switch in Clips		1	
C.723/A	**Washer,** Shakeproof, on Setscrews		2	
C.22712	**TRANSFER LEVER ASSEMBLY FOR OPERATION OF GEAR CONTROL CABLE**	41—24	1	R.H. DRIVE CARS ONLY
C.22715	**Bracket,** mounting Transfer Lever to Dash	41—25	1	R.H. DRIVE CARS ONLY
C.22716	**Nut Plate Assembly,** fixing Bracket	41—26	1	R.H. DRIVE CARS ONLY
UFS.131/6R	**Screw,** Set, securing Bracket to Dash		2	R.H. DRIVE CARS ONLY
FG.105/X	**Washer,** Spring, on Setscrews		2	R.H. DRIVE CARS ONLY
FW.105/T	**Washer,** Plain, under Spring Washers		2	R.H. DRIVE CARS ONLY

AUTOMATIC TRANSMISSION CONTROL

Part No.	Description	Plate No.	No. per Unit	Remarks
C.26239	**TRANSFER LEVER ASSEMBLY FOR OPERATION OF GEAR CONTROL CABLE**		1	L.H. DRIVE CARS ONLY
C.26243	**Bracket,** mounting Transfer Lever to Dash		1	
C.22716	**Nut Plate Assembly,** fixing Bracket		1	
UFS.131/6R	**Screw,** Set, securing Bracket to Dash		1	
FG.105/X	**Washer,** Spring, on Setscrews		1	
UFB.131/11R	**Bolt,** through Bracket, pivoting Transfer Lever		1	
C.15814	**Distance Tube,** on Bolt		1	
UFN.131/L	**Nut,** on Bolt		1	
FG.105/X	**Washer,** Spring, on Bolt		1	
C.15829	**Washer,** Plain, under Spring Washer		1	
C.16810	**LINK, CONNECTING LEVER ON SELECTOR SHAFT TO TRANSFER LEVER**	41—27	1	R.H. DRIVE CARS ONLY
C.16809	**Ball Joint** (Amal) connecting Link to operating Lever and Transfer Lever	41—28	2	
UFN.125/L	**Nut,** locking Ball Joints to Link		2	
C.27584	**LINK, CONNECTING LEVER ON SELECTOR SHAFT TO TRANSFER LEVER**		1	L.H. DRIVE CARS ONLY
C.16809	**Ball Joint** (Amal) connecting Link to Operating Lever		1	
C.25152	**End Fitting,** securing Link to Transfer Lever		1	
UFN.125/L	**Nut,** locking Ball Joint and End Fitting to Link		2	
C.26249	**GEAR CONTROL CABLE FROM TRANSFER LEVER TO TRANSMISSION UNIT**	41—29	1	R.H. DRIVE CARS ONLY
C.26250	**GEAR CONTROL CABLE FROM TRANSFER LEVER TO TRANSMISSION UNIT**		1	L.H. DRIVE CARS ONLY
C.16809	**Ball Joint** (Amal) connecting Cable to Transfer Lever	41—30	1	
UFN.125/L	**Nut,** locking Ball Joint to Cable		1	
C.26238	**ABUTMENT PLATE, ON DASH, LOCATING GEAR CONTROL CABLE**	41—31	1	
UFS.125/6R	**Screw,** Set, securing Abutment Plate to Dash		1	
C.724	**Washer,** Shakeproof, on Setscrew		1	
FW.104/T	**Washer,** Plain, under Shakeproof Washer		1	
C.12690	**Nut,** locking Gear Control Cable to Abutment Plate	41—32	2	

SECTION 39

AUTOMATIC TRANSMISSION CONTROL

Part No.	Description	Plate No.	No. per Unit	Remarks
C.26233	**ABUTMENT BRACKET ASSEMBLY ON CONVERTER HOUSING**	41—33	1	
UFS.131/6R	**Screw,** Set, securing Abutment Bracket to Converter Housing		2	
C.725	**Washer,** Shakeproof, on Setscrews		2	
UFS.131/7R	**Screw,** Set, securing Cable to Abutment Bracket		1	
C.725	**Washer,** Shakeproof, on Setscrew		1	
C.12425	**Grommet,** in Transmission Tunnel, for Gear Control Cable (745475)	41—34	1	
C.25157	**END FITTING, SECURING GEAR CONTROL CABLE TO LEVER ON TRANSMISSION UNIT**	41—35	1	
UFN.125/L	**Nut,** locking End Fitting on Gear Control Cable		1	
UFN.125/L	**Nut,** securing End Fitting to Control Lever		1	
C.724	**Washer,** Shakeproof, under Nut		1	

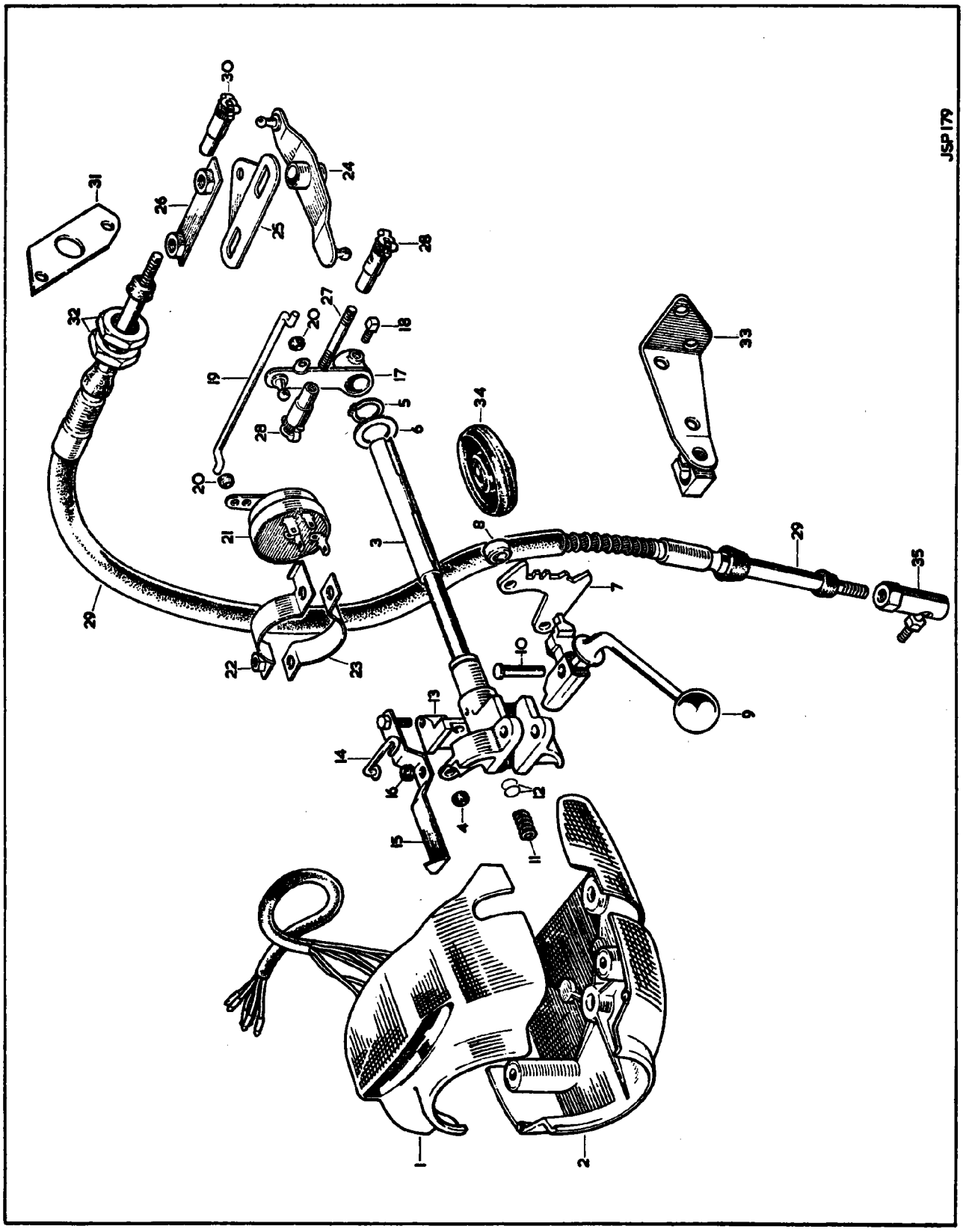
JSP179
1
2
3
4
5
6
7
8
9
10
11
12
13
14
15
16
17
18
19
20
21
22
23
24
25
26
27
28
29
30
31
32
33
34
35

PLATE 41

SECTION 20

PROPELLER SHAFT

Part No.	Description	Plate No.	No. per Unit	Remarks
C.26578	**PROPELLER SHAFT, COMPLETE**		1	**ALTERNATIVE TO C.23044**
8404	**Flange Yoke** (K.2-2-329/C)	23—1	2	
9409	**Journal Assembly,** connecting Flange Yokes to Propeller Shaft (K.5-GB.162)	23—2	2	
9410	**Sleeve Yoke Assembly** (K.2-3-GB.3758)	23—3	1	
9411	**Gaiter,** for Sliding Joint (94-GB.4007)	23—4	1	
9412	**Ring** (Rubber) retaining Gaiter to Shaft (K.3-86-GB.139)	23—5	2	
9413	**Ring** (Steel) retaining Gaiter to Sleeve Yoke (94-GB.3951)	23—6	1	
9409	**JOURNAL ASSEMBLY, CONNECTING FLANGE YOKES TO PROPELLER SHAFT (K.5-GB.162)**	23—2	2	
19	**Circlip,** retaining Journal Bearings (K.2-7-GB.19)	23—7	8	
C.19827	**Bolt,** securing Propeller Shaft to Flanges on Transmission and Final Drive Unit	23—8	8	
C.8737/3	**Nut,** Self-Locking, on Bolts	23—9	8	

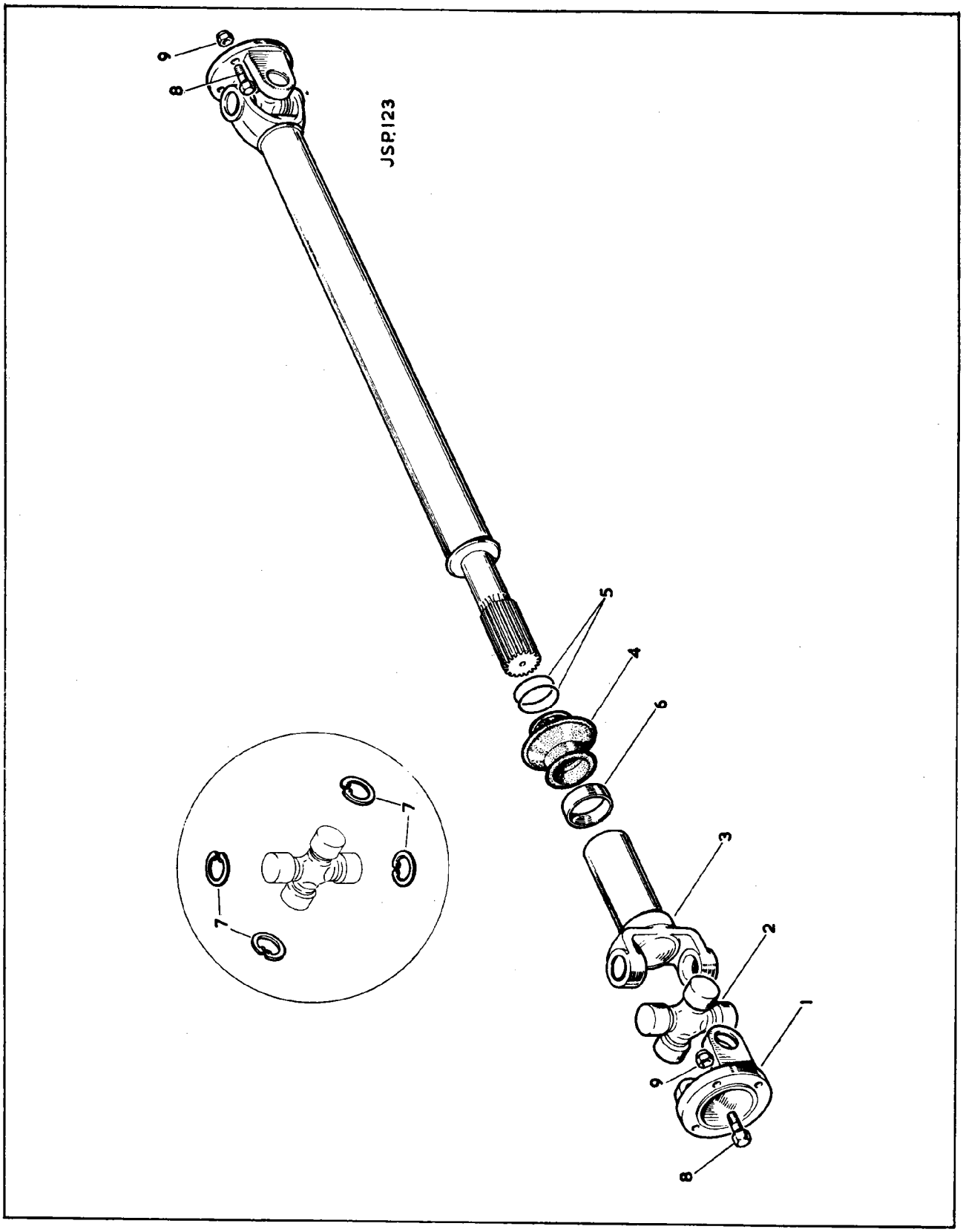

PLATE 23

SECTION 21

PROPELLER SHAFT

Part No.	Description	Plate No.	No. per Unit	Remarks
C.23044	**PROPELLER SHAFT, COMPLETE**		1	**ALTERNATIVE TO C.26578**
10064	**Flange Yoke** (04/202007)	24—1	2	
10065	**Journal Assembly**, connecting Flange Yokes to Propeller Shaft (04/500068)	24—2	2	
10070	**Sleeve Yoke** (04/501189)	24—3	1	
1007	**Clip**, retaining Gaiter to Sleeve Yoke (04/245640)	24—4	1	
10065	**JOURNAL ASSEMBLY, CONNECTING YOKES TO PROPELLER SHAFT (04/500068)**	24—2	2	
19	**Circlip**, retaining Journal Bearings (K.2-7-GB.19)	24—5	8	
C.19827	**Bolt**, securing Propeller Shaft to Flanges on Transmission and Final Drive Unit	24—6	8	
C.8737/3	**Nut**, Self-Locking, on Bolts	24—7	8	

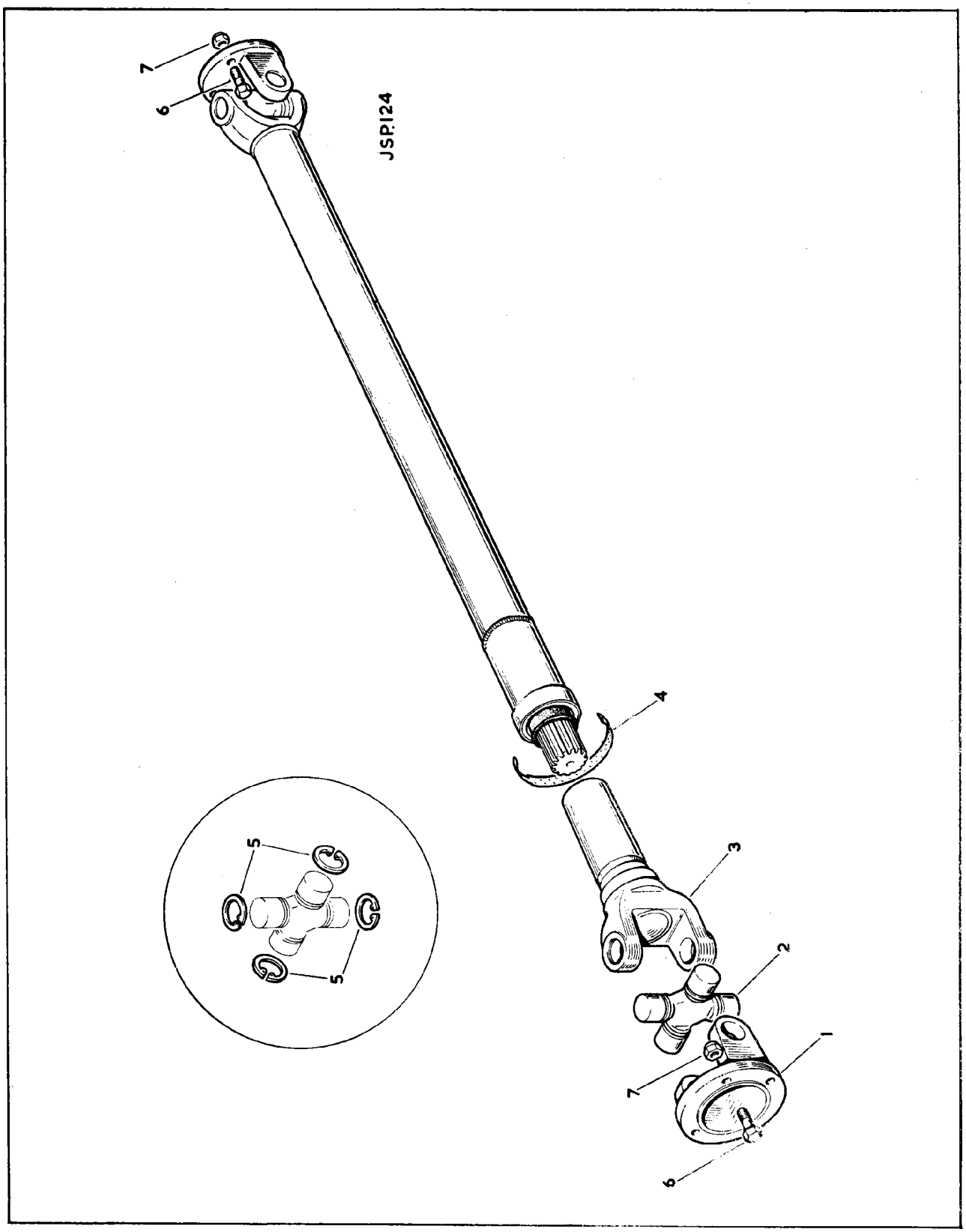

PLATE 24

FINAL DRIVE UNIT

STANDARD OR AUTOMATIC TRANSMISSION

Part No.	Description	Plate No.	No. per Unit	Remarks
C.25840	**FINAL DRIVE UNIT ASSEMBLY (4HU-001/35) (RATIO 3.31 : 1)**		1	
9752	**Gear Carrier Sub-Assembly** (4HU-061/12)	25—1	1	
6114	**Screw,** Set, securing Differential Bearing Caps (8B-NC.36)	25—2	4	
8489	**Lockwasher,** on Setscrews (8LW-115)	25—3	4	
8507	**Cover,** for Carrier (4HA-010/9)	25—4	1	
3823	**Plug,** for Filler and Drain Apertures (HA-059)	25—5	2	
3931	**Gasket,** under Cover (4HA-026)	25—6	1	
8509	**Elbow,** in Cover (4HA-098/1)	25—7	1	
CS.131/5D	**Screw,** Set, securing Cover to Carrier (5B-NC.10)	25—9	10	
47	**Lockwasher,** on Setscrews (5LW-95)	25—10	10	
8488	**Differential Case Assembly** (4HU-082/10)		1	
3845	**Roller Bearing,** on Differential Case (Timken 25577-25523) (2HA-024)	25—11	2	
6304	**Crown Wheel and Pinion** (Ratio 3.31 : 1) (4HA-105/8A)	25—12	1	
6301	**Screw,** Set, securing Crown Wheel to Differential Case (3HA-075/6)	25—13	10	
7384	**Lock Strap,** securing Crown Wheel Setscrews (4HA-074/4)	25—14	5	
3844	**Roller Bearing,** at inner end of Pinion (Timken 31593-31520) (2HA-023)	25—15	1	
3860	**Shim,** inner, adjusting Pinion (.003" thick) (2HA-043)	25—16	As req'd	**SELECTIVE SIZES**
3861	**Shim,** inner, adjusting Pinion (.005" thick) (2HA-044)	25—16	As req'd	
3862	**Shim,** inner, adjusting Pinion (.010" thick) (2HA-045)	25—16	As req'd	
8029	**Distance Washer,** behind Outer Pinion Shims (4HA-115)	25—17	1	
3856	**Shim,** outer, adjusting Pinion (.003" thick) (2HA-039)	25—18	As req'd	**SELECTIVE SIZES**
3857	**Shim,** outer, adjusting Pinion (.005" thick) (2HA-040)	25—18	As req'd	
3858	**Shim,** outer, adjusting Pinion (.010" thick) (2HA-041)	25—18	As req'd	
3859	**Shim,** outer, adjusting Pinion (.030" thick) (2HA-042)	25—18	As req'd	
3843	**Roller Bearing,** at outer end of Pinion (Timken 02872-02820) (2HA-022)	25—19	1	
3934	**Oil Slinger,** on Pinion (4HA-036)	25—20	1	
3840	**Oil Seal,** on Pinion (2HA-019)	25—21	1	
3841	**Gasket,** for Pinion Oil Seal (2HA-020)	25—22	1	
11098	**Companion Flange** (4HA-102/12)	25—23	1	
11099	**Nut,** securing Companion Flange to Pinion (12LN-NF.9B)	25—24	1	
6128	**Washer,** under Nut (12W-24)	25—25	1	
11100	**Drive Shaft and Flange** (4HU-005/8)	25—26	2	
11101	**Roller Bearing,** on Drive Shafts (4HU-025/1)	25—27	4	
11102	**Spacing Collar,** between Roller Bearings (4HU-018/2)	25—28	2	
11103	**Shim,** adjusting Bearings (.003" thick) (4HU-116/3)	25—29	As req'd	**SELECTIVE SIZES**
11104	**Shim,** adjusting Bearings (.005" thick) (4HU-116/4)	25—29	As req'd	
11105	**Shim,** adjusting Bearings (.010" thick) (4HU-116/5)	25—29	As req'd	
11106	**Housing,** for Drive Shaft Bearings (4HU-014/5)	25—30	2	
8950	**'O' Ring,** on Housings (4HA-079/2)	25—31	2	
11107	**Nut,** securing Drive Shafts in Bearings (4HU-089/2)	25—32	2	
11108	**Tab Washer,** locking Nuts (4HU-091/2)	25—33	2	
9754	**Shim,** under Bearing Housings, for adjustment of Differential (.003" thick) (4HU-050/7)	25—34	As req'd	**SELECTIVE SIZES**
9755	**Shim,** under Bearing Housings, for adjustment of Differential (.005" thick) (4HU-051/7)	25—34	As req'd	
9756	**Shim,** under Bearing Housings, for adjustment of Differential (.010" thick) (4HU-052/7)	25—34	As req'd	
9757	**Shim,** under Bearing Housings, for adjustment of Differential (.030" thick) (4HU-053/7)	25—34	As req'd	
8505	**Bolt,** securing Bearing Housings to Gear Carrier (7B-NC.24)	25—35	4	
9758	**Bolt,** securing Bearing Housings and Adaptor Plates to Gear Carrier (7B-NC.28)	25—36	6	
8506	**Lockwasher,** on Bolts (7LW-13)	25—37	10	
8436/A	**Oil Seal,** in Bearing Housings, for Driving Flange (4HA-079/4)	25—38	2	
8510	**Bolt,** in Flanges, for attachment of Brake Discs and Half Shafts (4HU-055/4)	25—39	8	
C.15349	**Nut,** Self-Locking, on Bolts (7LN-NF.75)	25—40	8	
C.17024	**Bolt,** securing Final Drive Unit to Rear Suspension Cross Member		4	
C.837	**Wire,** locking Bolts		As req'd	
C.25716	**Breather,** for Final Drive Unit	25—41	1	

SECTION 22

FINAL DRIVE UNIT

STANDARD OR AUTOMATIC TRANSMISSION

Part No.	Description	Plate No.	No. per Unit	Remarks
8488	**DIFFERENTIAL CASE ASSEMBLY (4HU-082/10)**		1	
7887	**Case only,** for Differential (4HA-006/9)	25—42	2 halves	
7683	**Friction Plate** (flat) (4HA-111/3)	25—43	4	
8397	**Friction Plate** (dished) (4HA-111/4)	25—44	2	
7684	**Friction Disc** (4HA-112)	25—45	4	
7682	**Ring,** for Side Gears (4HA-109/1)	25—46	2	
7681	**Side Gear** (4HA-007/1)	25—47	2	
7685	**Pinion Mate Gear** (4HA-008)	25—48	4	
7686	**Shaft,** for Pinion Mate Gears (4HA-012/1)	25—49	2 halves	
7680	**Bolt,** securing Differential Casing (6B-NC.44)	25—50	8	

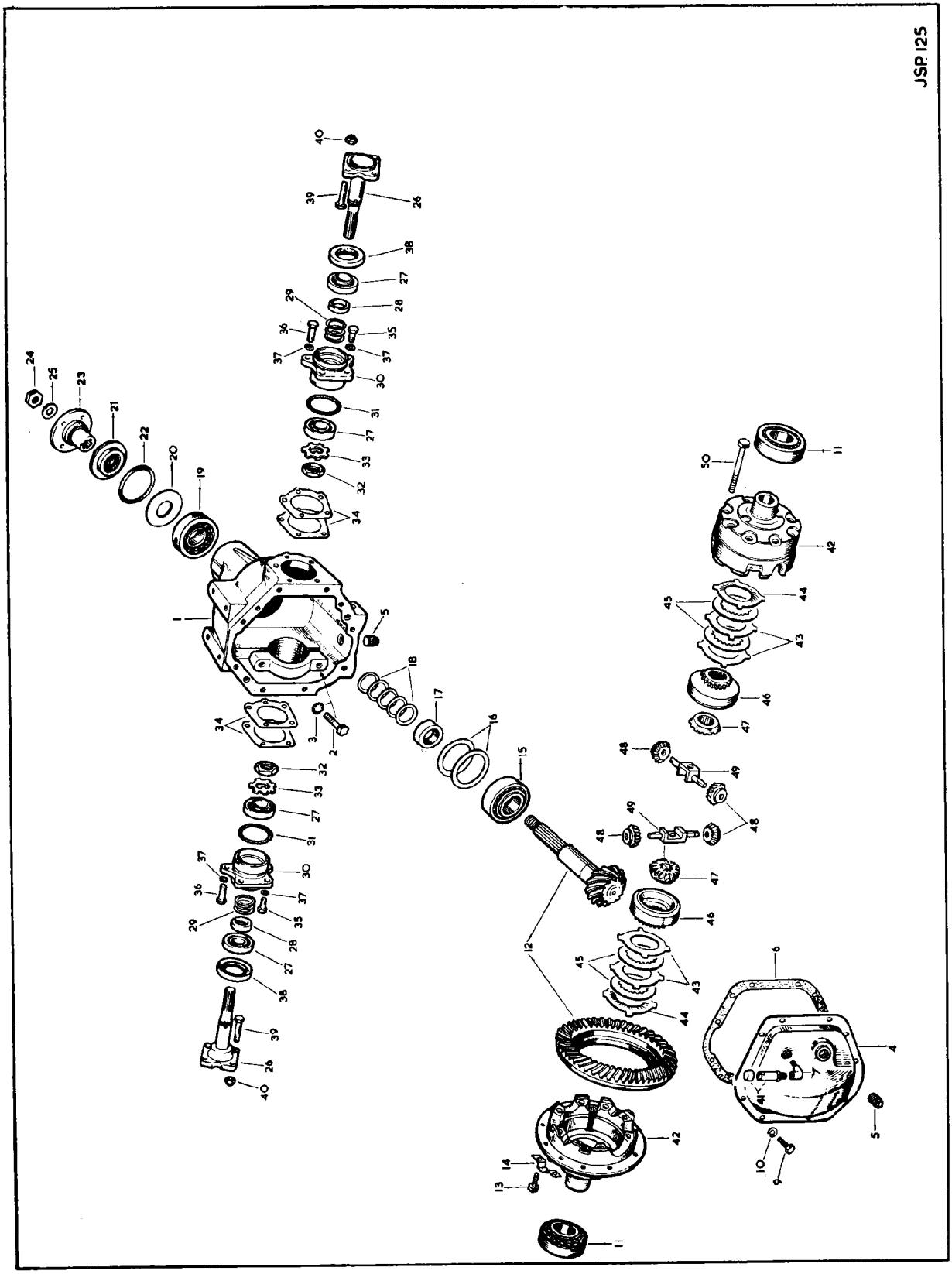

PLATE 25

Part No.	Description	Plate No.	No. per Unit	Remarks
C.25842	**FINAL DRIVE UNIT ASSEMBLY (4HU-001/35B) (RATIO 3.77 : 1)**		1	
9752	**Gear Carrier Sub-Assembly** (4HU-061/12)	26—1	1	
6114	**Screw,** Set, securing Differential Bearing Caps (8B-NC.36)	26—2	4	
8489	**Lockwasher,** on Setscrews (8LW-115)	26—3	4	
8507	**Cover,** for Carrier (4HA-010/9)	26—4	1	
3823	**Plug,** for Filler and Drain Apertures (HA-059)	26—5	2	
3931	**Gasket,** under Cover (4HA-026)	26—6	1	
8509	**Elbow,** in Cover (4HA-098/1)	26—7	1	
CS.131/5D	**Screw,** Set, securing Cover to Carrier (5B-NC.10)	26—9	10	
47	**Lockwasher,** on Setscrews (5LW-95)	26—10	10	
9208	**Differential Case Assembly** (4HU-082/11)		1	
3845	**Roller Bearing,** on Differential Case (Timken 25577-25523) (2HA-024)	26—11	2	
6306	**Crown Wheel and Pinion** (Ratio 3.77 : 1) (4HA-105/7A)	26—12	1	
6301	**Screw,** Set, securing Crown Wheel to Differential Case (3HA-075/6)	26—13	10	
7384	**Lock Strap,** securing Crown Wheel Setscrews (4HA-074/4)	26—14	5	
3844	**Roller Bearing,** at inner end of Pinion (Timken 31593-31520) (2HA-023)	26—15	1	
3860	**Shim,** inner, adjusting Pinion (.003" thick) (2HA-043)	26—16	As req'd	**SELECTIVE SIZES**
3861	**Shim,** inner, adjusting Pinion (.005" thick) (2HA-044)	26—16	As req'd	
3862	**Shim,** inner, adjusting Pinion (.010" thick) (2HA-045)	26—16	As req'd	
8029	**Distance Washer,** behind Outer Pinion Shims (4HA-115)	26—17	1	
3856	**Shim,** outer, adjusting Pinion (.003" thick) (2HA-039)	26—18	As req'd	**SELECTIVE SIZES**
3857	**Shim,** outer, adjusting Pinion (.005" thick) (2HA-040)	26—18	As req'd	
3858	**Shim,** outer, adjusting Pinion (.010" thick) (2HA-041)	26—18	As req'd	
3859	**Shim,** outer, adjusting Pinion (.030" thick) (2HA-042)	26—18	As req'd	
3843	**Roller Bearing,** at outer end of Pinion (Timken 02872-02820) (2HA-022)	26—19	1	
3934	**Oil Slinger,** on Pinion (4HA-036)	26—20	1	
3840	**Oil Seal,** on Pinion (2HA-019)	26—21	1	
3841	**Gasket,** for Pinion Oil Seal (2HA-020)	26—22	1	
11098	**Companion Flange** (4HA-102/12)	26—23	1	
11099	**Nut,** securing Companion Flange to Pinion (12LN-NF.9B)	26—24	1	
6128	**Washer,** under Nut (12W-24)	26—25	1	
11100	**Drive Shaft and Flange** (4HU-005/8)	26—26	2	
11101	**Roller Bearing,** on Drive Shafts (4HU-025/1)	26—27	4	
11102	**Spacing Collar,** between Roller Bearings (4HU-018/2)	26—28	2	
11103	**Shim,** adjusting Bearings (.003" thick) (4HU-116/3)	26—29	As req'd	**SELECTIVE SIZES**
11104	**Shim,** adjusting Bearings (.005" thick) (4HU-116/4)	26—29	As req'd	
11105	**Shim,** adjusting Bearings (.010" thick) (4HU-116/5)	26—29	As req'd	
11106	**Housing,** for Drive Shaft Bearings (4HU-014/5)	26—30	2	
8950	**'O' Ring,** on Housing (4HA-079/2)	26—31	2	
11107	**Nut,** securing Drive Shaft in Bearings (4HU-089/2)	26—32	2	
11108	**Tab Washer,** locking Nuts (4HU-091/2)	26—33	2	
9754	**Shim,** under Bearing Housings, for adjustment of Differential (.003" thick) (4HU-050/7)	26—34	As req'd	**SELECTIVE SIZES**
9755	**Shim,** under Bearing Housings, for adjustment of Differential (.005" thick) (4HU-051/7)	26—34	As req'd	
9756	**Shim,** under Bearing Housings, for adjustment of Differential (.010" thick) (4HU-052/7)	26—34	As req'd	
9757	**Shim,** under Bearing Housings, for adjustment of Differential (.030" thick) (4HU-053/7)	26—34	As req'd	
8505	**Bolt,** securing Bearing Housings to Gear Carrier (7B-NC.24)	26—35	4	
9758	**Bolt,** securing Bearing Housings and Adaptor Plates to Gear Carrier (7B-NC.28)	26—36	3	
8506	**Lockwasher,** on Bolts (7LW-13)	26—37	10	
8436/A	**Oil Seal,** in Bearing Housings, for Driving Flange (4HA-079/4)	26—38	2	
8510	**Bolt,** in Flanges, for attachment of Brake Discs and Half-Shafts (4HU-055/4)	26—39	8	
C.15349	**Nut,** Self-Locking, on Bolts (7LN-NF.75)	26—40	8	
C.17024	**Bolt,** securing Final Drive Unit to Rear Suspension Cross Member		4	
C.837	**Wire,** locking Bolts		As req'd	
C.25716	**Breather,** for Final Drive Unit	26—41	1	

SECTION 23

FINAL DRIVE UNIT

OVERDRIVE TRANSMISSION

Part No.	Description	Plate No.	No. per Unit	Remarks
9208	**DIFFERENTIAL CASE ASSEMBLY (4HU-082/11)**		1	
7888	**Case only,** for Differential (4HA-006/10)	26—42	2 halves	
7683	**Friction Plate** (flat) (4HA-111/3)	26—43	4	
8397	**Friction Plate** (dished) (4HA-111/4)	26—44	2	
7684	**Friction Disc** (4HA-112)	26—45	4	
7682	**Ring,** for Side Gears (4HA-109/1)	26—46	2	
7681	**Side Gear** (4HA-007/1)	26—47	2	
7685	**Pinion Mate Gear** (4HA-008)	26—48	4	
7686	**Shaft,** for Pinion Mate Gears (4HA-012/1)	26—49	2 halves	
7680	**Bolt,** securing Differential Casing (6B-NC.44)	26—50	8	

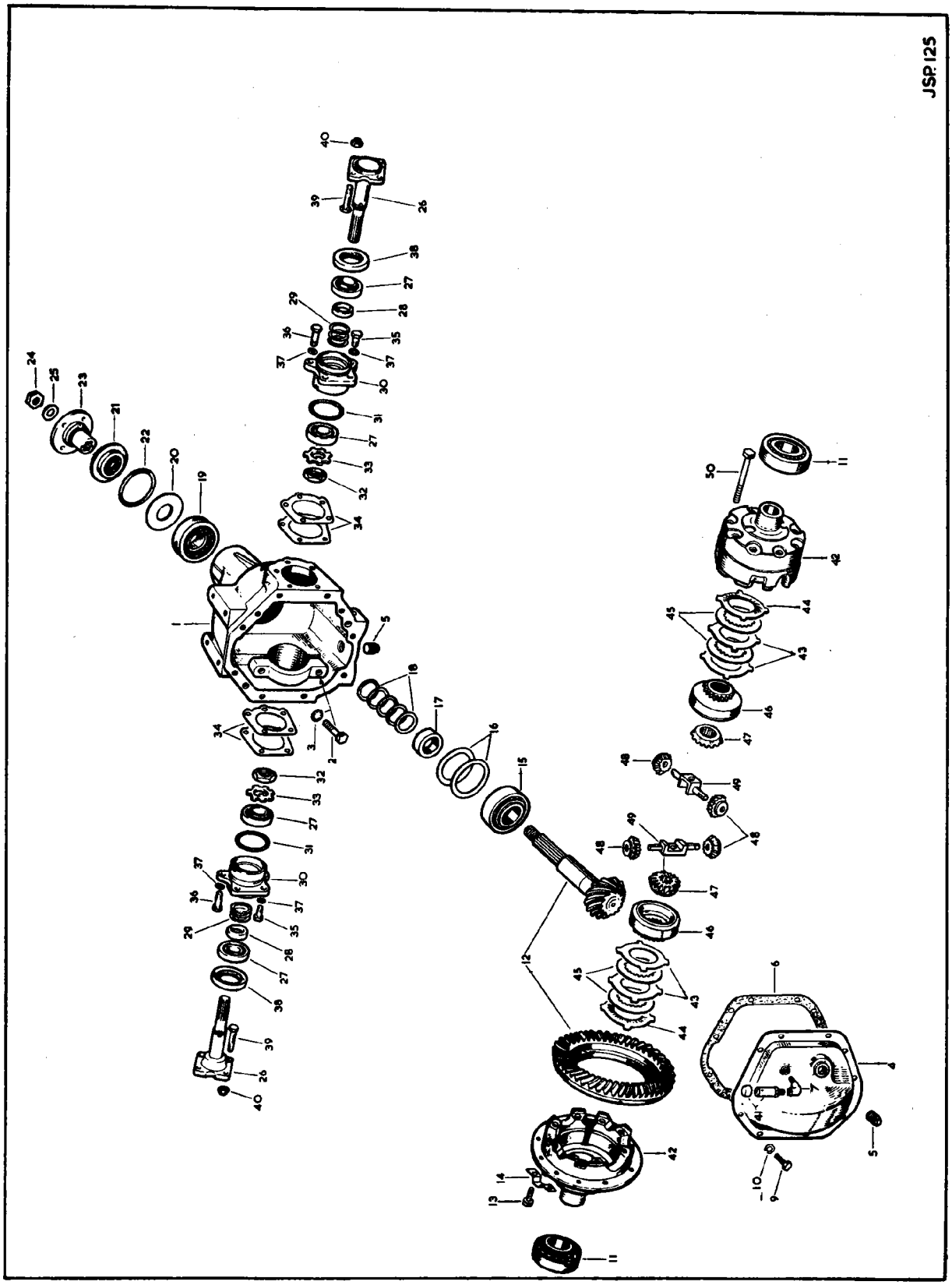

PLATE 26

FRONT SUSPENSION

Part No.	Description	Plate No.	No. per Unit	Remarks
C.26975	**FRONT SUSPENSION ASSEMBLY, R.H.**		1	FOR USE WHEN DISC ROAD WHEELS ARE FITTED
C.26976	**FRONT SUSPENSION ASSEMBLY, L.H.**		1	
C.26977	**FRONT SUSPENSION ASSEMBLY, R.H.**		1	FOR USE WHEN WIRE SPOKE WHEELS ARE FITTED
C.26978	**FRONT SUSPENSION ASSEMBLY, L.H.**	27—1	1	
C.15353	**FRONT SUSPENSION CROSS MEMBER ASSEMBLY**	27—2	1	NOT REQUIRED WHEN POWER ASSISTED STEERING IS FITTED
11293	**Tapped Plate**, receiving Fixing Bolts for Upper Wishbone Fulcrum Shafts		4	
11292	**Screw**, Set, securing Tapped Plates		4	
C.26599	**FRONT SUSPENSION CROSS MEMBER ASSEMBLY**		1	FOR R.H. DRIVE CARS EQUIPPED WITH POWER-ASSISTED STEERING
11293	**Tapped Plate**, receiving Fixing Bolts for Upper Wishbone Fulcrum Shafts		4	
11292	**Screw**, Set, securing Tapped Plates		4	
C.26600	**FRONT SUSPENSION CROSS MEMBER ASSEMBLY**		1	FOR L.H. DRIVE CARS EQUIPPED WITH POWER-ASSISTED STEERING
11293	**Tapped Plate**, receiving Fixing Bolts for Upper Wishbone Fulcrum Shafts		4	
11292	**Screw**, Set, securing Tapped Plates		4	
BD.10341	**Plug** (Rubber) sealing Tooling Holes in top of Front Suspension Cross Member	27—3	2	
C.23549	**MOUNTING (RUBBER) AT FRONT OF SUSPENSION CROSS MEMBER**	27—4	2	
C.8737/4	**Nut**, Self-locking, securing Front Mounting to Cross Member		2	
C.3337	**Washer**, Special, under Nuts		2	
UFS.137/7R	**Screw**, Set, securing Front Mountings to Body		4	
C.8737/3	**Nut**, Self-locking, on Setscrews		4	
FW.106/T	**Washer**, Plain, under Nuts		4	
C.23421	**BUMP STOP (RUBBER) ON TURRET OF FRONT SUSPENSION CROSS MEMBER**	27—5	2	
UFS.131/6R	**Screw**, Set, securing Bump Stops		4	
C.8667/2	**Nut**, Self-locking, on Setscrews		4	

SECTION 24

FRONT SUSPENSION

Part No.	Description	Plate No.	No. per Unit	Remarks
C.9004	**MOUNTING (RUBBER) AT REAR OF FRONT SUSPENSION CROSS MEMBER**	27—6	2	
C.8737/3	**Nut,** Self-locking, securing Rear Mountings to Cross Member		4	
FW.106/T	**Washer,** Plain, under Nuts		4	
UFB.137/26R	**Bolt,** securing Rear Mountings to Body		2	
C.8737/3	**Nut,** Self-locking on Bolts		2	
C.24568	**UPPER WISHBONE ASSEMBLY, L.H.**	27—7	1	
C.17177	**Upper Wishbone Lever,** L.H. Front	27—8	1	
C.17176	**Upper Wishbone Lever,** L.H. Rear	27—9	1	
C.15319	**Fulcrum Shaft,** mounting Upper Wishbone Levers	27—10	1	
C.8675	**Distance Washer,** on Fulcrum Shaft	27—11	1	
C.8672	**Bush** (Rubber) on Fulcrum Shaft	27—12	2	
NN.750/L	**Slotted Nut,** securing Upper Wishbone Levers to Fulcrum Shaft	27—13	2	
C.8676	**Washer,** Special, under Slotted Nuts	27—14	2	
L.104/10[illegible]	**Split Pin,** retaining Slotted Nuts	27—15	2	
C.23024	**Ball Joint Assembly,** for Upper Wishbone Levers	27—16	1	
C.4740	**Distance Piece,** between Ball Joints and inner face of Upper Wishbone Levers	27—17	1	
C.15308	**Shim,** for adjustment of Castor Angle	27—18	5	
C.15903	**Bolt** (Short) securing Ball Joint to Upper Wishbone Levers		1	
C.17171	**Bolt** (long) securing Ball Joint to Upper Wishbone Levers		1	
C.8667/3	**Nut,** Self-locking on Bolts		2	
FW.106/T	**Washer,** Plain, under Nuts		2	
C.17172	**Rebound Stop** (Rubber) on Upper Wishbone Levers	27—19	1	
C.17170	**Bolt,** securing Rebound Stop		2	
FG.106/X	**Washer,** Spring, on Bolts		2	
C.24567	**UPPER WISHBONE ASSEMBLY, R.H.**		1	
C.17176	**Upper Wishbone Lever,** R.H. Front		1	
C.17177	**Upper Wishbone Lever,** R.H. Rear		1	
	All other items are as for L.H. Upper Wishbone Assembly C.24568			
C.8918/1	**SHIM, FOR ADJUSTMENT OF CAMBER ANGLE (.064" THICK)**	27—20	As req'd	**SELECTIVE SIZES**
C.8918/2	**SHIM, FOR ADJUSTMENT OF CAMBER ANGLE (.048" THICK)**	27—20	As req'd	
C.8918/3	**SHIM, FOR ADJUSTMENT OF CAMBER ANGLE (.036" THICK)**	27—20	As req'd	
C.17078	**Bolt** (Short) securing Upper Fulcrum Shaft to Front Suspension Cross Member at top	27—21	4	
C.17079	**Bolt** (Long) securing Upper Fulcrum Shaft to Front Suspension Cross Member at bottom	27—22	4	
FG.106/X	**Washer,** Spring, on Bolts		8	

Part No.	Description	Plate No.	No. per Unit	Remarks
C.23024	**BALL JOINT ASSEMBLY FOR UPPER WISHBONE LEVERS**	27—16	2	
C.22967	**Gaiter** (Rubber) at bottom of Ball Joints		2	
C.22970	**Insert,** between Ball Joint Assembly and Gaiter		2	
C.22969	**Ring,** securing Gaiters to Ball Joints		2	
C.9048	**Grease Nipple,** at top of Ball Joints (Tecalemit NA.6626)		2	
C.22971	**Washer** (Nylon) under Grease Nipples		2	
C.8737/5	**Nut,** Self-locking, securing Ball Joints to Stub Axle Carriers		2	
FW.108/T	**Washer,** Plain, under Nuts		2	
C.15328	**LOWER WISHBONE LEVER**	27—23	2	
C.8673	**Bush** (Rubber) in Lower Wishbone Levers	27—24	4	
C.10778	**FULCRUM SHAFT, MOUNTING LOWER WISHBONE LEVERS TO FRONT SUSPENSION CROSS MEMBER**	27—25	2	
C.8693	**Washer,** Special, on Fulcrum Shafts	27—26	4	
NN.756/1	**Slotted Nut,** securing Lower Wishbone Levers to Fulcrum Shaft		4	
L.104/10U	**Split Pin,** retaining Slotted Nuts		4	
C.15699	**R.H. SEAT ASSEMBLY FOR FRONT SUSPENSION COIL SPRING**		1	
C.15700	**L.H. SEAT ASSEMBLY FOR FRONT SUSPENSION COIL SPRING**	27—27	1	
C.11917	**Screw,** Set, securing Spring Seats to Lower Wishbone Levers		10	
C.11923	**Screw,** Set, securing Spring Seats to Lower Wishbone Levers		2	
FG.106/X	**Washer,** Spring, on Setscrews		12	
C.21958	**FRONT SUSPENSION COIL SPRING**	27—28	2	
C.11874	**Packing Ring** ($\frac{1}{4}$" Thick) at top of Spring	27—29	As req'd	
C.11874/1	**Packing Ring** ($\frac{1}{8}$" Thick) at top of Spring	27—29	As req'd	

NOTE:— Packing Rings are used in accordance with the free length of Springs. A patch of coloured paint on the Spring Coils indicates the packing required. The table below shows the co-relation of Colour Code to Packing Rings.
This table does not apply to cars fitted with Air Conditioning.

Colour Code of Spring	Packing Required	
Red	$\frac{3}{8}$"	FOR R.H. SPRING ON R.H. DRIVE CARS ONLY
Yellow	$\frac{1}{4}$"	
Purple	$\frac{1}{8}$"	
Red	$\frac{1}{4}$"	FOR L.H. SPRING ON R.H. DRIVE CARS ONLY
Yellow	$\frac{1}{8}$"	
Purple	None required	

SECTION 24

FRONT SUSPENSION

Part No.	Description	Plate No.	No. per Unit	Remarks
	Red ¼" / Yellow ⅛" / Purple None required } L.H. DRIVE CARS ONLY			
C.8689	**BRACKET, UNDER SPRING SEAT, MOUNTING FRONT SHOCK ABSORBERS**	27—30	2	
C.11916	**Screw,** Set, securing Shock Absorber Bracket to Spring Seats	27—31	8	
C.8690	**Tab Washer** (Long) retaining Setscrews	27—32	2	
C.8677	**Tab Washer** (Short) retaining Setscrews	27—33	2	
C.24953	**FRONT SHOCK ABSORBER (NFP.64054607B)**	27—34	2	
8299	**Rubber Buffer,** at top of Shock Absorbers (64539036)	27—35	4	
6744	**Inner Washer,** between Rubber Buffers (9046/934)	27—36	4	
8298	**Outer Washer,** at top and bottom of Rubber Buffers (64539035)	27—37	4	
7695	**Spacing Collar,** at top of Shock Absorbers (9046/1170)	27—38	2	
UFN.137/L	**Nut,** securing Shock Absorber at top	27—39	2	
UFN.237/L	**Locknut,** for Shock Absorbers	27—40	2	
C.8925	**Bolt,** securing Shock Absorbers to Bracket on Spring Seats		2	
C.8737/4	**Nut,** Self-locking, on Bolts		2	
FW.107/T	**Washer,** Plain, under Self-locking Nuts		2	
C.386	**Washer,** Plain, at upper fixing of Shock Absorbers		2	
C.15337	**BALL PIN, IN STUB AXLE CARRIER, FOR ATTACHMENT OF LOWER WISHBONE LEVERS**	27—41	2	
C.22974	**Spigot,** retaining Ball Pins in Stub Axle Carriers	27—42	2	
C.23018	**Railko Socket,** supporting Ball Pins	27—43	2	
C.15341	**Shim** (.002" thick) between Stub Axle Carrier and Cap	27—44	As req'd	SELECTIVE SIZES
C.15342	**Shim** (.004" thick) between Stub Axle Carrier and Cap	27—44	As req'd	SELECTIVE SIZES
C.17175	**Shim** (.010" thick) between Stub Axle Carrier and Cap	27—44	As req'd	SELECTIVE SIZES
C.24222	**Cap,** under Ball Pins	27—45	2	
C.15344	**Bolt,** securing Caps to Stub Axle Carriers	27—46	8	
C.15343	**Tab Washer,** securing Bolts	27—47	4	
C.3044/1	**Grease Nipple,** in Cap, for lubrication of Lower Ball Pins	27—48	2	
C.22971	**Washer** (Nylon) under Grease Nipples	27—49	2	
C.22967	**GAITER ASSEMBLY, FOR LOWER BALL PINS**	27—50	2	
C.22970	**Insert,** between Stub Axle Carrier and Gaiter	27—51	2	
C.22969	**Ring,** securing Gaiters to Stub Axle Carriers	27—52	2	
C.8737/6	**Nut,** Self-locking, securing Ball Pins to Lower Wishbone Levers		2	
C.794	**Washer,** Special, under Self-locking Nuts		2	
C.26849	**STUB AXLE CARRIER**	27—53	2	
C.18843	**Water Deflector,** on Stub Axle Carrier, for protection of Front Hub Oil Seals	27—54	2	

Part No.	Description	Plate No.	No. per Unit	Remarks
C.19423	**STUB AXLE SHAFT**	27—55	8	
C.8667/7	**Nut,** Self-locking, securing Stub Axle Shafts and Tie Rod Levers to Stub Axle Carriers		2	
C.15350	**OIL SEAL FOR STUB AXLE SHAFTS**	27—56	2	
C.18842	**Water Deflector,** on Hubs, for Protection of Front Hub Oil Seals	27—57	2	
C.15351	**INNER BEARING, ON STUB AXLE SHAFTS, FOR HUBS (TIMKEN LM.67048-LM.67010)**	27—58	2	
C.15352	**OUTER BEARING, ON STUB AXLE SHAFTS, FOR HUBS (TIMKEN LM.11949-LM.11910)**	27—59	2	
C.23436	**FRONT HUB ASSEMBLY**		2	FOR USE WHEN DISC ROAD WHEELS ARE FITTED
C.13365	**Stud,** in Hubs, fixing Road Wheels		10	
C.3044/1	**Grease Nipple,** in Hubs		2	
C.3039	**CAP IN END OF FRONT HUBS**		2	
C.19225	**R.H. FRONT HUB**		1	FOR USE WHEN WIRE SPOKE ROAD WHEELS ARE FITTED
C.19226	**L.H. FRONT HUB**	27—60	1	
C.3076/1	**Grease Nipple,** in Hubs	27—61	2	
NN.756/L	**Slotted Nut,** securing Front Hubs on Stub Axle Shafts		2	
C.3400	**'D' Washer,** under Nuts		2	
L.104/10U	**Split Pin,** securing Nuts		2	
C.1102	**R.H. HUB CAP**		1	FOR USE WHEN WIRE SPOKE ROAD WHEELS ARE FITTED. NOT REQUIRED FOR CARS EXPORTED TO GERMANY, JAPAN, OR SWITZERLAND
C.1103	**L.H. HUB CAP**	27—62	1	

SECTION 24

FRONT SUSPENSION

Part No.	Description	Plate No.	No. per Unit	Remarks
C.14891	**R.H. HUB CAP**		1	
C.14892	**L.H. HUB CAP**	27—63	1	**REQUIRED ONLY WHEN WIRE SPOKE ROAD WHEELS ARE FITTED ON CARS EXPORTED TO GERMANY, JAPAN, OR SWITZERLAND**
C.14927	**TOOL FOR REMOVING AND FITTING HUB CAPS**	27—64	1	
C.26930	**R.H. FRONT BRAKE CALIPER ASSEMBLY (64032479)**		1	
C.26931	**L.H. FRONT BRAKE CALIPER ASSEMBLY (64032478)**		1	
C.26932	**Bolt,** securing Front Calipers and Upper Disc Shields to Stub Axle Carriers		2	
FG.107/X	**Washer,** Spring, on Bolts		2	**See also Front Brakes**
FW.107/T	**Washer,** Plain, under Spring Washers		2	
C.27024	**DISC ASSEMBLY FOR FRONT BRAKE CALIPERS**		2	
C.13546	**Bolt,** securing Discs to Hubs		10	
C.24119/4	**Nut,** Cleveloc, on Bolts		10	
C.26855	**R.H. TIE ROD LEVER**		1	
C.26856	**L.H. TIE ROD LEVER**	27—65	1	
C.27176	**Bolt,** securing Front Calipers and Tie Rod Levers to Stub Axle Carriers		2	
FG.107/X	**Washer,** Spring, on Bolts		2	
C.837	**Wire,** locking Bolts		As req'd	
C.27177/1	**Shim** (.004" thick) between Tie Rod Levers and Brake Calipers		As req'd	
C.27177/2	**Shim** (.010" thick) between Tie Rod Levers and Brake Calipers		As req'd	**SELECTIVE SIZES**
C.27177/3	**Shim** (.030" thick) between Tie Rod Levers and Brake Calipers		As req'd	

Part No.	Description	Plate No.	No. per Unit	Remarks
C.22679	**L.H. OUTER TIE ROD ASSEMBLY**	27—66	1	
C.9048	**Grease Nipple,** for lubrication of Ball Joints in Tie Rod Ends		2	
C.22976	**Washer,** Plain, under Grease Nipples		2	
C.22975	**Washer** (Rubber) under Plain Washers		2	
C.22683	**Gaiter,** over Ball Joints		2	
C.22685	**Ring,** securing Gaiters		2	
C.8737/5	**Nut,** Self-locking, securing Outer Tie Rod to Tie Rod Lever and Centre Tie Rod End		2	NOT REQUIRED FOR CARS EQUIPPED WITH POWER-ASSISTED STEERING
C.791	**Washer,** Special, under Nuts		2	
C.22678	**R.H. OUTER TIE ROD ASSEMBLY**		1	
	Individual items are as for L.H. Outer Tie Rod C.22679			
C.26098	**OUTER TIE ROD ASSEMBLY, FOR ADJUSTMENT OF STEERING TRACK**		2	REQUIRED ONLY FOR CARS EQUIPPED WITH POWER-ASSISTED STEERING
C.26101	**Tie Rod Tube**		2	
C.3165	**Clamp,** securing Tube to Tie Rod Ends		4	
UFB.131/11R	**Bolt,** through Clamps		4	
UFN.131/L	**Nut,** on Bolts		4	
FG.105/X	**Washer,** Spring, under Nuts		4	
FW.105/T	**Washer,** Plain, under Spring Washers		4	
C.26099	**End Assembly** (R.H. Thread) for Outer Tie Rods		2	
C.26100	**End Assembly** (L.H. Thread) for Outer Tie Rods		2	
C.26099	**END ASSEMBLY (R.H. THREAD) FOR OUTER TIE RODS**		2	
C.9048	**Grease Nipple,** for lubrication of Ball Joint in Tie Rod End		2	
C.22976	**Washer,** Plain, under Grease Nipple		2	
C.22975	**Washer** (Rubber) under Plain Washer		2	
C.22683	**Gaiter,** over Ball Joints		2	
C.22685	**Ring,** securing Gaiters		2	REQUIRED ONLY FOR CARS EQUIPPED WITH POWER-ASSISTED STEERING
C.8737/5	**Nut,** Self-Locking, securing Outer Tie Rod to Tie Rod Lever and to Centre Tie Rod End		2	
C.791	**Washer,** Special, under Self-locking Nuts		2	
C.26100	**END ASSEMBLY (L.H. THREAD) FOR OUTER TIE RODS**		2	
	Individual items are as for End Assembly C.26099			
C.17179	**CENTRE TIE ROD ASSEMBLY, FOR ADJUSTMENT OF STEERING TRACK**		1	NOT REQUIRED FOR CARS EQUIPPED WITH POWER-ASSISTED STEERING
C.8720	**Tie Rod Tube**	27—67	1	
C.3165	**Clamp,** securing Tube to Tie Rod Ends	27—68	2	
UFB.131/11R	**Bolt,** securing Clamps		2	
UFN.131/L	**Nut,** on Bolts		2	
FG.105/X	**Washer,** Spring, on Bolts		2	
FW.105/T	**Washer,** Plain, under Spring Washers		2	
C.17100	**End Assembly,** at R.H. side of Centre Tie Rod		1	
C.17101	**End Assembly,** at L.H. side of Centre Tie Rod	27—69	1	
C.8737/5	**Nut,** Self-locking, securing Tie Rod Ends to Drop Arm and Idler Lever	27—70	2	
C.791	**Washer,** Special, under Self-locking Nuts	27—71	2	

SECTION 24

FRONT SUSPENSION

Part No.	Description	Plate No.	No. per Unit	Remarks
C.17100	**END ASSEMBLY, AT R.H. SIDE OF CENTRE TIE ROD**		1	NOT REQUIRED FOR CARS EQUIPPED WITH POWER-ASSISTED STEERING
C.17099	**Pin and Bush Assembly**		1	
C.17101	**END ASSEMBLY, AT L.H. SIDE OF CENTRE TIE ROD**	27—69	1	
C.17099	**Pin and Bush Assembly**		1	
C.26393	**CENTRE TIE ROD ASSEMBLY**		1	REQUIRED ONLY FOR CARS EQUIPPED WITH POWER-ASSISTED STEERING
C.23329	**Tie Rod Tube**		1	NOTE: C.26393 is assembled with identical parts as for C.23382 used on other models. C.26393 is, however, built to a critical dimension and it is ESSENTIAL THAT ONLY THIS CONDITION SHOULD BE USED FOR REPLACEMENTS
C.3165	**Clamp,** securing Tube to Tie Rod Ends		2	
UFB.131/11R	**Bolt,** securing Clamps		2	
UFN.131/L	**Nut,** on Bolts		2	
FG.105/X	**Washer,** Spring, under Nuts		2	
FW.105/T	**Washer,** Plain, under Spring Washers		2	
C.19057	**End Assembly,** at R.H. side of Centre Tie Rod		1	
C.19059	**End Assembly,** at L.H. side of Centre Tie Rod		1	
C.8737/5	**Nut,** Self-Locking, securing Tie Rod Ends to Drop Arm and Idler Lever		2	
C.791	**Washer,** Special, under Self-Locking Nuts		2	
C.19057	**END ASSEMBLY, AT R.H. SIDE OF CENTRE TIE ROD**		1	REQUIRED ONLY FOR CARS EQUIPPED WITH POWER-ASSISTED STEERING
C.17099	**Pin and Bush Assembly**		1	
C.19059	**END ASSEMBLY, AT L.H. SIDE OF CENTRE TIE ROD**		1	
C.17099	**Pin and Bush Assembly**		1	
C.14035	**ANTI-ROLL BAR (HEAVY DUTY)**	27—72	1	
C.3054	**Bracket,** supporting Anti-Roll Bar	27—73	2	
C.14983	**Bush** (Rubber) inside Support Brackets	27—74	2	
C.18303	**Keeper Plate,** for Rubber Bushes	27—75	2	
C.20898	**Packing Block,** between Keeper Plate and Body Underframe	27—76	2	
UFS.137/13R	**Screw,** Set, securing Support Brackets		4	
FG.106/X	**Washer,** Spring, on Setscrews		4	
C.20764	**LINK BETWEEN ANTI-ROLL BAR AND COIL SPRING SEATS**	27—77	2	
C.10940	**Bush** (Rubber) in Eye of Links	27—78	2	
UFB.143/14R	**Bolt,** securing Links through Eye ends		2	
C.8737/4	**Nut,** Self-locking, on Bolts		2	

Part No.	Description	Plate No.	No. per Unit	Remarks
C.10996	**RUBBER PAD, AT TOP OF ANTI-ROLL BAR LINKS**	27—79	4	
C.11047	**Distance Tube,** through Rubber Pads	27—80	2	
C.11045	**Retaining Washer,** for Rubber Pads	27—81	4	
C.8737/3	**Nut,** Self-locking, securing Links to Anti-roll Bar		2	
C.14845	**STEERING BOX ASSEMBLY**	27—82	1	**STANDARD FITMENT ON R.H. DRIVE CARS**
C.14847	**Drop Arm,** on Steering Box		1	
C.14846	**STEERING BOX ASSEMBLY**		1	**STANDARD FITMENT ON L.H. DRIVE CARS**
C.14847	**Drop Arm,** on Steering Box		1	
C.8927	**HIGH RATIO STEERING BOX ASSEMBLY**		1	**SUPPLIED TO SPECIAL ORDER ON R.H. DRIVE CARS**
6429	**Drop Arm,** on Steering Box		1	
C.8928	**HIGH RATIO STEERING BOX ASSEMBLY**		1	**SUPPLIED TO SPECIAL ORDER ON L.H. DRIVE CARS**
6429	**Drop Arm,** on Steering Box		1	
C.11919	**Bolt** (Long) securing Steering Box to Front Suspension Cross Member		2	**NOT REQUIRED WHEN POWER-ASSISTED STEERING IS FITTED**
C.11920	**Bolt** (Short) securing Steering Box to Front Suspension Cross Member		2	
C.11958	**Tab Washer,** locking Bolts		2	
C.26998	**POWER - ASSISTED STEERING BOX ASSEMBLY**		1	**R.H. DRIVE CARS ONLY**
C.25973	**Drop Arm,** on Steering Box		1	
C.26999	**POWER - ASSISTED STEERING BOX ASSEMBLY**		1	**L.H. DRIVE CARS ONLY**
C.25974	**Drop Arm,** on Steering Box		1	
C.26604	**Bolt,** securing Power-Assisted Steering Box to Front Suspension Cross Member		1	
C.26605	**Bolt,** securing Power-Assisted Steering Box to Front Suspension Cross Member		2	
FG.106/X	**Washer,** Spring, on Bolts		3	
C.22440	**STEERING IDLER ASSEMBLY**	27—83	1	**NOT REQUIRED WHEN POWER-ASSISTED STEERING IS FITTED. FOR USE ONLY WITH STEERING BOX C.14845 OR C.14846**
C.22441	**Bracket,** mounting Idler	27—84	1	
C.19665	**Idler Spindle**	27—85	1	
UFN.150/L	**Nut,** at top of Spindle	27—86	1	
C.4490	**Tab Washer,** locking Nut	27—87	1	
C.16032	**'D' Washer,** under Tab Washer	27—88	1	

SECTION 24

FRONT SUSPENSION

Part No.	Description	Plate No.	No. per Unit	Remarks
	STEERING IDLER ASSEMBLY (cont'd)			
C.4219	**End Cap**	27—89	1	
C.16030	**Bearing,** at top of Idler Spindle (Timken 00050-00152X)	27—90	1	
C.16029	**Bearing,** at bottom of Idler Spindle (Timken 03062-03162)	27—91	1	
C.16035	**Seal** (Felt) on Spindle	27—92	1	
C.16034	**Retainer,** for Felt Seal	27—93	1	
C.16033	**Abutment Washer**	27—94	1	
C.16116	**Abutment Ring**	27—95	1	
C.22442	**Idler Lever**	27—96	1	
C.8737/4	**Nut,** Self-locking, securing Idler Lever to Spindle	27—94	1	
C.789	**Washer,** Special, under Self-locking Nut	27—98	1	
UFS.137/9R	**Screw,** Set, controlling Steering Lock	27—99	2	
UFN.237/L	**Nut,** locking Setscrews	27—100	2	
C.22445	**STEERING IDLER ASSEMBLY**		1	**NOT REQUIRED WHEN POWER-ASSISTED STEERING IS FITTED. FOR USE ONLY WITH STEERING BOX C.8927 OR C.8928**
C.22444	**Idler Lever**		1	
	All other items are as for Steering Idler C.22440			
C.11919	**Bolt** (long) securing Steering Idler to Front Suspension Cross Member		2	**NOT REQUIRED WHEN POWER-ASSISTED STEERING IS FITTED**
C.11920	**Bolt** (Short) securing Steering Idler to Front Suspension Cross Member		2	
FG.106/X	**Washer,** Spring, on Bolts		4	
C.16022	**STEERING IDLER ASSEMBLY**		1	**FOR R.H. DRIVE CARS EQUIPPED WITH POWER-ASSISTED STEERING**
C.16024	**Bracket,** mounting Idler		1	
C.16028	**Idler Spindle**		1	
UFN.150/L	**Nut,** at top of Spindle		1	
C.4490	**Tab Washer,** locking Nut		1	
C.16032	**'D' Washer,** under Tab Washer		1	
C.4219	**End Cap**		1	
C.16030	**Bearing,** at top of Idler Spindle (Timken 00050-00152X)		1	
C.16029	**Bearing,** at bottom of Idler Spindle (Timken 03062-03162)		1	
C.16035	**Seal** (Felt) on Spindle		1	
C.16034	**Retainer,** for Felt Seal		1	
C.16033	**Abutment Washer**		1	
C.16116	**Abutment Ring**		1	
C.16026	**Idler Lever**		1	
C.8737/4	**Nut,** Self-locking, securing Idler Lever to Spindle		1	
C.789	**Washer,** Special, under Self-locking Nut		1	
C.16023	**STEERING IDLER ASSEMBLY**		1	**FOR L.H. DRIVE CARS EQUIPPED WITH POWER-ASSISTED STEERING**
C.16025	**Bracket,** mounting Idler		1	
C.16027	**Idler Lever**		1	
	All other items are as for Steering Idler C.16022			
C.11920	**Bolt,** securing Steering Idler to Front Suspension Cross Member		2	**REQUIRED ONLY WHEN POWER-ASSISTED STEERING IS FITTED**
FG.106/X	**Washer,** Spring, on Bolts		2	
C.16038	**Bolt,** securing Steering Idler to Front Suspension Cross Member		1	
C.8737/3	**Nut,** Self-locking, on Bolt		1	
FW.106/T	**Washer,** Plain, under Self-locking Nut		1	

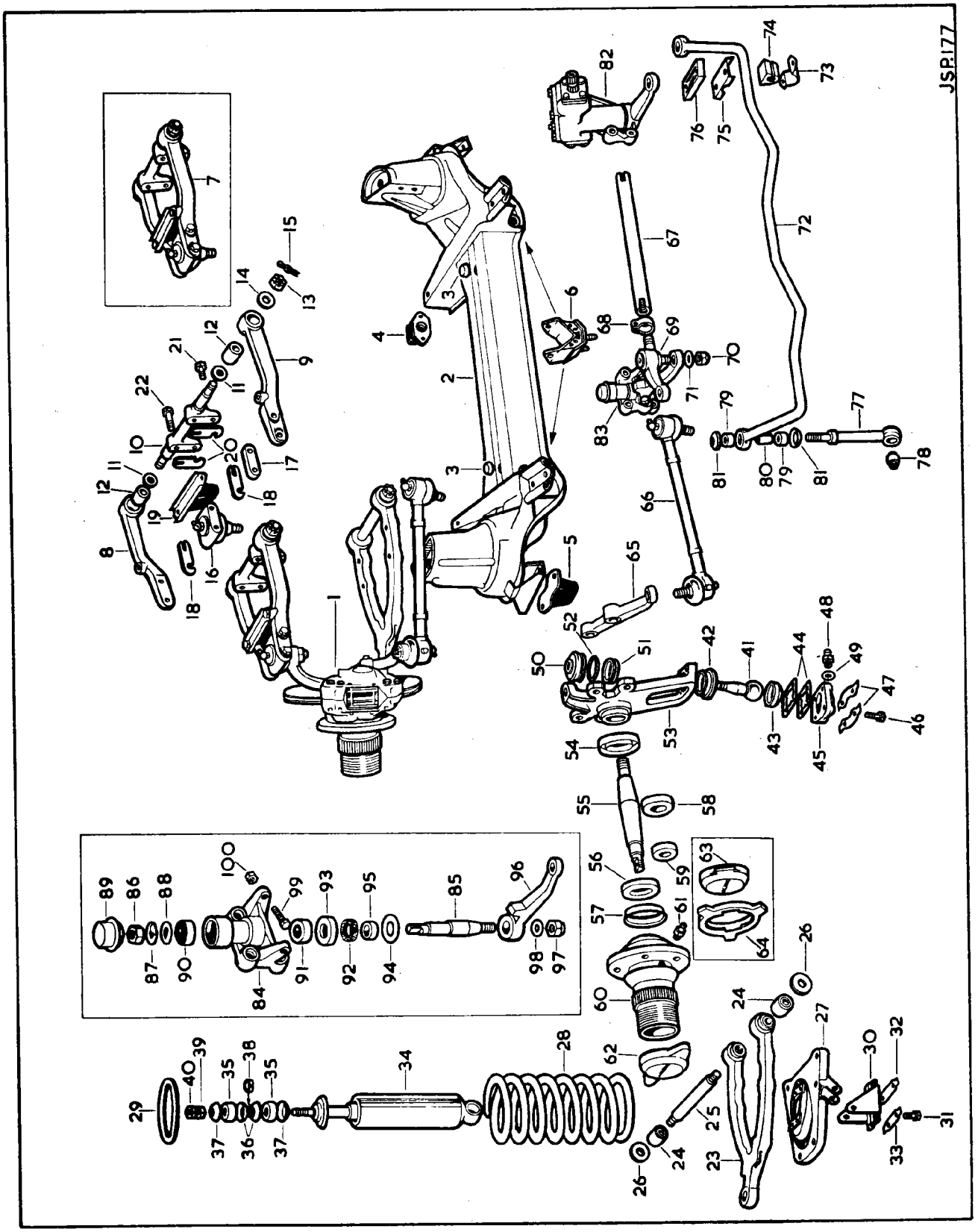

PLATE 27

SECTION 25

REAR SUSPENSION

Part No.	Description	Plate No.	No. per Unit	Remarks
C.21393	**REAR SUSPENSION CROSS MEMBER ASSEMBLY**	28—1	1	
C.17198	**RUBBER MOUNTING, FOR ATTACHMENT OF CROSS MEMBER TO BODY**	28—2	4	
UFS.131/7R	**Screw,** Set, securing Rubber Mounting to Cross Member		8	
C.8667/2	**Nut,** Self-locking, on Screws and on Studs of Rubber Mountings		10	
C.8737/2	**Nut,** Self-locking, on Studs of Rubber Mountings		2	
FW.105/T	**Washer,** Plain ,on Studs of Rubber Mountings		4	
UFB.131/25R	**Bolt,** securing Rubber Mountings to Body		8	
C.8737/2	**Nut,** Self-locking, on Bolts		8	
C.21977	**MOUNTING, FOR INNER FULCRUM SHAFT**	28—3	2	
C.17009	**Screw,** Set (Long) securing Fulcrum Mountings to Final Drive at rear		2	
C.17010	**Screw,** Set (Short) securing Fulcrum Mountings to Final Drive at front		2	
C.17722	**Shim,** under Fulcrum Mountings for Fulcrum Shaft alignment (.005" thick)	28—4	As req'd	**SELECTIVE SIZES**
C.17723	**Shim,** under Fulcrum Mountings for Fulcrum Shaft alignment (.007" thick)	28—4	As req'd	**SELECTIVE SIZES**
C.837	**Wire,** locking Setscrews		As req'd	
C.20651	**PLATE, BRACING LOWER FACE OF CROSS MEMBER AT CENTRE**	28—5	1	
UFS.131/5R	**Screw,** Set, securing Plate to Cross Member Flanges and Inner Fulcrum Mountings		14	
FG.105/X	**Washer,** Spring, on Setscrews, at fixings to Inner Fulcrum Mountings		8	
C.8737/2	**Nut,** Self-locking, on Setscrews, at fixings to Flanges		6	
C.20297	**R.H. WISHBONE ASSEMBLY**	28—6	1	
C.20298	**L.H. WISHBONE ASSEMBLY**		1	
C.17008	**FULCRUM SHAFT, FOR INNER MOUNTING OF WISHBONES**	28—7	8	
C.17663/1	**Distance Tube,** on Fulcrum Shafts	28—8	2	
C.17168/1	**Bearing Tube,** on Fulcrum Shafts	28—9	4	
C.17167	**Needle Bearing,** on Tubes, for Wishbones	28—10	8	
C.17166	**Thrust Washer,** inner, at each end of Bearing Tubes	28—11	8	
C.17213	**Sealing Ring,** on Inner Thrust Washers	28—12	8	
C.17936	**Retainer,** for Sealing Rings	28—13	8	
C.17165	**Thrust Washer,** outer, on Fulcrum Shafts	28—14	8	
C.8667/5	**Nut,** Self-locking, on Fulcrum Shafts		4	
C.3044/1	**Grease Nipple,** for lubrication of Inner Fulcrum Shaft Bearing (Tecalemit NA.6625)	28—15	4	

Part No.	Description	Plate No.	No. per Unit	Remarks
C.16624	**FULCRUM SHAFT, MOUNTING WISHBONES TO HUB CARRIERS**	28—16	2	
C.16623	**Sleeve,** on Fulcrum Shafts	28—17	4	
C.16626	**Shim,** between Sleeves, adjusting Bearing End Float (.004" thick)	28—18	As req'd	SELECTIVE SIZES
C.16626/3	**Shim,** between Sleeves, adjusting Bearing End Float (.007" thick)	28—18	As req'd	SELECTIVE SIZES
C.16029	**Bearing** (Taper Roller) on Fulcrum Shafts (Timken 03062-03162)	28—19	4	
C.16628	**Seating Ring,** on Fulcrum Shafts, for Oil Seals	28—20	4	
C.20178	**Oil Seal** (Felt) on Fulcrum Shafts	28—21	4	
C.20179	**Container,** for Oil Seals	28—22	4	
C.20180	**Spacer,** between Bearings and Oil Seal Containers	28—23	4	
C.20182	**Retaining Washer,** on Seating Rings, for Oil Seals	28—24	4	
C.16626/1	**Shim,** on Fulcrum Shafts, for centralisation of Hub Carriers in Wishbone Forks (.004" thick)	28—25	As req'd	SELECTIVE SIZES
C.16626/2	**Shim,** on Fulcrum Shafts, for centralisation of Hub Carriers in Wishbone Forks (.007" thick)	28—25	As req'd	SELECTIVE SIZES
C.8667/7	**Nut,** Self-locking, on Fulcrum Shafts		4	
C.26700	**HUB CARRIER**	28—26	2	
C.9048	**Grease Nipple,** in Carriers, for lubrication of Fulcrum Shaft Bearings (Tecalemit NA.6626)	28—27	2	FOR USE WHEN DISC TYPE ROAD WHEELS ARE FITTED
C.3044/1	**Grease Nipple,** in Carriers, for lubrication of Fulcrum Shaft Bearings (Tecalemit NA.6625)		2	FOR USE WHEN WIRE SPOKE ROAD WHEELS ARE FITTED
C.18124	**Grease Retaining Cap,** at top of Hub Carriers	28—28	2	
C.20835	**REAR HUB ASSEMBLY**	28—29	2	FOR USE WHEN DISC TYPE ROAD WHEELS ARE FITTED
C.13365	**Stud,** in Hubs, fixing Road Wheels		10	
C.20813	**Water Thrower,** on Rear Hubs		2	
C.20889	**R.H. REAR HUB ASSEMBLY**		1	FOR USE WHEN WIRE SPOKE WHEELS ARE FITTED
C.20813	**Water Thrower,** on Rear Hub		1	FOR USE WHEN WIRE SPOKE WHEELS ARE FITTED
C.20890	**L.H. REAR HUB ASSEMBLY**		1	FOR USE WHEN WIRE SPOKE WHEELS ARE FITTED
C.20813	**Water Thrower,** on Rear Hub		1	FOR USE WHEN WIRE SPOKE WHEELS ARE FITTED
C.1102	**R.H. HUB CAP**		1	FOR USE WHEN WIRE SPOKE WHEELS ARE FITTED. NOT REQUIRED FOR CARS EXPORTED TO GERMANY JAPAN, OR SWITZERLAND
C.1103	**L.H. HUB CAP**		1	FOR USE WHEN WIRE SPOKE WHEELS ARE FITTED. NOT REQUIRED FOR CARS EXPORTED TO GERMANY JAPAN, OR SWITZERLAND

SECTION 25

REAR SUSPENSION

Part No.	Description	Plate No.	No. per Unit	Remarks
C.14891	**R.H. HUB CAP**		1	FOR USE WHEN WIRE SPOKE WIRE WHEELS ARE FITTED TO CARS EXPORTED TO GERMANY, JAPAN, OR SWITZERLAND
C.14892	**L.H. HUB CAP**		1	
C.14927	**TOOL FOR REMOVING AND FITTING HUB CAPS**		1	
C.24789	**OIL SEAL (OUTER) FOR HUBS**	28—30	2	
C.24791	**Seating Ring,** on Hubs, for Outer Oil Seal	28—31	2	
C.19066	**OUTER BEARING (TAPER ROLLER) FOR HUBS (TIMKEN 18690-18620)**	28—32	2	
C.15230	**INNER BEARING (TAPER ROLLER) FOR HUBS (TIMKEN 18590-18520)**	28—33	2	
C.19110/A	**Spacer,** on Half-Shaft Splined Yoke, for Hub Bearing Adjustment (.109" thick)	28—34	2	SELECTIVE SIZES
C.19110/B	**Spacer,** on Half-Shaft Splined Yoke, for Hub Bearing Adjustment (.112" thick)	28—34	2	
C.19110/C	**Spacer,** on Half-Shaft Splined Yoke, for Hub Bearing Adjustment (.115" thick)	28—34	2	
C.19110/D	**Spacer,** on Half-Shaft Splined Yoke, for Hub Bearing Adjustment (.118" thick)	28—34	2	
C.19110/E	**Spacer,** on Half-Shaft Splined Yoke, for Hub Bearing Adjustment (.121" thick)	28—34	2	
C.19110/F	**Spacer,** on Half-Shaft Splined Yoke, for Hub Bearing Adjustment (.124" thick)	28—34	2	
C.19110/G	**Spacer,** on Half-Shaft Splined Yoke, for Hub Bearing Adjustment (.127" thick)	28—34	2	
C.19110/H	**Spacer,** on Half-Shaft Splined Yoke, for Hub Bearing Adjustment (.130" thick)	28—34	2	
C.19110/J	**Spacer,** on Half-Shaft Splined Yoke, for Hub Bearing Adjustment (.133" thick)	28—34	2	
C.19110/K	**Spacer,** on Half-Shaft Splined Yoke, for Hub Bearing Adjustment (.136" thick)	28—34	2	
C.19110/L	**Spacer,** on Half-Shaft Splined Yoke, for Hub Bearing Adjustment (.139" thick)	28—34	2	
C.19110/M	**Spacer,** on Half-Shaft Splined Yoke, for Hub Bearing Adjustment (.142" thick)	28—34	2	
C.19110/P	**Spacer,** on Half-Shaft Splined Yoke, for Hub Bearing Adjustment (.145" thick)	28—34	2	
C.19110/Q	**Spacer,** on Half-Shaft Splined Yoke, for Hub Bearing Adjustment (.148" thick)	28—34	2	
C.19110/R	**Spacer,** on Half-Shaft Splined Yoke, for Hub Bearing Adjustment (.151" thick)	28—34	2	
C.15231	**OIL SEAL (INNER) FOR HUBS**	28—35	2	
C.15232	**Seating Ring,** on Half-Shaft Splined Yoke, for Inner Oil Seal	28—36	2	

REAR SUSPENSION

Part No.	Description	Plate No.	No. per Unit	Remarks
C.23655/3	**HALF-SHAFT ASSEMBLY (05/501506)**	28—37	2	
9406	**Flange Yoke** (05/202034)	28—38	2	
9407	**Splined Yoke** (05/221027)	28—39	2	
10420	**Journal Assembly**,connecting Yoke to Half-Shafts (05/501471)	28—40	4	
10420	**JOURNAL ASSEMBLY, CONNECTING YOKES TO HALF-SHAFTS (05/501471)**	28—40	4	
10421	**Circlip**, retaining Needle Bearings (05/245032)		16	
C.16621	**Shim**, behind Flange Yokes, for adjustment of Rear Wheel Camber Angle (.020" thick)	28—41	As req'd	
C.15349	**Nut**, Self-locking, securing Flange Yokes and Brake Discs to Final Drive Unit Flanges		8	
UFN.375/L	**Slotted Nut**, securing Splined Yokes in Hubs		2	
C.24923	**Washer**, Special, under Slotted Nut		2	
L.105/13U	**Split Pin**, locking Slotted Nut		2	
C.23615	**JOINT COVER, PROTECTING INNER JOURNAL ASSEMBLIES**	28—42	4	
C.23616	**JOINT COVER, PROTECTING OUTER JOURNAL ASSEMBLIES**	28—43	4	
BD.1814/4	**Pop Rivet**, securing Joint Covers together		16	
C.2905/12	**Clip**, securing Covers to Half-Shafts		4	
C.23167	**REAR SUSPENSION COIL SPRING**	28—44	4	
C.23413	**Packing Ring**, between bottom of Spring and Seat on Shock Absorber	28—45	4	
C.22847	**REAR SHOCK ABSORBER (GIRLING NAP.64054579C)**	28—46	4	
C.20096	**Dust Shield Assembly** (64541894)	28—47	4	
9415	**Bush** (Rubber) in eyes of Shock Absorber (64541886)	28—48	8	
C.19821	**Seat**, for Rear Suspension Coil Spring (64541895)	28—49	4	
8687	**Retainer**, for Rear Suspension Coil Spring (64540894)	28—50	8	
UFB.143/16R	**Bolt**, securing upper end of Shock Absorbers to Rear Suspension Cross Member		4	
C.17012	**Sleeve**, on Bolts		4	
C.8737/4	**Nut**, Self-locking, on Bolts		4	
FW.107/T	**Washer**, Plain, under Nuts		4	
C.17013	**Mounting Shaft**, through Wishbones, fixing lower end of Shock Absorbers	28—51	2	
C.8737/4	**Nut**, Self-locking, securing Shock Absorbers to Wishbones		4	
C.3052	**Washer**, Special, under Self-locking Nuts		4	

SECTION 25

REAR SUSPENSION

Part No.	Description	Plate No.	No. per Unit	Remarks
C.19800	**BUMP STOP, ON BODY UNDER-FRAME**	28—52	2	
C.8667/2	**Nut,** Self-locking, securing Bump Stops		4	
C.23824	**RADIUS ARM ASSEMBLY**	28—53	2	
C.23782	**Bush** (Rubber) at front end of Radius Arms	28—54	2	
C.17146	**Bush** (Rubber) at rear end of Radius Arms	28—55	2	
C.17149/1	**Bolt,** securing Radius Arms to Wishbones		2	
C.8737/5	**Nut,** Self-locking, on Bolts		2	
C.23496	**SAFETY STRAP ASSEMBLY AT MOUNTING OF RADIUS ARMS TO BODY**	28—56	2	**FOR USE ONLY WITH $\frac{7}{16}$" DIAMETER BOLTS**
C.19045	**Bolt,** securing Radius Arms to Body		2	**FOR USE ONLY WITH SAFETY STRAP C.23496**
C.837	**Wire,** locking Bolts		As req'd	
C.23496/1	**SAFETY STRAP ASSEMBLY AT MOUNTING OF RADIUS ARMS TO BODY**		2	**FOR USE ONLY WITH $\frac{1}{2}$" DIAMETER BOLTS**
C.24225	**Bolt,** securing Radius Arms to Body		2	**FOR USE ONLY WITH SAFETY STRAP C.23496/1**
C.837	**Wire,** locking Bolts		As req'd	
UFS.131/6R	**Screw,** Set, securing Safety Straps to Body		4	
C.725	**Washer,** Shakeproof, on Setscrews		4	

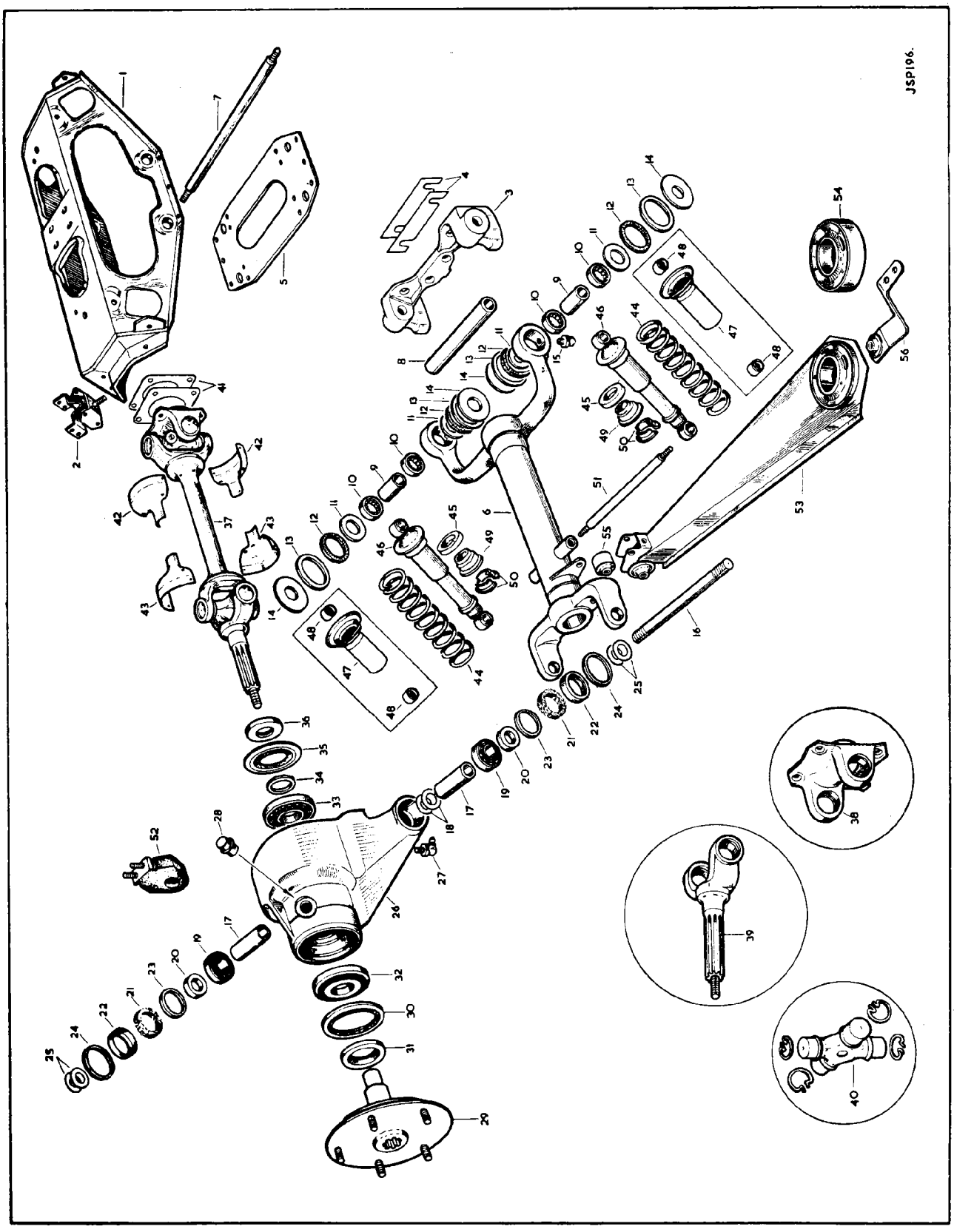

PLATE 28

SECTION 26

ROAD WHEELS

Part No.	Description	Plate No.	No. per Unit	Remarks
C.27022	**DISC TYPE ROAD WHEEL (5J. RIM × 15" DIAMETER)**		5	
C.3041	**Nut**, securing Road Wheels		20	
C.14766	**WIRE SPOKE ROAD WHEEL (5K. RIM) × 15" DIAMETER) (PAINTED STOVED ALUMINIUM)**		5	**SUPPLIED TO SPECIAL ORDER ONLY**
7784	**Long Spoke**		120	
7790	**Short Spoke**		240	
C.5604	**Nipple**, for Spokes		360	
C.14802	**WIRE SPOKE ROAD WHEEL (5K. RIM × 15" DIAMETER) (CHROMIUM PLATED)**		5	**SUPPLIED TO SPECIAL ORDER ONLY**
7796	**Long Spoke**		120	
7801	**Short Spoke**		240	
C.9144	**Nipple**, for Spokes		360	
C.24198	**TYRE FOR ROAD WHEELS (185×15 'SP.41')**		5	
C.24197	**TYRE FOR ROAD WHEELS (185 × 15 'SP.41', WHITEWALL)**		5	**SUPPLIED TO SPECIAL ORDER ONLY**
C.24199	**TUBE FOR TYRES (185 × 15)**		5	
	BALANCE WEIGHTS FOR ROAD WHEELS			
C.3985	**Balance Weight** (½ Oz.)		As req'd	
C.3986	**Balance Weight** (1 Oz.)		As req'd	
C.3987	**Balance Weight** (1½ Oz.)		As req'd	
C.3988	**Balance Weight** (2 Oz)		As req'd	
C.3989	**Balance Weight** (2½ Oz.)		As req'd	
C.3990	**Balance Weight** (3 Oz.)		As req'd	
C.27134	**NAVE PLATE FOR ROAD WHEELS**		4	**FOR USE ONLY WITH DISC TYPE ROAD WHEELS**
C.27140	**BADGE (JAGUAR) FOR NAVE PLATE**		4	**FOR USE ONLY WITH DISC TYPE ROAD WHEELS**
C.22583	**Spire Nut**, securing Badge to Nave Plates		8	
C.21983	**RIMBELLISHER FOR ROAD WHEELS**		4	

ROAD WHEELS

Part No.	Description	Plate No.	No. per Unit	Remarks
C.17923	RIMBELLISHER (FOR USE WITH 5J. ROAD WHEELS)		4	SUPPLIED TO SPECIAL ORDER ONLY
C.17940/1	R.H. WHEEL DISC (FOR USE WITH 5J. ROAD WHEELS)		2	SUPPLIED TO SPECIAL ORDER ONLY
C.17940	L.H. WHEEL DISC (FOR USE WITH 5J. ROAD WHEELS)		2	

POWER-ASSISTED STEERING UNIT

Part No.	Description	Plate No.	No. per Unit	Remarks
C.26998	**STEERING BOX ASSEMBLY (HBE.2200)**		1	**R.H. DRIVE CARS ONLY**
11277	**Steering Box,** complete with Sector Shaft Bush and Feed Pipe Seat (HBD.1510)	38—1	1	
10996	**Screw,** sealing Valve Adjustment Aperture at top of Steering Box (HBA.1028)	38—2	1	
11278	**Valve and Worm Assembly** (HBB.1530)	38—3	1	
10998	**Ball Bearing Assembly,** supporting Worm at top (HBA.1165)	38—4	1	
10999	**Ball Bearing Assembly,** supporting Worm at bottom (HBA.1155)	38—5	1	
11000/1	**Shim** (.002" thick) between Bottom Bearing and Steering Box (HBB.1038)	38—6	As req'd	**SELECTIVE SIZES**
11000/2	**Shim** (.003" thick) between Bottom Bearing and Steering Box (HBB.1038)	38—6	As req'd	
11000/3	**Shim** (.010" thick) between Bottom Bearing and Steering Box (HBB.1038)	38—6	As req'd	
11422	**Valve Housing Assembly** (HBC.1120)	38—7	1	
11003	**Bolt** (Short) securing Valve Housing to Steering Box (HB.1032)	38—8	3	
11004	**Bolt** (Long) securing Valve Housing to Steering Box (HB.1033)	38—9	1	
FG.107/X	**Washer,** Spring, on Bolts (S.9030)	38—10	4	
11280	**Alignment Washer,** on Worm Shaft, above Valve Housing (HBB.1508)	38—11	1	
11005/1	**Shim** (.001" thick) between Valve Housing and Top Bearing (HBA.1018)	38—12	As req'd	**SELECTIVE SIZES**
11005/2	**Shim** (.002" thick) between Valve Housing and Top Bearing (HBA.1018)	38—12	As req'd	
11005/3	**Shim** (.010" thick) between Valve Housing and Top Bearing (HBA.1018)	38—12	As req'd	
11281	**Feed Pipe Assembly** (HBC.1509)	38—13	1	
11007	**Piston and Rack** (HBC.1002)	38—14	1	
N.S.S.	Sealing Ring ('Teflon') on Piston (HBB.1012)	38—15	1	**NOT SUPPLIED SEPARATELY. USE SEALS KIT 11027**
N.S.S.	'O' Ring, inside Sealing Ring (HBB.1014)	38—16	1	
11008	**End Plate,** for Cylinder (HBB.1004)	38—17	1	
N.S.S.	Seal, around End Plate (HB.1013)	38—18	1	**NOT SUPPLIED SEPARATELY. USE SEALS KIT 11026**
11009	**Clip,** securing End Plate (HBB.1011)	38—19	1	
11010	**Plug,** adjusting Rack (HBB.1007)	38—20	1	
N.S.S.	Seal, on Adjusting Plug (HB.1016)	38—21	1	**NOT SUPPLIED SEPARATELY. USE SEALS KIT 11026**
11011	**Screw,** locking Adjusting Plug (HBA.1022)	38—22	1	
11012	**Thrust Pad,** between Plug and Rack (HBA.1006)	38—23	1	
11013	**Sector Shaft and Worm Follower Assembly** (HBA.1195)	38—24	1	
11014	**Top Cover Assembly** (HBA.1175)	38—25	1	
11015	**Bleed Screw,** in Top Cover (HBB.1074)	38—26	1	
N.S.S.	Washer, on Bleed Screw (S.9742)	38—27	1	**NOT SUPPLIED SEPARATELY. USE SEALS KIT 11026**
11016	**Screw and Lockwasher Assembly,** securing Top Cover to Steering Box (HBB.1023)	38—28	4	
N.S.S.	Seal, Inner, at bottom of Sector Shaft (HBB.1021)	38—29	1	**NOT SUPPLIED SEPARATELY. USE SEALS KIT 11026**
N.S.S.	Washer, between Inner and Outer Seals (HBB.1039)	38—40	1	
N.S.S.	Seal, Outer, at bottom of Sector Shaft (HBB.1019)	38—31	1	
11017	**Circlip,** retaining Sector Shaft Seals (HB.1027)	38—32	1	
C.25973	**Drop Arm,** on Sector Shaft (HBC.1504)	38—33	1	
11018	**Nut,** securing Drop Arm (S.9309)	38—34	1	
11019	**Tab Washer,** locking Nut (P.4101)	38—35	1	

SECTION 36

POWER-ASSISTED STEERING UNIT

Part No.	Description	Plate No.	No. per Unit	Remarks
C.26999	**STEERING BOX ASSEMBLY (HBE.2300)**		1	**L.H. DRIVE CARS ONLY**
11282	**Steering Box,** complete with Sector Shaft Bush and Feed Pipe Seat (HBD.1610)		1	
11283	**Valve and Worm Assembly** (HBB.1630)		1	
11423	**Valve Housing Assembly** (HBC.2310)		1	
11285	**Feed Pipe Assembly** (HBC.1609)		1	
11024	**Sector Shaft and Worm Follower Assembly** (HBA.1205)		1	
11025	**Top Cover Assembly** (HBA.1215)		1	
C.25974	**Drop Arm,** on Sector Shaft (HBC.1604)		1	
	All other items are as for Steering Box C.26998			
C.26604	**Bolt,** securing Steering Box to Front Suspension Cross Member		1	
C.26605	**Bolt,** securing Steering Box to Front Suspension Cross Member		2	
FG.106/X	**Washer,** Spring, on Bolts		3	
11026	**SEALS KIT (EXTERNAL SEALS) FOR STEERING BOX (HBA.1185)**		1	
	comprising:—			
	Seat, for Feed Pipe (HBB.1129)	2		
	Seat, for High Pressure Pipe (HBC.1132)	1		
	Seat, for Low Pressure Pipe (HBB.1124)	1		
	Rotor Seal, Inner (HBA.1126)	1		
	Rotor Seal, Outer (HBA.1127)	1		
	Seal, under Top Cover (HBA.1031)	1		
	Nut, Self-Locking, for Sector Shaft Adjustment (HBB.1029)	1		
	Washer, on Bleed Screw (S.9742)	1		
	Seal, on Rack Adjusting Plug (HB.1016)	1		
	Seal, around Cylinder End Plate (HB.1013)	1		
	Sector Shaft Seal, Inner (HBB.1021)	1		
	Sector Shaft Seal, Outer (HBB.1019)	1		
	Washer, between Sector Shaft Seals (HBB.1039)	1		
11027	**SEALS KIT (INTERNAL SEALS) FOR STEERING BOX (HBA.1190)**		1	
	comprising:—			
	'O' Ring, on Valve Housing (HB.1131)	1		
	Sealing Ring ('Teflon') on Valve Sleeve (HBA.1107)	3+1 Spare		
	Sealing Ring, ('Teflon') on Piston (HBB.1012)	1		
	'O' Ring, inside Teflon Ring (HBB.1014)	1		

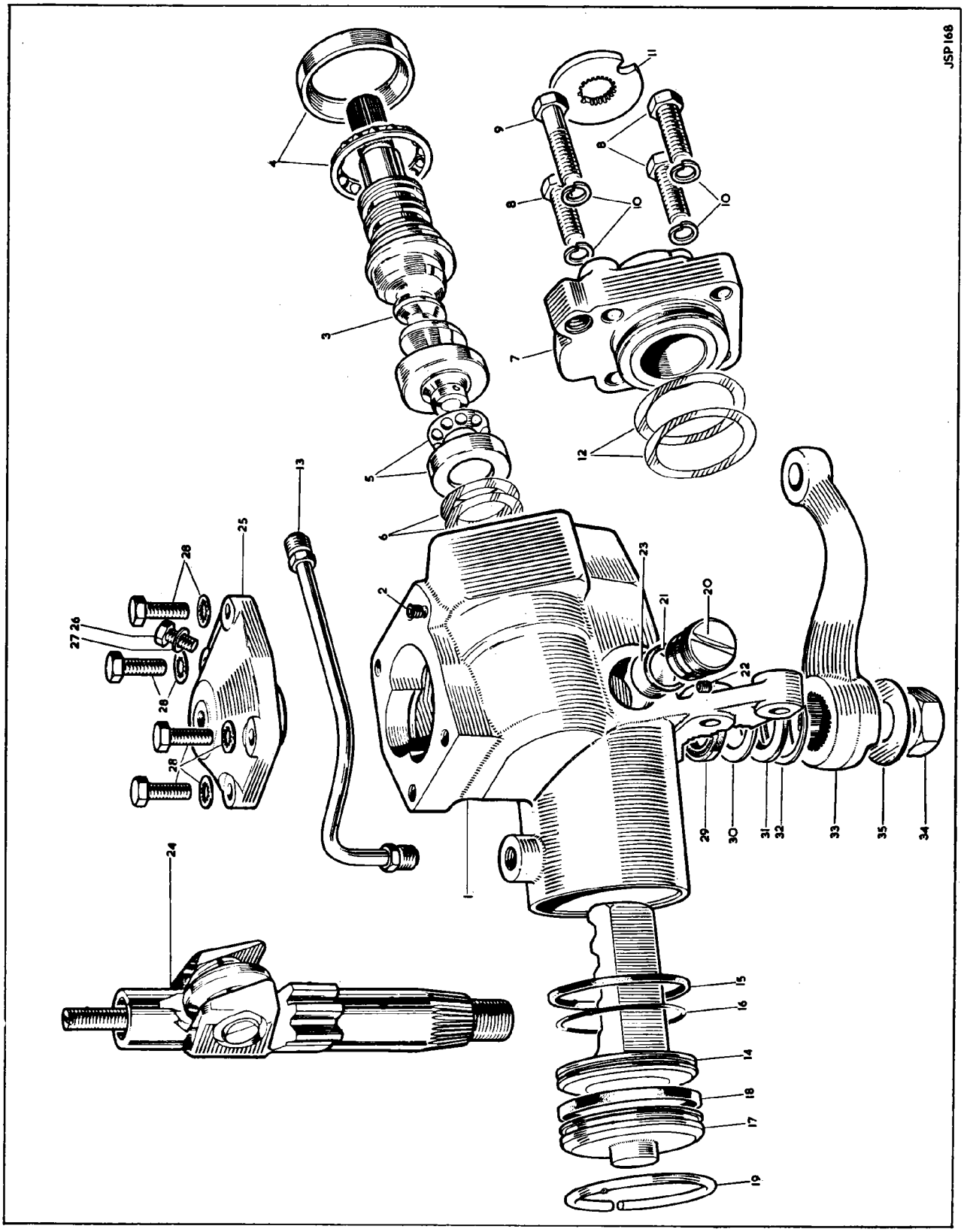
JSP168
1
2
3
4
5
6
7
8
9
10
11
12
13
14
15
16
17
18
19
20
21
22
23
24
25
26
27
28
29
30
31
32
33
34
35

PLATE 38

STEERING UNIT

Part No.	Description	Plate No.	No. per Unit	Remarks
C.14845	**STEERING BOX ASSEMBLY, COMPLETE (SF.414) (RATIO 20.3 : 1)**		1	**STANDARD FITMENT TO R.H. DRIVE CARS ONLY**
7919	**Steering Box only** (S.1-135)	38A—1	1	
6409	**Trunnion Bush,** at bottom of Steering Box(19-9-5)	38A—2	1	
7921	**Inner Column Worm** (S.3-290)	38A—3	1	
7922	**Main Nut** (complete with Transfer Tube but less Steel Balls) (S.2-52)	38A—4	1	
8753	**Roller,** on Spigot of Main Nut, for Rockershaft Traverse (24-5-4)	38A—5	1	
136	**Steel Ball,** around Main Nut and Inner Column Worm (17-3-1)	38A—6	51	
7925	**Ball Race** (Adjustable) at each end of Inner Column (S.23-15)	38A—7	2	
7926	**Distance Piece,** between Adjustable Ball Race and End Plates (12-9-32)	38A—8	2	
6419	**End Plate,** at bottom of Steering Box (S.11-38)	38A—9	1	
6414	**Gasket,** between Lower End Plate and Steering Box (S.10-15) (.003" thick)	38A—10	As req'd	
6416	**End Plate,** at upper end of Steering Box (adjacent to Splined end of Inner Column Worm)(S.11-43)	38A—11	1	
7696	**Plate,** retaining Oil Seal in End Plate (S.10-99)	38A—12	1	
6415	**Oil Seal,** in Upper End Plate, for Inner Column Worm (27-8-20)	38A—13	1	
6417	**Gasket,** between Upper End Plate and Steering Box (S.10-42) (.003" thick)	38A—14	As req'd	
6418	**Shim,** under End Plates, for adjustment of end float on inner Column Worm (S.10-14) (.005" thick)	38A—15	As req'd	
JCS.131/7R	**Screw,** Set, securing End Plates to Steering Box	38A—16	8	
FG.105/X	**Washer,** Spring, on Setscrews	38A—17	8	
7927	**Rockershaft** (S.7-73)	38A—18	1	
6427	**'O' Ring,** at bottom of Steering Box, for Rockershaft (27-9-5)	38A—19	1	
6428	**Washer,** retaining 'O' Ring in Steering Box (12-9-2)	38A—20	1	
C.14847	**Drop Arm,** on Rockershaft (S.9-149)	38A—21	1	
SFN.275/L	**Nut,** securing Drop Arm to Rockershaft	38A—22	1	
6430	**Washer,** Spring, under Nut (12-8-22)	38A—23	1	
7929	**Cover Plate,** at top of Steering Box (S.12-67)	38A—24	1	
6423	**Gasket,** under Cover Plate (S.10-16)	38A—25	1	
JCS.131/8R	**Screw,** Set, securing Cover Plate to Steering Box	38A—26	4	
FG.105/X	**Washer,** Spring, on Setscrews	38A—27	4	
7931	**Screw,** in Cover Plate, for adjustment of Rockershaft (25-8-7)	38A—28	1	
7932	**Nut,** locking Adjusting Screw (11-8-10)	38A—29	1	
7597	**Spring,** inside Adjusting Screw (36-7-2)	38A—30	1	
7933	**Bolt,** compressing Spring (10-7-3)	38A—31	1	
144	**Oil Filler Plug,** in Cover Plate (21-7-2)	38A—32	1	
C.2296/5	**Washer,** under Filler Plug	38A—33	1	
C.14846	**STEERING BOX ASSEMBLY, COMPLETE (SF.415) (RATIO 20.3 : 1)**		1	**STANDARD FITMENT TO L.H. DRIVE CARS ONLY**
7920	**Steering Box only** (S.1-134)		1	
7923	**Inner Column Worm** (S.3-292)		1	
7924	**Main Nut** (complete with Transfer Tube but less Steel Balls) (S.2-53)		1	
7930	**Cover Plate,** at top of Steering Box (S.12-68)		1	
	All other items are as for Steering Box C.14845			
C.11919	**Bolt** (long) securing Steering Box to Front Suspension Cross Member	38A—34	2	
C.11920	**Bolt** (Short) securing Steering Box to Front Suspension Cross Member	38A—35	2	
C.11958	**Tab Washer,** locking Bolts	38A—36	2	

SECTION 36A

STEERING UNIT

Part No.	Description	Plate No.	No. per Unit	Remarks
C.13740	**STONEGUARD AT TOP OF STEERING BOX**	38A—37	1	**R.H. DRIVE CARS ONLY**
C.13739	**STONEGUARD AT TOP OF STEERING BOX**		1	**L.H. DRIVE CARS ONLY**
FW.105/T	**Washer,** Plain, at fixings of Stoneguard		1	

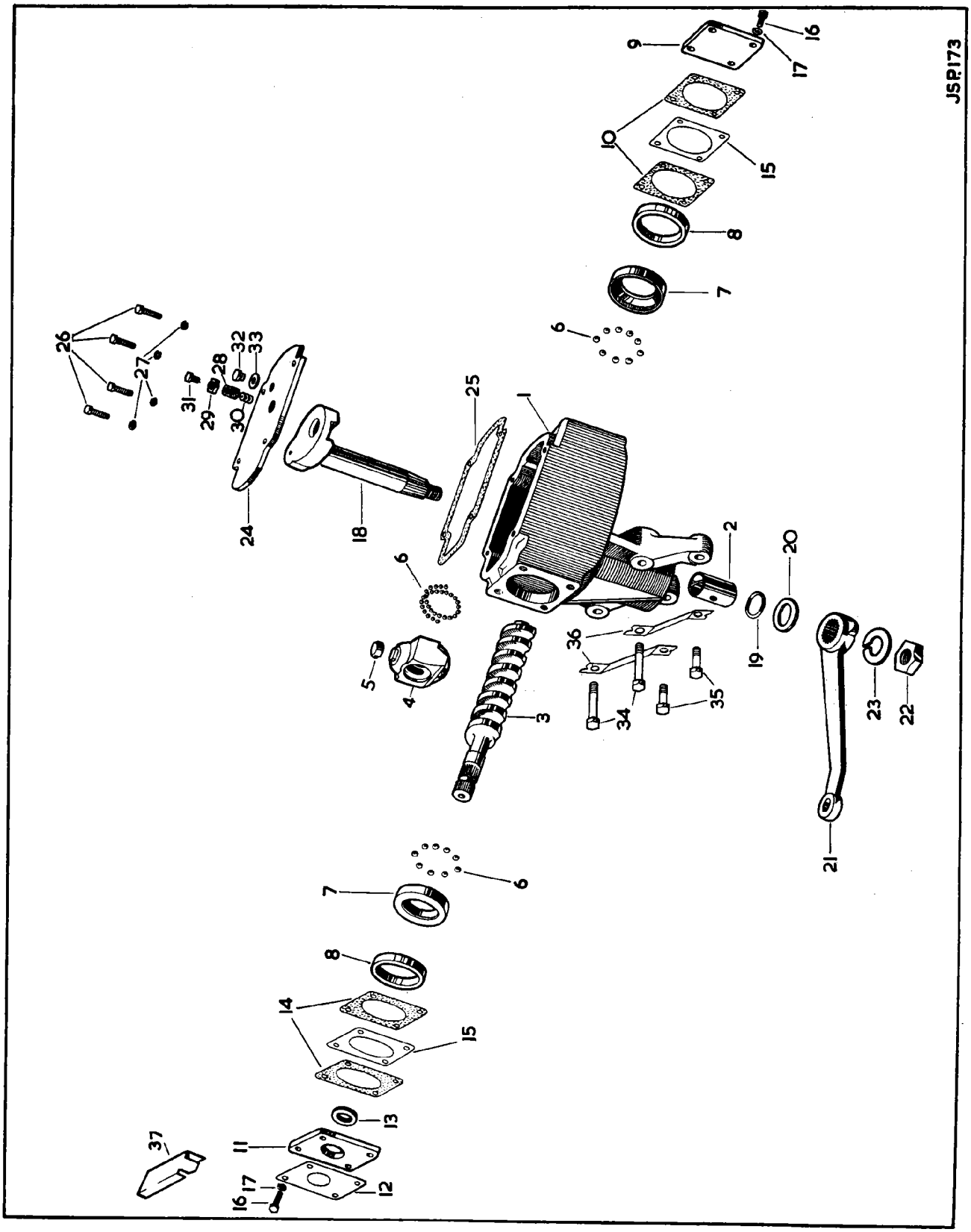
JSR173
1
2
3
4
5
6
7
8
9
10
11
12
13
14
15
16
17
18
19
20
21
22
23
24
25
26
27
28
29
30
31
32
33
34
35
36
37

PLATE 38A

STEERING UNIT
(HIGH RATIO)

Part No.	Description	Plate No.	No. per Unit	Remarks
C.8927	**STEERING BOX ASSEMBLY COMPLETE (SF.211) (RATIO 17.6 : 1)**		1	**SUPPLIED TO SPECIAL ORDER FOR R.H. DRIVE CARS ONLY**
6407	**Steering Box** only (S.1-80)	38B—1	1	
6409	**Trunnion Bush,** at bottom of Steering Box (19-9-5)	38B—2	1	
6412	**Inner Column Worm** (S.3-167)	38B—3	1	
6420	**Main Nut** (complete with Transfer Tube but less Steel Balls) (S.2-30)	38B—4	1	
146	**Roller,** on Spigot of Main Nut, for Guide Slot in Cover Plate (24-5-1)	38B—5	1	
137	**Steel Ball,** around Main Nut and Inner Column Worm (17-4-1)	38B—6	30	
6411	**Washer,** seating Steel Balls, at each end of Inner Column Worm (12-8-32)	38B—7	2	
6410	**Ball Race** (Adjustable) at each end of Inner Column Worm (5-23-10)	38B—8	2	
6419	**End Plate,** at bottom of Steering Box (S.11-38)	38B—9	1	
6414	**Gasket,** between Lower End Plate and Steering Box (S.10-15) (.003" thick)	38B—10	As req'd	
6416	**End Plate,** at upper end of Steering Box (adjacent to Splined end of Inner Column Worm) (S.11-43)	38B—11	1	
7696	**Plate,** retaining Oil Seal in End Plate (S.10-99)	38B—11A	1	
6415	**Oil Seal,** In Upper End Plate, for Inner Column Worm (27-8-20)	38B—12	1	
6417	**Gasket,** between Upper End Plate and Steering Box (S.10-42) (.003" thick)	38B—13	As req'd	
6418	**Shim,** under End Plates, for adjustment of end float on Inner Column Worm (S.10-14) (.005" thick)	38B—14	As req'd	
UCS.131/7R	**Screw,** Set, securing End Plates to Steering Box	38B—15	8	
FG.105/X	**Washer,** Spring, on Setscrews	38B—16	8	
6422	**Rockershaft** (S.7-44)	38B—17	1	
6427	**'O' Ring,** at bottom of Steering Box, for Rockershaft (27-9-5)	38B—18	1	
6428	**Washer,** retaining 'O' Ring in Steering Box (12-9-2)	38B—19	1	
6429	**Drop Arm,** on Rockershaft (S.9-96)	38B—20	1	
UFN.275/L	**Nut,** securing Drop Arm to Rockershaft	38B—21	1	
6430	**Washer,** Spring, under Nut (12-8-22)	38B—22	1	
6424	**Cover Plate,** at top of Steering Box (S.12-12)	38B—23	1	
6423	**Gasket,** under Cover Plate (S.10-16)	38B—24	1	
UCS.131/8R	**Screw,** Set, securing Cover Plate to Steering Box	38B—25	4	
FG.105/X	**Washer,** Spring, on Setscrews	38B—26	4	
6426	**Screw,** in Cover Plate, for Adjustment of Rockershaft (25-7-2)	38B—27	1	
UFN.262/L	**Nut,** locking Adjusting Screw	38B—28	1	
144	**Oil Filler Plug,** in Cover Plate (21-7-2)	38B—29	1	
C.2296/5	**Washer,** under Filler Plug	38B—30	1	
C.8928	**STEERING BOX ASSEMBLY COMPLETE (SF.212) (RATIO 17.6 : 1)**		1	**SUPPLIED TO SPECIAL ORDER FOR L.H. DRIVE CARS ONLY**
6408	**Steering Box only** (S.1-79)		1	
6413	**Inner Column Worm** (S.3-168)		1	
6421	**Main Nut** (complete with Transfer Tube but less Steel Balls) (S.2-31)		1	
6425	**Cover Plate,** at top of Steering Box (S.12-13)		1	
	All other items are as for Steering Box C.8927			
C.11919	**Bolt** (long) securing Steering Box to Front Suspension Cross Member	38B—31	2	
C.11920	**Bolt** (short) securing Steering Box to Front Suspension Cross Member	38B—32	2	
C.11958	**Tab Washer,** locking Bolts	38B—33	2	

SECTION 36B

STEERING UNIT

(HIGH RATIO)

Part No.	Description	Plate No.	No. per Unit	Remarks
C.13740	**STONEGUARD AT TOP OF STEERING BOX**	38B—34	1	**R.H. DRIVE CARS ONLY**
C.13739	**STONEGUARD AT TOP OF STEERING BOX**		1	**L.H. DRIVE CARS ONLY**
FW.105/T	**Washer,** Plain, at fixings of Stoneguard		1	

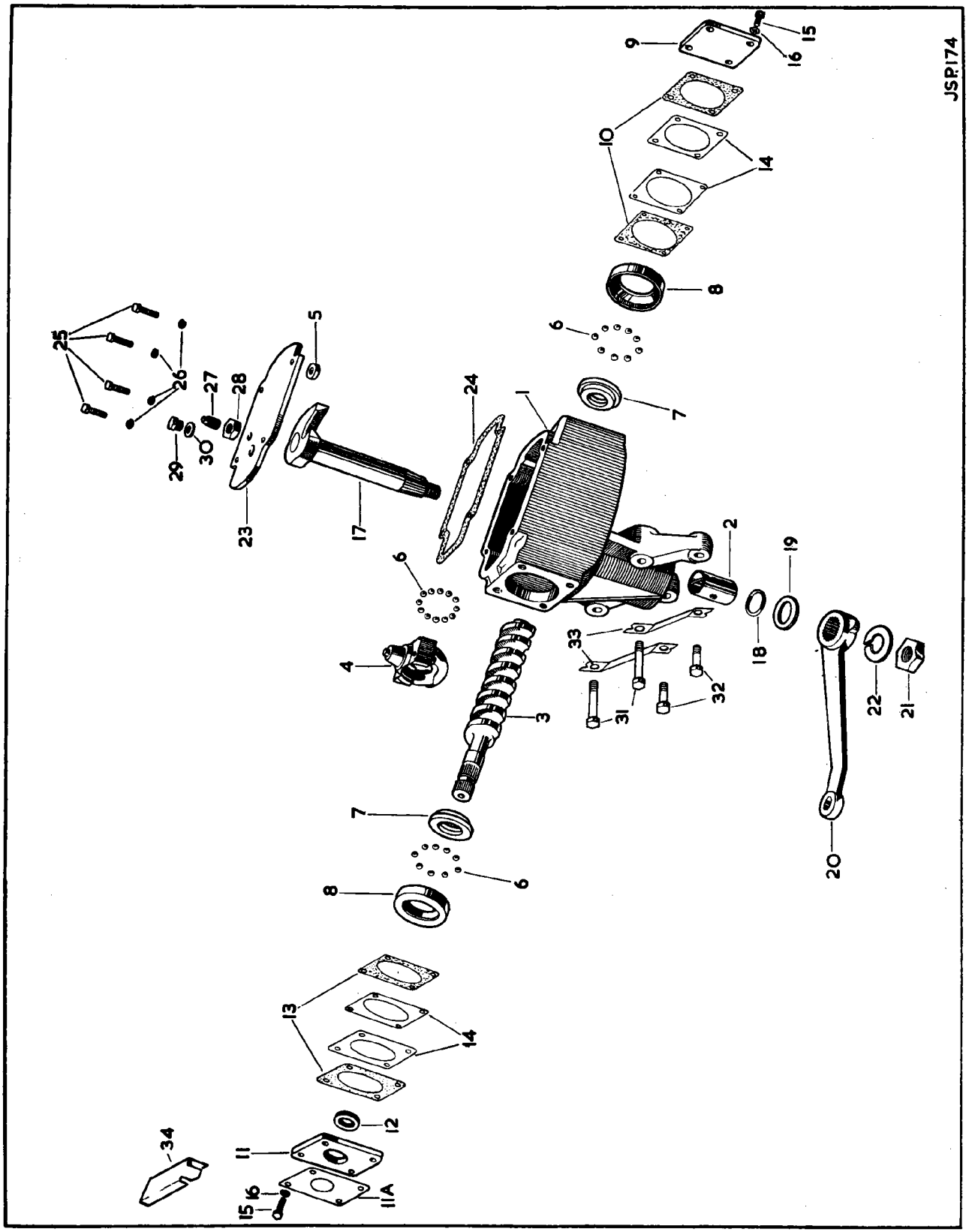
JSP174
1
2
3
4
5
6
7
8
9
10
11
11A
12
13
14
15
16
17
18
19
20
21
22
23
24
25
26
27
28
29
30
31
32
33
34

PLATE 38B

P. A. STEERING PUMP AND HYDRAULICS

Part No.	Description	Plate No.	No. per Unit	Remarks
C.23033	**OIL PUMP ASSEMBLY (5692776)**		1	
10976	**Reservoir Assembly** (5693178)	39—1	1	
10977	**Filler Cap Assembly** (5691913)	39—2	1	
10978	**Stud,** securing Reservoir to Pump Body and mounting Pump Assembly (5689546)	39—3	2	
10979	**Outlet Union,** securing Reservoir to Pump Body (5690428)	39—4	1	
N.S.S.	'O' Ring, on Outlet Union (5688035)	39—5	1	NOT SUPPLIED SEPARATELY. USE SEALS KIT 10992
N.S.S.	Seal, Small, between Reservoir and Pump Body (5688109)	39—6	2	
N.S.S.	Seal, large, between Reservoir and Pump Body (5688049)	39—7	1	
10980	**Pump Body Assembly** (5693251)	39—8	1	
N.S.S.	'O' Ring, around Pump Body (5688015)	39—9	1	NOT SUPPLIED SEPARATELY. USE SEALS KIT 10992
10981	**Shaft,** driving Oil Pump (5690431)	39—10	1	
10982	**Key,** locating Pulley on Shaft (5687898)	39—11	1	
10983	**Thrust Plate,** under Rotor (5688027)	39—12	1	
N.S.S.	Rotor (5687278)	39—13	1	NOT SUPPLIED SEPARATELY. USE REPAIR KIT 10993 OR 10994 (VANES ONLY)
N.S.S.	Clip, retaining Thrust Plate and Rotor to Shaft (5691053)	39—14	1	
N.S.S.	Pump Vane (5686689)	39—15	10	
N.S.S.	Pump Ring (5688881)	39—16	1	
10984	**Pressure Plate** (5688879)	39—17	1	
10985	**Pin,** locating Thrust Plate, Pump Ring, and Pressure Plate in Pump Body (5691490)	39—18	2	
10986	**Spring,** behind Pump Pressure Plate (5688877)	39—19	1	
10987	**End Plate,** for Oil Pump (5691489)	39—20	1	
10988	**Clip,** securing End Plate (5688014)	39—21	1	
N.S.S.	'O' Ring, in Pump Body, sealing Pressure Plate and Retaining Plate (5688034)	39—22	2	NOT SUPPLIED SEPARATELY. USE SEALS KIT 10992
10989	**Flow Control Valve Assembly** (5691948)	39—23	1	
10990	**Spring,** under Valve (5688037)	39—24	1	
10980	**PUMP BODY ASSEMBLY (5693251)**	39—8	1	
10991	**Oil Seal,** for Shaft (5688020)	39—25	1	
10992	**SEALS KIT FOR OIL PUMP (5688044)**		1	
10993	**REPAIR KIT FOR OIL PUMP (5688890)**		1	
	(COMPRISING ROTOR, CLIP, PUMP VANES, AND PUMP RING)			
10994	**VANES KIT (5686719)**		1	
C.26897	**BRACKET, MOUNTING OIL PUMP**	39—26	1	
C.23368	**Bolt Assembly,** pivoting Pump Bracket in R.H. Front Engine Mounting Bracket	39—27	1	
UFN.143/L	**Nut,** on Pivot Bolt		1	
FG.107/X	**Washer,** Spring, under Nut		1	
UCN.137/L	**Nut,** securing Oil Pump to Bracket		2	
FG.106/X	**Washer,** Spring, under Nuts		2	

SECTION 37

P. A. STEERING PUMP AND HYDRAULICS

Part No.	Description	Plate No.	No. per Unit	Remarks
C.23367	**ADJUSTING LINK FOR OIL PUMP**	39—28	1	
UCS.137/5R	**Screw,** Set, securing Adjusting Link to Water Pump and Oil Pump		2	
FG.106/X	**Washer,** Spring, on Setscrews		2	
FW.106/T	**Washer,** Plain, under Spring Washer at fixing of Link to Oil Pump		1	
C.23133	**PULLEY FOR OIL PUMP**	39—29	1	
UFN.256/L	**Nut,** securing Pulley to Pump Shaft	39—30	1	
C.2151	**Tab Washer,** locking Nut	39—31	1	
C.27026	**HIGH PRESSURE HOSE, FROM UNION ON OIL PUMP TO FORWARD UNION ON STEERING BOX**	39—32	1	R.H. DRIVE CARS ONLY
C.27027	**LOW PRESSURE HOSE, FROM REAR UNION ON STEERING BOX TO RETURN CONNECTION ON OIL PUMP RESERVOIR**	39—33	1	R.H. DRIVE CARS ONLY
C.2905/1	**Clip,** securing Low Pressure Hose to Oil Pump Reservoir	39—34	1	R.H. DRIVE CARS ONLY
C.27028	**HIGH PRESSURE PIPE ASSEMBLY FROM UNION ON OIL PUMP TO LOWER UNION ON STEERING BOX**	39—35	1	L.H. DRIVE CARS ONLY
C.27029	**LOW PRESSURE PIPE ASSEMBLY FROM UPPER UNION ON STEERING BOX TO RETURN CONNECTION ON OIL PUMP RESERVOIR**	39—36	1	L.H. DRIVE CARS ONLY
C.29051/1	**Clip,** securing Low Pressure Pipe to Oil Pump Reservoir	39—37	1	L.H. DRIVE CARS ONLY
C.26406	**Bracket,** on Steering Idler Fixing Bolts, anchoring Pipes	39—38	1	L.H. DRIVE CARS ONLY
C.26407	**Clip,** securing Pipes to Bracket	39—39	1	L.H. DRIVE CARS ONLY
UFS.119/5R	**Screw,** Set, through Clip		1	L.H. DRIVE CARS ONLY

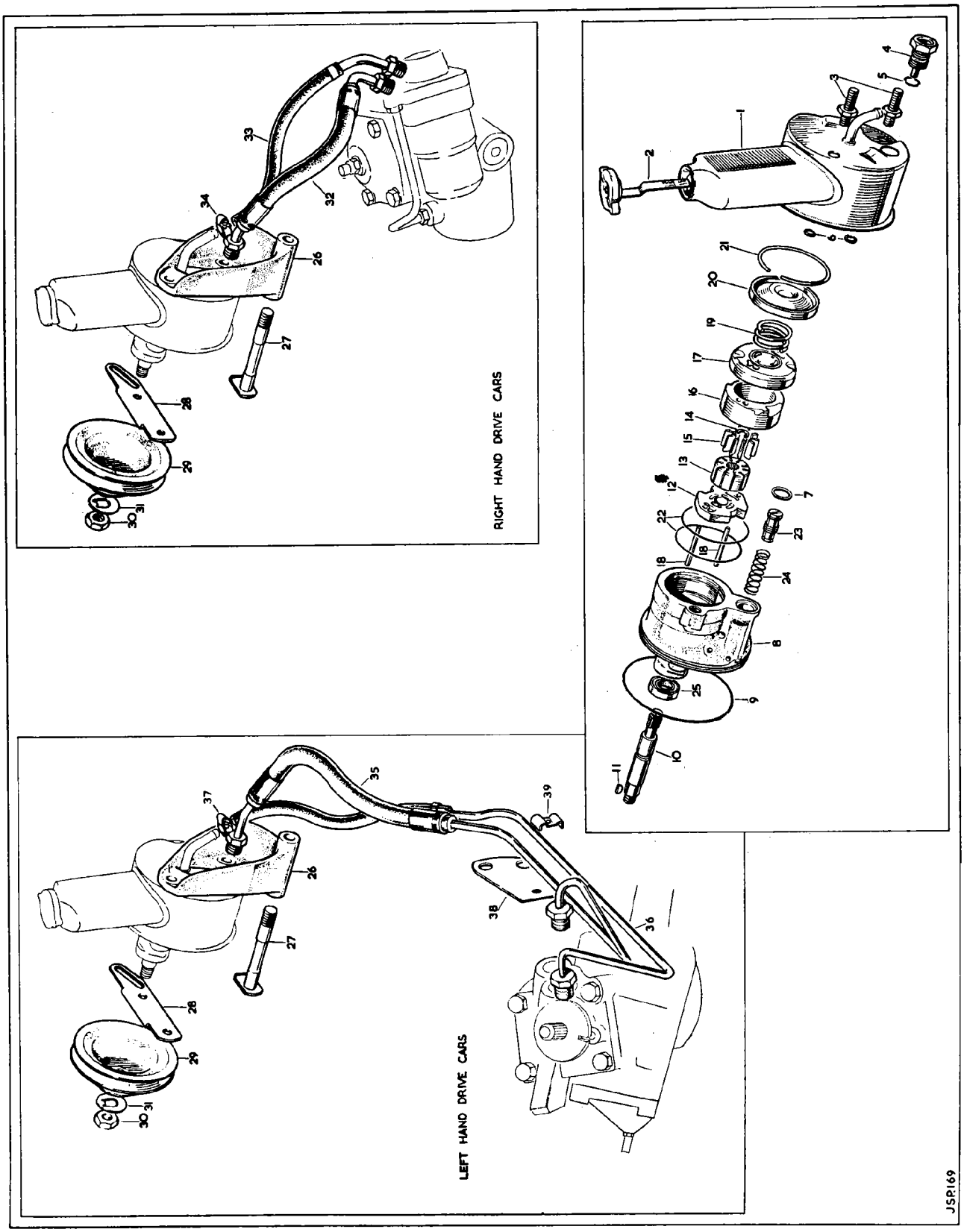

PLATE 39

SECTION 38

STEERING COLUMN

Part No.	Description	Plate No.	No. per Unit	Remarks
C.27601	**UPPER STEERING COLUMN ASSEMBLY**		1	**NOT REQUIRED FOR CARS FITTED WITH AUTOMATIC TRANSMISSION**
C.27602	**Outer Tube Assembly**	40—1	1	
C.23593	**Bearing** (Elastollan) at top of Outer Tube	40—2	1	
C.23592	**Bearing** (Elastollan) at bottom of Outer Tube	40—3	1	
C.27605	**Inner Column**	40—4	1	
C.20163	**Shaft,** inside Inner Column, for attachment of Steering Wheel	40—5	1	
C.16676	**Stop Button,** restricting movement of Shaft	40—6	1	
C.15419	**Locknut,** clamping Shaft to Inner Column	40—7	1	
8671	**Split Collet,** inside Locknut (complete with Circlip)	40—8	1	
C.18235	**Circlip** (supplied with Split Collet)	40—9	1	
C.27603	**UPPER STEERING COLUMN ASSEMBLY**		1	**REQUIRED ONLY FOR CARS FITTED WITH AUTOMATIC TRANSMISSION**
C.27604	**Outer Tube Assembly**		1	
	All other items are as for Upper Steering Column Assembly C.27601			
C.22450	**LOCK AND IGNITION SWITCH ASSEMBLY ON STEERING COLUMN**	40—10	1	**FITTED AS STANDARD EQUIPMENT ON CARS EXPORTED TO GERMANY AND SWEDEN. ALSO SUPPLIED TO SPECIAL ORDER**
11242	**Switch Assembly only**		1	
11243	**Screw,** securing Switch		3	
C.26251	**BRACKET, UPPER, MOUNTING UPPER STEERING COLUMN TO DASH**	40—11	1	
UFS.125/4R	**Screw,** Set, securing Bracket		4	
C.724	**Washer,** Shakeproof, on Setscrews		4	
C.17754	**SCREW PLATE ASSEMBLY, FIXING UPPER STEERING COLUMN TO BRACKET**	40—12	1	
C.17753	**Spacer,** at upper fixing of Upper Column	40—13	As req'd	
C.16370	**Shim,** between Spacer and Upper Bracket, adjusting Upper Column	40—14	As req'd	
UFN.131/L	**Nut,** securing Upper Column to Bracket		2	
FG.105/X	**Washer,** Spring, under Nuts		2	
FW.105/T	**Washer,** Plain, under Spring Washers		2	
BD.12010	**BRACKET ASSEMBLY, LOWER, MOUNTING UPPER STEERING COLUMN**	40—15	1	
BD.27497	**Gasket,** under Lower Mounting Bracket	40—16	1	
UFS.125/4R	**Screw,** Set, securing Lower Mounting Bracket to Dash		4	
C.724	**Washer,** Shakeproof, on Setscrews		4	
C.2905/4	**Clip,** securing Upper Column in Bracket	40—17	1	
C.7878	**SPLIT CONE, ON INNER COLUMN SHAFT, SEATING STEERING WHEEL**	40—18	2 halves	

STEERING COLUMN

Part No.	Description	Plate No.	No. per Unit	Remarks
C.18758	**STEERING WHEEL**	40—19	1	
C.7879	**Nut,** securing Steering Wheel to Inner Column Shaft	40—20	1	
C.15885	**Washer,** Special, under Nut	40—21	1	
C.11820/7	**Palnut,** locking Nut	40—22	1	
C.11746	**EARTH CONTACT, FOR OPERATION OF HORN (348313)**	40—23	1	
UCS.313/3H	**Screw,** Set, securing Earth Contact to Bracket on Upper Column Outer Tube		1	
UCN.113/L	**Nut,** on Setscrew		1	
C.721	**Washer,** Shakeproof, under Nut		1	
C.15665	**HORN SLIP RING ASSEMBLY ON INNER COLUMN (348252/B)**		1	
C.10317	**Slip Ring only** (348276)	40—24	1	
C.15666	**Cable,** complete with Contact (54944464)	40—25	1	
C.10319	**Rotor,** bottom half (348275)	40—26	1	**Supplied only in pairs to Part No. 8295 (54300638)**
C.10320	**Rotor,** top half (348274)	40—27	1	
C.8761	**Contact,** for Cable (348266)	40—28	1	
C.8156	**Spring,** inside top half of Rotor (348267)	40—29	1	
C.15666	**CABLE ASSEMBLY FOR HORN SLIP RING (54944464)**	40—25	1	
8974	**Conical Spring,** at top of Cable (331006)		1	
8975	**Plain Washer,** at top of Conical Spring (132384)		1	
8976	**Insulating Bush,** under Conical Spring (54300436)		1	
8977	**Circlip,** retaining Conical Spring on Cable (154324)		1	
C.8157	**CONTACT ASSEMBLY FOR HORN SLIP RING (348262/A)**		1	
C.8158	**Contact Holder** (348269)	40—30	2	
C.8159	**Contact** (348268)	40—31	1	
C.8161	**Bolt,** securing Contact to Holder (136444)	40—32	1	
C.8160	**Nut,** on Bolt (348270)	40—33	1	
C.13024	**Insulating Strip** (Fibre) protecting Contact from above (348486)	40—34	1	
C.12194	**Dowler Eyelet,** for Horn Contact (188818)	40—35	1	
C.25555	**DIRECTION INDICATOR/HEADLAMP FLASHER SWITCH (35532/B-131.SA)**	40—36	1	
C.25668	**Insulating Strip,** protecting Switch Contacts	40—37	1	
BD.22686	**Stud,** securing Insulating Strip	40—38	2	
C.26025	**CLAMP, ON DIRECTION INDICATOR SWITCH FIXING SCREWS, ADJUSTING UPPER COLUMN TOP BEARING**	40—39	1	
C.26023/1	**Spacer,** at upper end of Clamp (.188" thick)	40—40	1	**SELECTIVE SIZES**
C.26023/2	**Spacer,** at upper end of Clamp (.160" thick)	40—40	1	
UFN.119/L	**Nut,** locking Clamp	40—41	1	

SECTION 38

STEERING COLUMN

Part No.	Description	Plate No.	No. per Unit	Remarks
C.25538	**DRIVE CLIP, FOR STRIKER RING ON DIRECTION INDICATOR SWITCH**	40—42	1	
C.14007/1	**Screw,** Set, securing Drive Clip		2	
C.723/A	**Washer,** Shakeproof, on Setscrews		2	
C.23008	**Washer,** Special, under Shakeproof Washers		2	
C.16792	**UPPER SWITCH COVER ASSEMBLY AT CENTRE OF STEERING WHEEL (WITH "JAGUAR" MOTIF)**		1	FOR CARS FITTED WITH STANDARD TRANSMISSION
C.20794	**LOWER SWITCH COVER AT CENTRE OF STEERING WHEEL**		1	
C.25925	**UPPER SWITCH COVER ASSEMBLY AT CENTRE OF STEERING WHEEL (WITH INDICATOR INSCRIBED "OVERDRIVE")**	40—43	1	FOR CARS FITTED WITH OVERDRIVE TRANSMISSION
C.20793	**LOWER SWITCH COVER AT CENTRE OF STEERING WHEEL**	40—44	1	
C.25117	**UPPER SWITCH COVER ASSEMBLY AT CENTRE OF STEERING WHEEL (WITH INDICATOR INSCRIBED "P R N D2 D1 L")**		1	FOR CARS FITTED WITH AUTOMATIC TRANSMISSION
C.20792	**LOWER SWITCH COVER, AT CENTRE OF STEERING WHEEL**		1	
C.16460	**Screw,** Set, Clamping Upper and Lower Covers together		2	
C.15830	**Washer,** Plain, on Setscrews		2	
BD.13713/2	**Screw,** Set, securing Lower Switch Cover to Steering Column		3	
C.15830	**Washer,** Plain, on Setscrews		3	
C.27639	**LOWER STEERING COLUMN ASSEMBLY (01/502712)**		1	NOT REQUIRED WHEN POWER-ASSISTED STEERING IS FITTED
C.27674	**Lower Column Sub-Assembly** (01/502713)	40—45	1	
UFB.131/14R	**Bolt,** securing Lower Universal Joint to Steering Box	40—46	1	
C.8737/2	**Nut,** Self-Locking, on Bolt	40—47	1	
C.27370	**Coupling** (Rubber) between Lower Column Sub-Assembly and Universal Joint	40—48	1	WHEN RENEWING THIS ITEM, IT IS ADVISABLE TO FIT NEW BOLTS, WASHERS, AND PALNUTS
C.27369	**Bolt,** securing Coupling to Lower Column and Universal Joint	40—49	4	
FW.105/T	**Washer,** Plain, under head of Bolts	40—50	4	
C.11820/3	**Palnut,** locking Bolts	40—51	4	
C.27373	**Universal Joint Assembly,** at upper end of Lower Steering Column (01/502646)	40—52	1	
C.27368	**Steady Bush** (Rubber) in Flange of Upper Universal Joint	40—53	1	

Part No.	Description	Plate No.	No. per Unit	Remarks
	LOWER STEERING COLUMN ASSEMBLY (cont'd)			
UFB.131/14R	**Bolt,** securing Upper Universal Joint to Inner Steering Column	40—54	1	
C.8737/2	**Nut,** Self-Locking, on Bolt	40—55	1	
C.27642	**LOWER STEERING COLUMN ASSEMBLY (01/502725)**		1	**FOR R.H. DRIVE CARS FITTED WITH POWER-ASSISTED STEERING**
C.27676	**Lower Column Sub-Assembly** (01/502722)		1	
UFB.131/11R	**Bolt,** securing Lower Universal Joint to Steering Box		1	
C.16518	**Nut,** Self-locking, on Bolt		1	
	All other items are as for Lower Steering Column C.27639			
C.27641	**LOWER STEERING COLUMN ASSEMBLY (01/502724)**		1	**FOR L.H. DRIVE CARS FITTED WITH POWER-ASSISTED STEERING**
C.27675	**Lower Column Sub-Assembly** (01/502721)		1	
	All other items are as for Lower Steering Column C.27639			
	NOTE : ON SOME EARLY CARS, THE END YOKE PINCH BOLTS OF THE LOWER STEERING COLUMN ARE AT AN ANGLE OF 45° TO EACH OTHER. WHEN FITTING LOWER STEERING COLUMN C.27639, C.27641, OR C.27642 TO SUCH A CAR, IT WILL BE NECESSARY TO RE-ALIGN THE STEERING WHEEL AND DIRECTION INDICATOR SWITCH STRIKER DRIVE CLIP IN ACCORDANCE WITH THE INSTRUCTIONS IN SERVICE BULLETIN 1.27.			
C.27674	**LOWER COLUMN SUB-ASSEMBLY (01/502713)**	40—45	1	**NOT REQUIRED WHEN POWER-ASSISTED STEERING IS FITTED**
9612	**End Yoke,** for Universal Joint (01/206012)	40—56	1	
5426	**Journal Assembly,** for Universal Joint (01/500582)	40—57	1	
C.27676	**LOWER COLUMN SUB-ASSEMBLY (01/502722)**		1	**FOR R.H. DRIVE CARS FITTED WITH POWER-ASSISTED STEERING**
10061	**End Yoke,** for Universal Joint (01/206163)		1	
5426	**Journal Assembly,** for Universal Joint (01/500582)		1	
C.27675	**LOWER COLUMN SUB-ASSEMBLY (01/502721)**		1	**FOR L.H. DRIVE CARS FITTED WITH POWER-ASSISTED STEERING**
10762	**End Yoke,** for Universal Joint (01/206175)		1	
5426	**Journal Assembly,** for Universal Joint (01/500582)		1	
C.27373	**UNIVERSAL JOINT ASSEMBLY AT UPPER END OF LOWER STEERING COLUMN (01/502646)**	40—52	1	
11449	**Flange Yoke Assembly** (01/206324)	40—58	1	
9612	**End Yoke,** for Universal Joint (01/206012)	40—59	1	
5426	**Journal Assembly,** for Universal Joint (01/500582)	40—60	1	

SECTION 38

STEERING COLUMN

Part No.	Description	Plate No.	No. per Unit	Remarks
C.16512	**SHIELD ASSEMBLY, PROTECTING STEERING COLUMN RUBBER COUPLING FROM EXHAUST HEAT**	40—61	1	
C.16450	**Bracket Assembly,** on Exhaust Manifold Outlet Flange Studs, mounting Shield	40—62	1	**L.H. DRIVE CARS ONLY**
UFN.119/L	**Nut,** securing Shield to Bracket		2	
C.723/A	**Washer,** Shakeproof, under Nuts		2	
AW.102/T	**Washer,** Plain, under Shakeproof Washers		2	

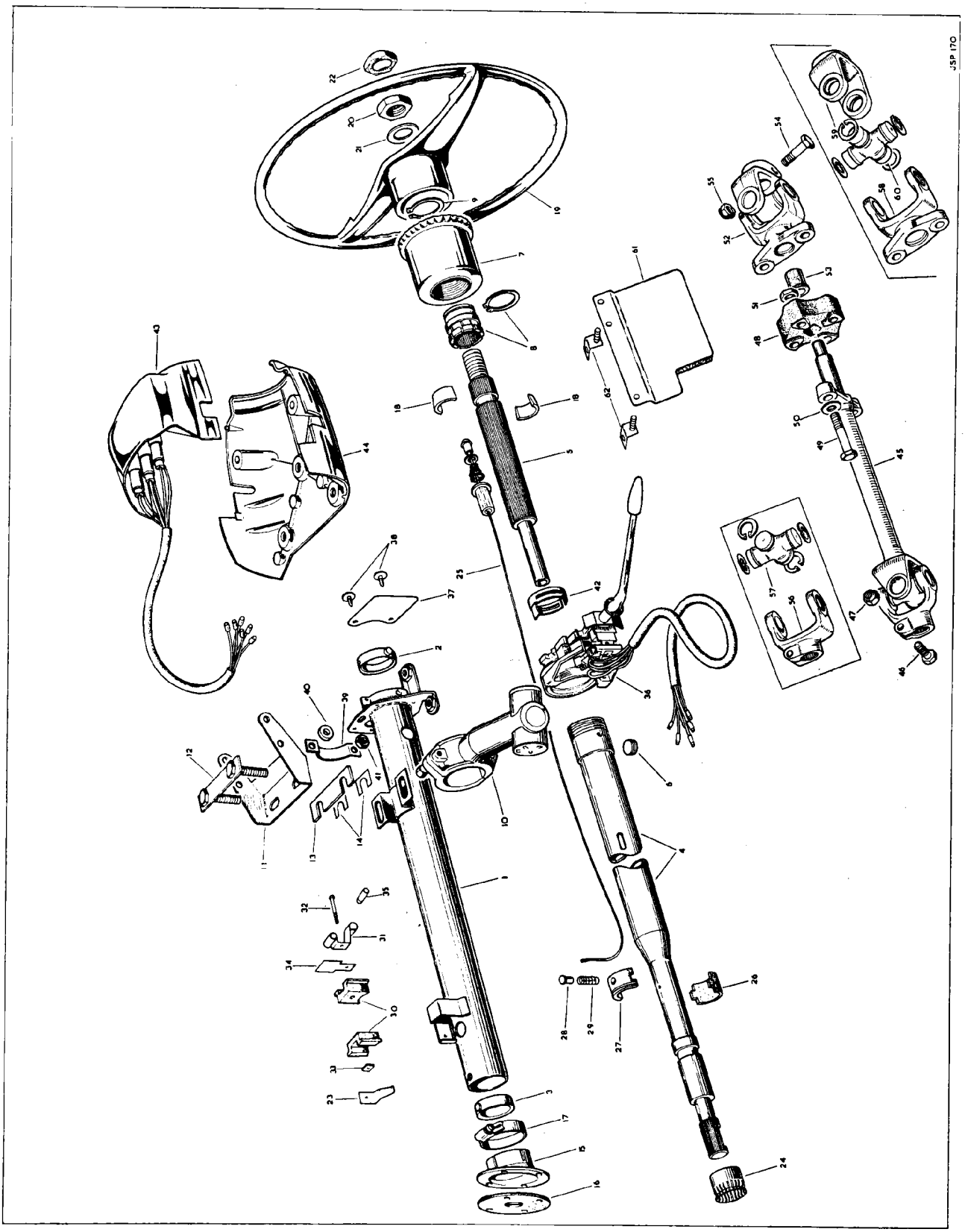

PLATE 40

Part No.	Description	Plate No.	No. per Unit	Remarks
C.26930	**R.H. FRONT CALIPER ASSEMBLY (64032479)**	29—1	1	
11365	**Outer Piston** (64325809)	29—2	2	
11366	**Inner Piston** (64325438)	29—3	1	
N.S.S.	**Seal,** for Outer Pistons (64326074)	29—4	2	NOT SUPPLIED SEPARATELY. USE SEALS KIT 11371 (SP.2511)
N.S.S.	**Dust Seal,** for Outer Pistons (64326296)	29—5	1	
N.S.S.	**Seal,** for Inner Piston (64326075)	29—6	1	
N.S.S.	**Dust Seal,** for Inner Pistons (64325092)	29—7	1	
11367	**Friction Pad Kit** (64325750/DX)	29—8	1	SET OF 4 PADS
11368	**Pin,** retaining Friction Pads (64325022)	29—9	2	
11369	**Clip,** retaining Pins (64325009)	29—10	2	
11370	**Bleed Screw** (64470445)	29—11	1	
1675	**Dust Cap,** on Bleed Screw (363400)	29—12	1	
C.26931	**L.H. FRONT CALIPER ASSEMBLY (64032478)**		1	
	Individual items are as for C.26930			
11371	**SEALS KIT FOR FRONT CALIPERS (SP.2511)**		1	
	Comprising:-			
	Seal, for Outer Pistons — 4 off			
	Dust Seal, for Outer Pistons — 2 off			
	Seal, for Inner Pistons — 2 off			
	Dust Seal, for Inner Pistons — 2 off			
	Dust Cap, for Bleed Screws — 2 off			
C.26932	**Bolt,** securing Front Calipers and Upper Disc Shields to Stub Axle Carriers		2	
FG.107/X	**Washer,** Spring, on Bolts		2	
FW.107/T	**Washer,** Plain, under Spring Washers		2	
C.27176	**Bolt,** securing Front Calipers and Tie Rod Levers to Stub Axle Carriers		2	
FG.107/X	**Washer,** Spring, on Bolts		2	
C.27177/1	**Shim** (.004" thick) between Calipers and Tie Rod Levers	29—13	As req'd	SELECTIVE SIZES
C.27177/2	**Shim** (.010" thick) between Calipers and Tie Rod Levers	29—13	As req'd	
C.27177/3	**Shim** (.030" thick) between Calipers and Tie Rod Levers	29—13	As req'd	
C.837	**Wire,** locking Caliper Bolts		As req'd	
C.27024	**DISC ASSEMBLY FOR FRONT BRAKE CALIPERS**	29—14	2	
C.13546	**Bolt,** securing Discs to Hubs		10	
C.24119/4	**Nut,** Self-locking, on Bolts		10	
C.26933	**SHIELD ASSEMBLY, UPPER, FOR R.H. FRONT BRAKE DISC**	29—15	1	
C.26934	**SHIELD ASSEMBLY, UPPER, FOR L.H. FRONT BRAKE DISC**		1	
UFS.143/6R	**Screw,** Set, securing Upper and Lower Disc Shields to Stub Axle Carriers		2	
FG.107/X	**Washer,** Spring, on Setscrews		2	

SECTION 27

FRONT BRAKES

Part No.	Description	Plate No.	No. per Unit	Remarks
C.26937	**SHIELD, LOWER, FOR R.H. FRONT BRAKE DISC**	29—16	1	
C.26938	**SHIELD, LOWER, FOR L.H. FRONT BRAKE DISC**		1	
C.23723	**Clip,** securing Lower Disc Shields to Stub Axle Carriers	29—17	4	
C.8737/1	**Nut,** securing Clips		4	

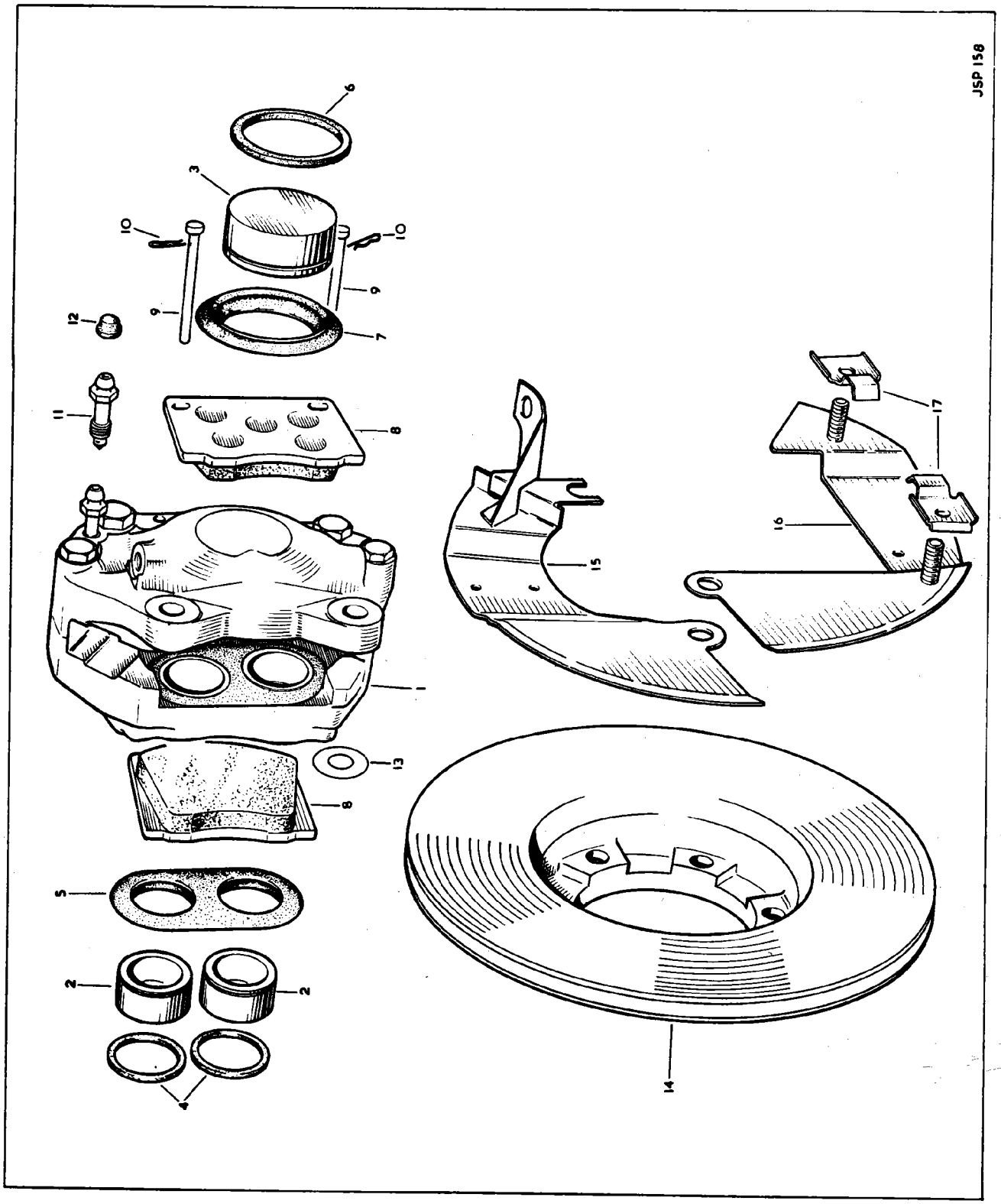

PLATE 29

REAR BRAKES

Part No.	Description	Plate No.	No. per Unit	Remarks
C.27119	**R.H. REAR CALIPER ASSEMBLY (64032667)**	30—1	1	
11372	**Piston** (64325436)	30—2	2	
N.S.S.	**Seal,** for Pistons (64326112)	30—3	2	**NOT SUPPLIED SEPARATELY. USE SEALS KIT 11376 (SP.2505)**
N.S.S.	**Dust Seal,** for Pistons (64325069)	30—4	2	
11373	**Friction Pad Kit** (64325738/DX)	30—5	1	**SET OF 4 PADS**
11368	**Pin,** retaining Friction Pads (64325022)	30—6	2	
11369	**Clip,** retaining Pins (64325009)	30—7	2	
11374	**Bridge Pipe Assembly** (64476853)	30—8	1	
11375	**Bleed Screw** (64470444)	30—9	1	
1675	**Dust Cap,** on Bleed Screw (363400)	30—10	1	
C.27118	**L.H. REAR CALIPER ASSEMBLY (64032666)**		1	
	Individual items are as for R.H. Rear Caliper Assembly C.27119			
11376	**SEALS KIT FOR REAR CALIPERS (SP.2505)**		1	
	Comprising:- **Seal,** for Pistons 4 off **Dust Seal,** for Pistons 4 off **Dust Cap,** for Bleed Screws 2 off			
C.1919/2	**Distance Piece,** at fixings of Rear Calipers to Adaptor Plates	30—11	4	
C.13198	**Shim** (.005" thick) between Distance Pieces and Adaptor Plates, for adjustment of Rear Calipers	30—12	As req'd	**SELECTIVE SIZES**
C.13199	**Shim** (.020" thick) between Distance Pieces and Adaptor Plates, for adjustment of Rear Calipers	30—12	As req'd	
C.26981	**Bolt,** securing Rear Calipers to Adaptor Plates		4	
FG.107/X	**Washer,** Spring, on Bolts		4	
C.21126	**Wire,** locking Bolts		As req'd	
C.22859	**ADAPTOR PLATE FOR REAR CALIPERS**	30—13	2	
C.22726	**HANDBRAKE MECHANISM ASSEMBLY R.H. (VBM.4272/A OR 64932082/HX)**	30—14	1	**R.H. DRIVE CARS ONLY**
10125	**Pad Carrier Assembly,** R.H. Inner (VBM.5347/A or 64328415/HX)	30—15	1	
9328	**Pad Carrier Assembly,** R.H. Outer (VBO.8235/A or 64328182/HX)	30—16	1	
8938	**Anchor Pin,** for Return Spring (VBO.8157 or 64328042)	30—17	1	
10126	**Operating Lever Assembly** (VBO.9948 or 64328421)	30—18	1	
8940	**Return Spring** (VBO.8190 or 64328056)	30—19	1	
8836	**Pawl** Assembly (VBO.7995 or 64328051)	30—20	1	
8837	**Tension Spring,** for Pawl (VBO.7367 or 64328052)	30—21	1	
8838	**Anchor Pin,** for Tension Spring (VBO.7385 or 64328053)	30—22	1	
8980	**Adjusting Nut** (VBO.7667 or 64328054)	30—23	1	
8840	**Friction Spring,** on Adjusting Nut (VBO.7588 or 64328055)	30—24	1	
8841	**Hinge Pin,** securing Operating Lever (VBO.7289 or 64328075)	30—25	1	
L.102/4U	**Split Pin,** through Hinge Pin	30—26	1	

SECTION 28

REAR BRAKES

Part No.	Description	Plate No.	No. per Unit	Remarks
	HANDBRAKE MECHANISM ASSEMBLY R.H. (cont'd)			
9334	**Protection Cover Assembly,** outer (VBO.8467 or 64328077)	30—27	1	
9335	**Protection Cover,** inner (VBO.8215 or 64328080)	30—28	1	
9336	**Bolt,** securing Protection Covers (VBO.6015/G or 64130921)	30—29	1	
BD.2906/3	**Washer,** Shakeproof, on Bolt (VBO.6100/D or 64140361)	30—30	1	
9749	**Bolt,** securing Pad Carriers to Operating Lever (VBO.8805 or 64328114)	30—31	1	
L.102.5/10U	**Split Pin,** retaining Bolt	30—32	1	
C.22727	**HANDBRAKE MECHANISM ASSEMBLY L.H. (VBM.4272/B OR 64932083/HX)**		1	**R.H. DRIVE CARS ONLY**
10127	**Pad Carrier Assembly,** L.H. Inner (VBM.5347/B or 64328414/HX)		1	
9329	**Pad Carrier Assembly,** L.H. Outer (VBO.8235/B or 64328181/HX)		1	
9330	**Operating Lever Assembly** (VBO.8379 or 64328225)		1	
	All other items are as for Handbrake Mechanism Assembly C.22726			
C.22764	**HANDBRAKE MECHANISM ASSEMBLY R.H. (VBM.4273/A OR 64932080/HX)**		1	**L.H. DRIVE CARS ONLY**
9330	**Operating Lever Assembly** (VBO.8379 or 64328225)		1	
	All other items are as for Handbrake Mechanism Assembly C.22726			
C.22765	**HANDBRAKE MECHANISM ASSEMBLY L.H. (VBM.4273/B OR 64932081/HX)**		1	**L.H. DRIVE CARS ONLY**
10127	**Pad Carrier Assembly,** L.H. Inner (VBM.5347/B or 64328414/HX)		1	
9329	**Pad Carrier Assembly,** L.H. Outer (VBO.8235/B or 64328181/HX)		1	
	All other items are as for Handbrake Mechanism Assembly C.22726			
8016	**Bolt,** securing Handbrake Mechanism to Rear Calipers (VBO.4190 or 64328076)	30—33	4	
9750	**Retraction Plate,** on Bolts (VBM.4646/2 or 64328290)	30—34	2	
9751	**Tab Washer,** locking Bolts (VBO.4225 or 64328116)	30—35	2	
10531	**HANDBRAKE MECHANISM REPAIR KIT (VBO.9418/R OR 64932058/HX)**		1	
10418	**Bolt,** securing Handbrake Friction Pads to Carriers (VBO.8216 or 64328040)		4	
AN.102/L	**Nut,** on Bolts		4	
C.723	**Washer,** Shakeproof, under Nuts		4	
C.26779	**DISC ASSEMBLY FOR REAR CALIPERS**	30—36	2	

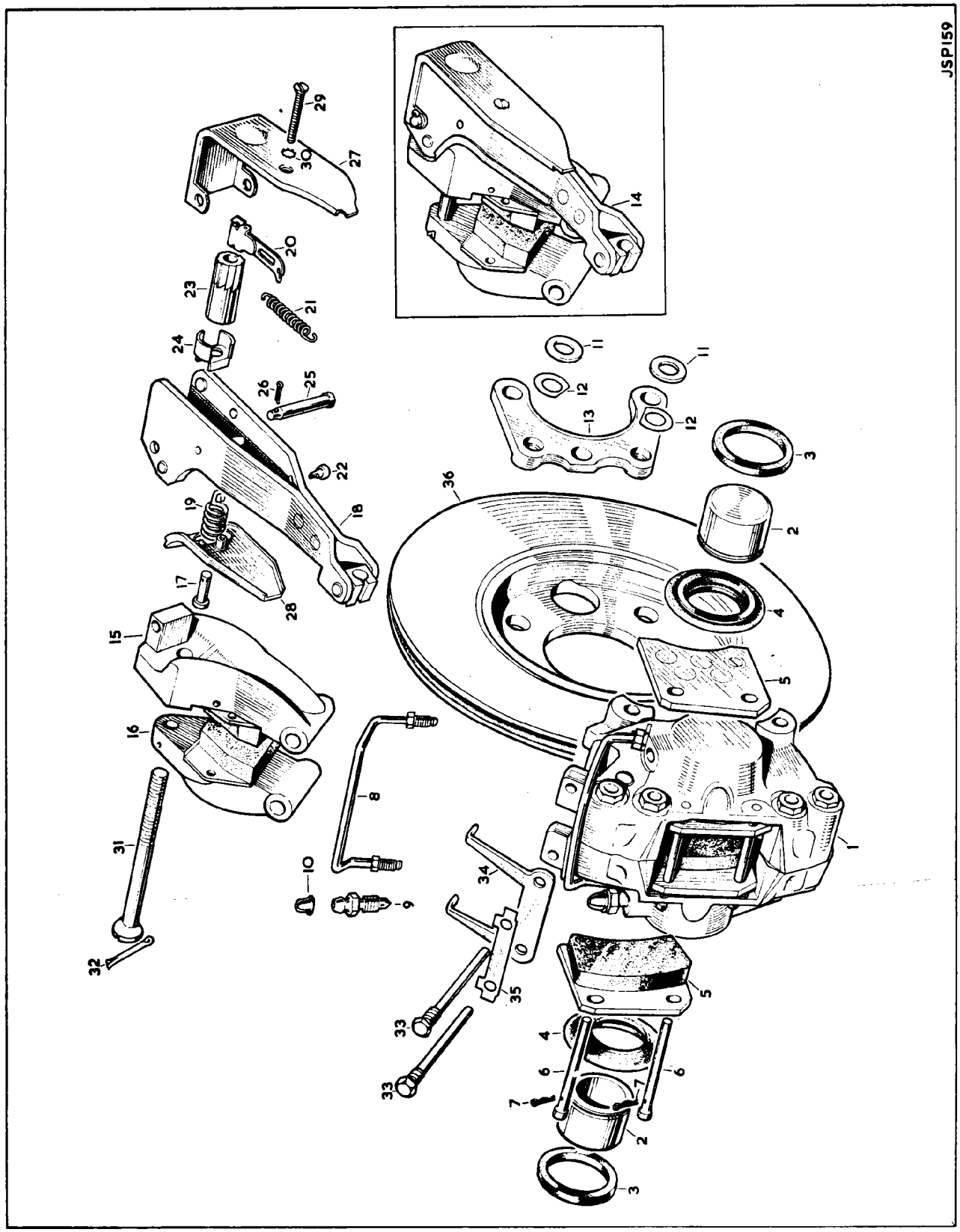
JSP159
1
2
3
4
5
6
7
8
9
10
11
12
13
14
15
16
17
18
19
20
21
22
23
24
25
26
27
28
29
30
31
32
33
34
35
36

PLATE 30

BRAKE VACUUM SERVO

Part No.	Description	Plate No.	No. per Unit	Remarks
C.26850	**BRAKE VACUUM SERVO ASSEMBLY (4258-447)**		1	
11441	**End Cover and Shell Assembly** (4326-754)	31—1	1	**SUPPLIED ONLY AS A PAIR**
10800	**Diaphragm** (3818-415)	31—2	1	
10801	**Support Plate,** for Diaphragm (3288-523)	31—3	1	
7170	**Return Spring,** for Diaphragm (88806)	31—4	1	
10805	**Key,** retaining Push Rod in Support Plate (3625-215)	31—5	1	
10933	**Abutment Plate,** in Servo Shell (3516-224)	31—6	1	
10880	**Screw,** securing Servo Shell to Slave Cylinder Body (3436-248)	31—7	1	
10934	**Plate,** locking Screws (3681-714)	31—8	1	
10937	**Gasket,** between Servo Shell and Slave Cylinder Body (3882-237)	31—9	1	
10932	**Spigot,** for Push Rod (3872-204)	31—10	1	
10931	**Seal,** for Pushrod, adjacent to Spigot (98677)	31—11	1	
10930	**Spacer,** between Seal and Primary Piston (3887-240)	31—12	1	
10927	**Push Rod** (3425-282)	31—13	1	
10926	**Primary Piston Assembly** (4271-417)	31—14	1	
10928	**Pin,** retaining Primary Piston to Push Rod (3413-250)	31—15	1	
10929	**Clip,** around Primary Piston (3528-263)	31—16	1	
10895	**Cup,** on Primary Piston (3871-448)	31—17	1	
10894	**Slave Cylinder Body** (3231-622)	31—18	1	
11232	**Secondary Piston** (3261-632)	31—19	1	
10895	**Cup,** at tapered end of Secondary Piston (3871-448)	31—20	1	
11236	**Cup,** on Secondary Piston, adjacent to Spring Seat (3871-452)	31—21	1	
10912	**Washer,** between Cup and Piston (107151)	31—22	1	
10896	**Stop Pin,** retaining Secondary Piston in Slave Cylinder Body (3421-273)	31—23	1	
10920	**Return Spring,** for Secondary Piston (3112-530)	31—24	1	
10922	**Spring Seat,** on nose of Secondary Piston (3664-657)	31—25	1	
11235	**Inlet Union,** on Slave Cylinder Body (3566-208)	31—26	1	
2539	**Washer** (Copper) on Inlet Union (KL.44532)	31—27	1	
10921	**Outlet Union** (Female) on Slave Cylinder Body (3577-405)	31—28	1	
C.11356	**Washer,** on Outlet Union (KL.44526)	31—29	1	
10889	**Valve Assembly,** below Outlet Union (4312-503)	31—30	1	
10891	**Spring,** under Valve (3112-269)	31—31	1	
C.8667/2	**Nut,** Self-Locking, securing Servo to Bracket		4	
C.26844	**BRACKET ASSEMBLY, MOUNTING BRAKE SERVO**	31—32	1	
UFS.131/4R	**Screw,** Set, securing Bracket to L.H. Front Wing Valance		4	
C.725	**Washer,** Shakeproof, on Setscrews		4	
BD.20543/2	**Tube** (Rubber) on Bracket, protecting Servo Hoses	31—33	1	
C.26847	**SHIELD, PROTECTING BRAKE SERVO**	31—34	1	
UFS.119/4R	**Screw,** Set, securing Shield to Servo Bracket		2	
AW.102/T	**Washer,** Plain, on Setscrews		2	
C.8667/2	**Nut,** Self-Locking, securing Shield to Servo		2	
BD.4983	**Washer,** Special, under Nuts		2	

SECTION 29

BRAKE VACUUM SERVO

Part No.	Description	Plate No.	No. per Unit	Remarks
11442	**REPAIR KIT FOR BRAKE VACUUM SERVO (SSB.1027)**		1	
	Comprising:-			
	10800 **Diaphragm**	1 off		
	10934 **Plate,** locking Setscrews	1 off		
	10937 **Gasket,** between Servo Shell and Slave Cylinder Body	1 off		
	10926 **Primary Piston Assembly**	1 off		
	10928 **Pin,** retaining Piston	1 off		
	10929 **Clip,** around Primary Piston	1 off		
	10895 **Cup,** for Pistons	2 off		
	11236 **Cup,** for Secondary Piston	1 off		
	10912 **Washer,** between Cup and Piston	1 off		

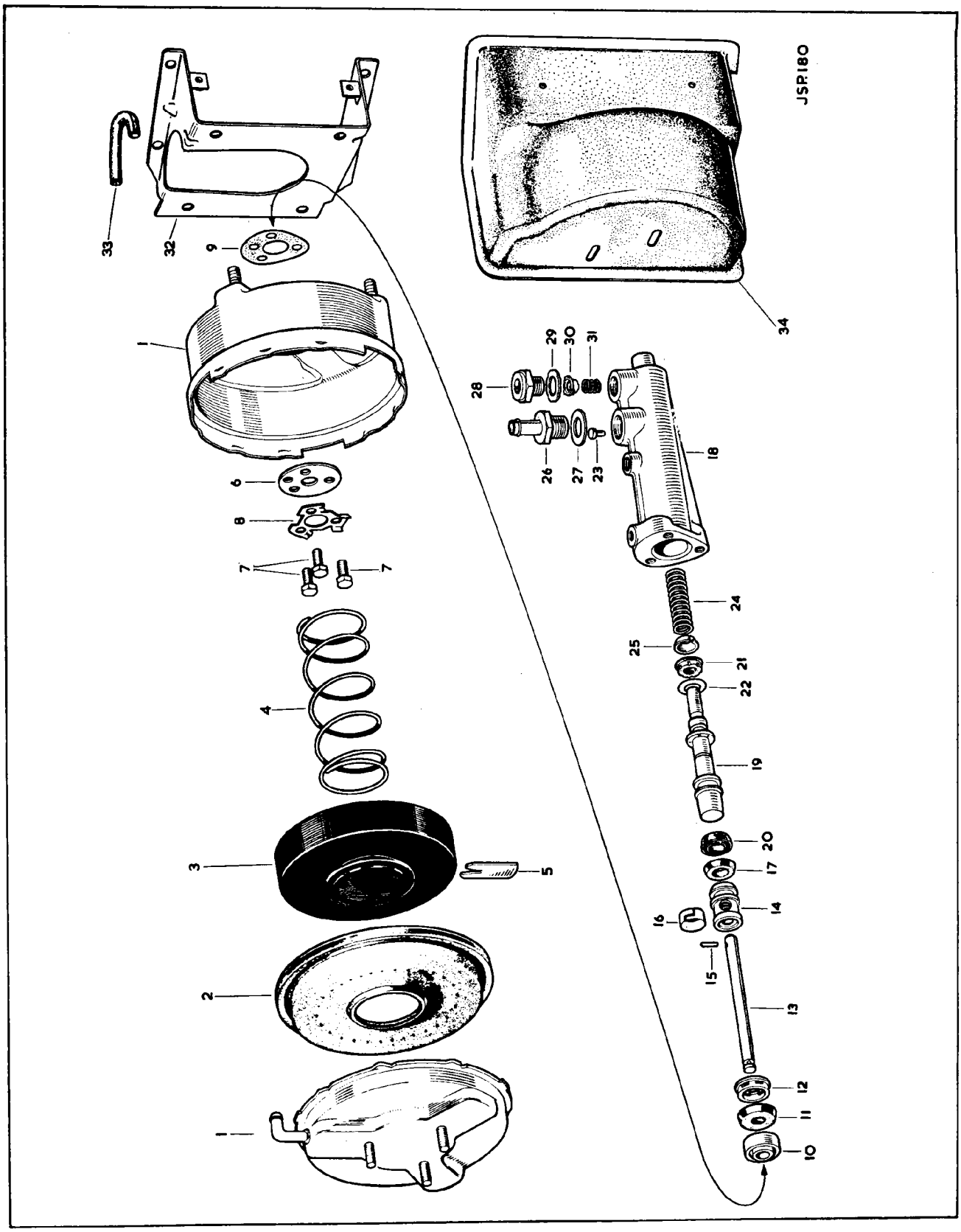
JSP180
1
2
3
4
5
6
7
7
8
9
10
11
12
13
14
15
16
17
18
19
20
21
22
23
24
25
26
27
28
29
30
31
32
33
34

PLATE 31

SECTION 30

RESERVAC TANK FOR BRAKE SERVO

R. H. DRIVE CARS ONLY

Part No.	Description	Plate No.	No. per Unit	Remarks
C.26883	**RESERVAC TANK ASSEMBLY**	32—1	1	
C.26888	**STEADY BRACKET FOR RESERVAC TANK**	32—2	1	
C.8737/1	**Nut**, Self-Locking, securing Steady Bracket to Body		1	
FW.104/T	**Washer**, Plain, under Nut		1	
UFS.119/4R	**Screw**, Set, securing Steady Bracket to Body		1	
UFN.119/L	**Nut**, on Setscrew		1	
C.723/A	**Washer**, Shakeproof, under Nut		1	
C.24913	**STONEGUARD ASSEMBLY FOR RESERVAC TANK**	32—3	1	
UFS.119/4R	**Screw**, Set, securing Stoneguard to Reservac Tank		3	
UFN.119/L	**Nut**, on Setscrews		3	
C.723/A	**Washer**, Shakeproof, under Nuts		3	
UFS.131/9R	**Screw**, Set, securing Reservac Tank and Stoneguard to Chassis Member		2	
C.8136	**Distance Piece**, on Setscrews	32—4	2	
C.8737/2	**Nut**, Self-Locking on Setscrews		2	
FW.105/T	**Washer**, Plain, under Nuts		2	
C.14693	**CHECK VALVE ASSEMBLY ON R.H. FRONT WING VALANCE**	32—5	1	
C.25168	**Adaptor**, connecting Vacuum Hose to Check Valve	32—6	1	
C.8016	**Grommet**, supporting Adaptor through Wing Valance	32—7	1	
C.27025/1	**VACUUM HOSE FROM ADAPTOR IN INLET MANIFOLD TO CHECK VALVE**	32—8	1	
C.15886/5	**Clip**, securing Vacuum Hose	32—9	2	
C.27395/1	**VACUUM HOSE FROM CHECK VALVE TO RESERVAC TANK**	32—10	1	
C.15886/5	**Clip**, securing Vacuum Hose	32—11	2	
C.17494	**VACUUM HOSE FROM CHECK VALVE TO VACUUM PIPE T-PIECE**	32—12	1	
C.15886 S	**Clip**, securing Hose	32—13	2	
C.27511	**Clip**, securing Vacuum Hoses at Ignition Coil Bracket	32—14	1	

SECTION 30

RESERVAC TANK FOR BRAKE SERVO

R. H. DRIVE CARS ONLY

Part No.	Description	Plate No.	No. per Unit	Remarks
C.26948	**VACUUM PIPE BETWEEN BRAKE SERVO UNIT AND REACTION VALVE**	32—15	1	
C.24858	**VACUUM HOSE FROM VACUUM PIPE TO BRAKE SERVO UNIT**	32—16	1	
C.15886/5	**Clip**, securing Vacuum Hose	32—17	2	
C.27025/2	**VACUUM HOSE FROM VACUUM PIPE TO REACTION VALVE**	32—18	1	
C.15886/5	**Clip**, securing Vacuum Hose	32—19	2	
C.26946	**PIPE, BETWEEN REACTION VALVE AND BRAKE SERVO UNIT**	32—20	1	
C.27097	**Clip**, securing Pipes to R.H. Diagonal Stiffener	32—21	1	
BD.22211	**Pad** (Rubber) between Clip and Pipes ($\frac{1}{2}$" x $1\frac{1}{2}$")		1	
C.27094	**Clip**, securing Pipes to R.H. Wing Valance	32—22	1	
C.27098	**Pad** (Rubber) between Clip and Pipes ($\frac{3}{8}$" x $1\frac{3}{8}$")		1	
C.27131	**Clip**, securing Pipes to Front Cross Member	32—23	1	
C.27095	**Clip**, securing Pipes to L.H. Wing Valance	32—24	1	
DZZ.410/6C	**Screw**, Self-Tapping, securing Clips		5	
C.24828	**HOSE, FROM PIPE TO REACTION VALVE**	32—25	1	
C.15886/5	**Clip**, securing Hose	32—26	2	
C.14713	**HOSE, FROM PIPE TO BRAKE SERVO UNIT**	32—27	1	
C.15886/5	**Clip**, securing Hose	32—28	2	

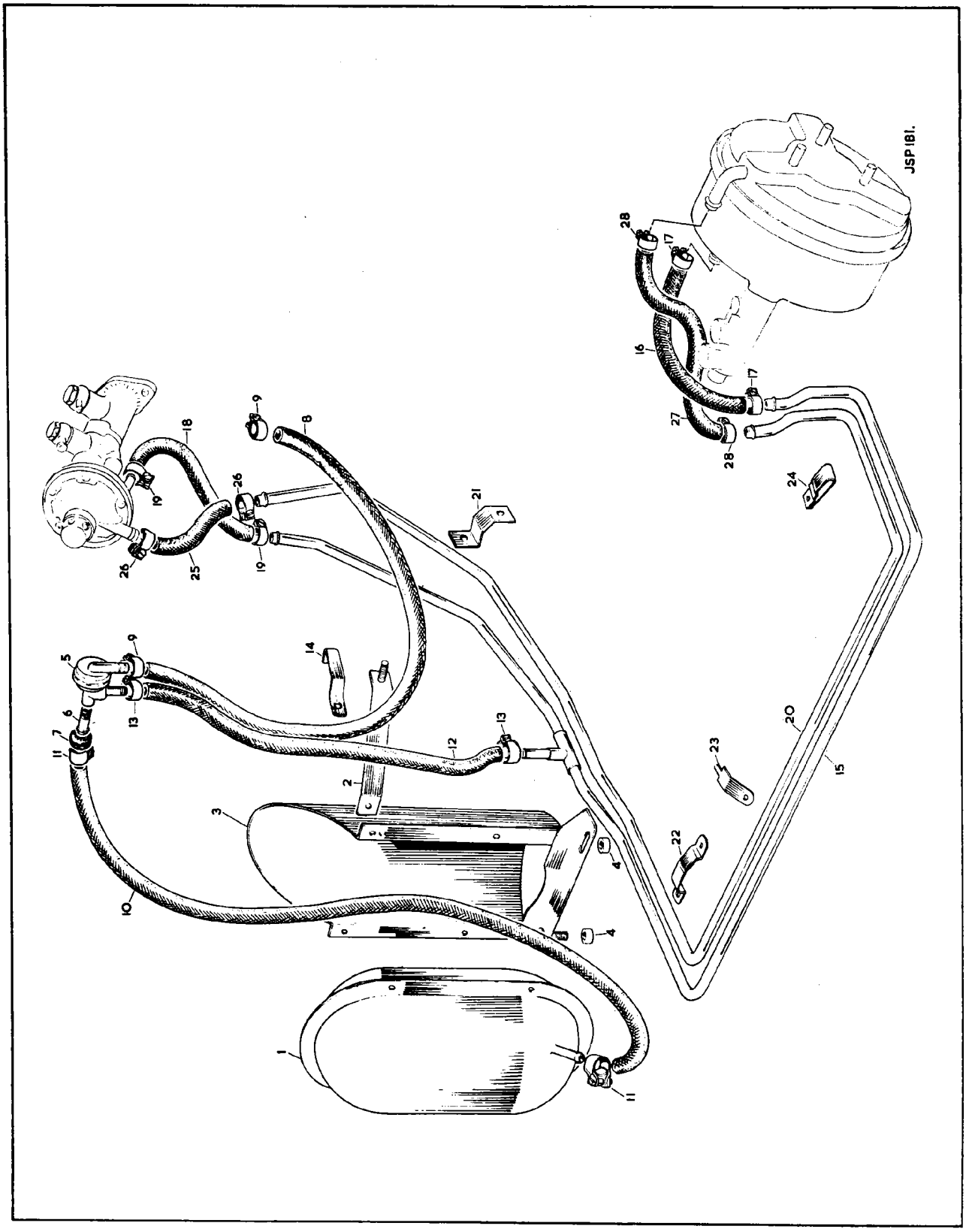

PLATE 32

SECTION 31

RESERVAC TANK FOR BRAKE SERVO

L. H. DRIVE CARS ONLY

Part No.	Description	Plate No.	No. per Unit	Remarks
C.26883	**RESERVAC TANK ASSEMBLY**	33—1	1	
C.26888	**STEADY BRACKET FOR RESERVAC TANK**	33—2	1	
C.8737/1	**Nut,** Self-locking, securing Steady Bracket to Body		1	
FW.104/T	**Washer,** Plain, under Nut		1	
UFS.119/4R	**Screw,** Set, securing Steady Bracket to Body		1	
UFN.119/L	**Nut,** on Setscrew		1	
C.723/A	**Washer,** Shakeproof, under Nut		1	
C.24913	**STONEGUARD ASSEMBLY FOR RESERVAC TANK**	33—3	1	
UFS.119/4R	**Screw,** Set, securing Stoneguard to Reservac Tank		3	
UFN.119/L	**Nut,** on Setscrews		3	
C.723/A	**Washer,** Shakeproof, under Nuts		3	
UFS.131/9R	**Screw,** Set, securing Reservac Tank to Stoneguard and Chassis Member		2	
C.8136	**Distance Piece,** on Setscrews	33—4	2	
C.8737/2	**Nut,** Self-locking, on Setscrews		2	
FW.105/T	**Washer,** Plain, under Nuts		2	
C.14693	**CHECK VALVE ASSEMBLY ON R.H. FRONT WING VALANCE**	33—5	1	
C.25168	**Adaptor,** connecting Vacuum Hose to Check Valve	33—6	1	
C.8016	**Grommet,** supporting Adaptor through Wing Valance	33—7	1	
C.27025/1	**VACUUM HOSE, FROM ADAPTOR IN INLET MANIFOLD TO CHECK VALVE**	33—8	1	
C.15886/5	**Clip,** securing Vacuum Hose	33—9	2	
C.27395/1	**VACUUM HOSE, FROM CHECK VALVE TO RESERVAC TANK**	33—10	1	
C.15886/5	**Clip,** securing Vacuum Hose	33—11	2	
C.26949	**VACUUM PIPE BETWEEN CHECK VALVE AND REACTION VALVE**	33—12	1	
C.17494	**VACUUM HOSE FROM CHECK VALVE TO VACUUM PIPE**	33—13	1	
C.15886/5	**Clip,** securing Vacuum Hose	33—14	2	
C.27511	**Clip,** securing Vacuum Hoses at Ignition Coil Bracket	33—15	1	

SECTION 31

RESERVAC TANK FOR BRAKE SERVO

L. H. DRIVE CARS ONLY

Part No.	Description	Plate No.	No. per Unit	Remarks
C.24828	**VACUUM HOSE FROM VACUUM PIPE TO REACTION VALVE**	33—16	1	
C.15886/5	**Clip**, securing Vacuum Hose	33—17	2	
C.24858	**VACUUM HOSE FROM VACUUM PIPE TO BRAKE SERVO UNIT**	33—18	1	
C.15886/5	**Clip**, securing Vacuum Hose	33—19	2	
C.26979	**PIPE BETWEEN REACTION VALVE AND BRAKE SERVO UNIT**	33—20	1	
C.27097	**Clip**, securing Pipes to L.H. Diagonal Stiffener	33—21	1	
BD.22211	**Pad** (Rubber) between Clip and Pipes ($\frac{1}{4}$" x $1\frac{1}{4}$")		1	
C.1040/9	**Clip**, securing Pipes to L.H. Wing Valance	33—22	1	
C.27131	**Clip**, securing Pipes to Front Cross Member	33—23	1	
C.1040/9	**Clip**, securing Pipes to R.H. Wing Valance	33—24	1	
DZZ.410/6C	**Screw**, Self-Tapping, securing Clips		5	
C.27025/2	**HOSE FROM PIPE TO REACTION VALVE**	33—25	1	
C.15886/5	**Clip**, securing Hose	33—26	2	
C.14713	**HOSE FROM PIPE TO BRAKE SERVO UNIT**	33—27	1	
C.15886/5	**Clip**, securing Hose	33—28	2	

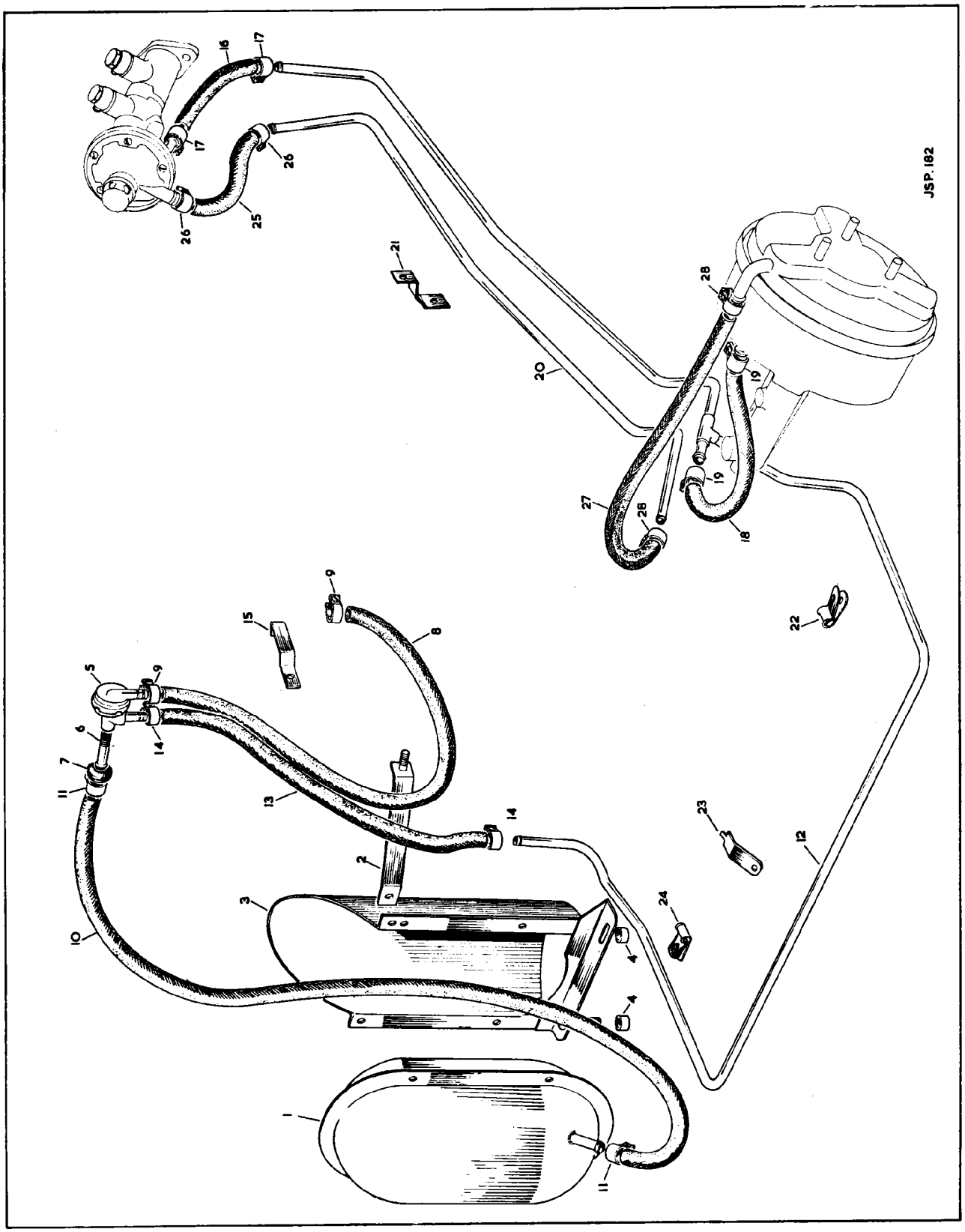

PLATE 33

BRAKE CONTROLS

Part No.	Description	Plate No.	No. per Unit	Remarks
C.26769	**BRAKE PEDAL (COMPLETE WITH BUSHES)**	34—1	1	**FOR R.H. DRIVE CARS FITTED WITH STANDARD OR OVERDRIVE TRANSMISSION**
C.20955/4	**Bush,** in Brake Pedal		2	
C.26770	**BRAKE PEDAL (COMPLETE WITH BUSHES)**		1	**FOR R.H. DRIVE CARS FITTED WITH AUTOMATIC TRANSMISSION**
C.20955/4	**Bush,** in Brake Pedal		2	
C.26771	**BRAKE PEDAL (COMPLETE WITH BUSHES)**		1	**L.H. DRIVE CARS ONLY**
C.20955/4	**Bush,** in Brake Pedal		2	
C.13248	**BRAKE PEDAL (COMPLETE WITH BUSHES)**		1	**FOR L.H. DRIVE CARS FITTED WITH AUTOMATIC TRANSMISSION**
C.20955/4	**Bush,** in Brake Pedal		2	**NOTE: This Pedal operates on the normal Clutch Pedal Fulcrum and is joined to Brake Pedal C.26771 by Steel Pad C.15326**
C.8962	**Washer** (Fibre) at each side of Pedal Boss	34—2	2	**4 REQUIRED FOR L.H. DRIVE AUTOMATIC TRANSMISSION CARS**
C.26941	**STOP PLATE FOR BRAKE PEDAL**	34—3	1	
UFS.131/12R	**Screw,** Set, in Stop Plate	34—4	1	
BD.10224	**Buffer** (Rubber) on Setscrew	34—5	1	
UFN.131/L	**Nut,** locking Setscrew	34—6	2	
FW.105/T	**Washer,** Plain, under Nuts	34—7	2	
C.8966	**RETURN SPRING, FOR BRAKE PEDAL**	34—8	1	
C.23410	**PAD (STEEL) ON BRAKE PEDAL**	34—9	1	**FOR R.H. DRIVE CARS FITTED WITH STANDARD OR OVERDRIVE TRANSMISSION**
C.14852	**PAD (STEEL) ON BRAKE PEDAL**		1	**FOR L.H. DRIVE CARS FITTED WITH STANDARD OR OVERDRIVE TRANSMISSION**
C.13066	**PAD (STEEL) ON BRAKE PEDAL**		1	**FOR R.H. DRIVE CARS FITTED WITH AUTOMATIC TRANSMISSION**
C.15326	**PAD (STEEL) ON BRAKE PEDAL**		1	**FOR L.H. DRIVE CARS FITTED WITH AUTOMATIC TRANSMISSION**
C.8667/2	**Nut,** Self-locking, securing Steel Pad to Brake Pedal		1	**2 REQUIRED FOR L.H. DRIVE AUTOMATIC TRANSMISSION CARS**

SECTION 32

BRAKE CONTROLS

Part No.	Description	Plate No.	No. per Unit	Remarks
C.8969	**PAD (RUBBER) ON BRAKE PEDAL**	34—10	1	**NOT REQUIRED FOR CARS FITTED WITH AUTOMATIC TRANSMISSION**
C.6876	**PAD (RUBBER) ON BRAKE PEDAL**		1	**FOR CARS FITTED WITH AUTOMATIC TRANSMISSION**
C.26829	**PEDAL HOUSING**	34—11	1	**R.H. DRIVE CARS ONLY**
C.26766	**PEDAL HOUSING**		1	**L.H. DRIVE CARS ONLY**
C.8954	**Stud,** mounting Housing to Scuttle	34—12	5	
C.18203	**Stud,** mounting Housing to Scuttle	34—13	2	
UFN.131/L	**Nut,** on Studs		7	
C.725	**Washer,** Shakeproof, under Nuts		7	
C.8957	**Gasket,** between Housing and Scuttle	34—14	1	
C.8958	**SHAFT, SUPPORTING BRAKE PEDAL IN HOUSING**	34—15	1	
C.8967	**Bolt,** securing Shaft in Housing	34—16	1	
C.8737/1	**Nut,** Self-locking, on Bolt	34—17	1	
FW.104/T	**Washer,** Plain, under Nut	34—18	1	
C.26767	**BRAKE MASTER CYLINDER AND REACTION VALVE (LESS PUSH ROD) (4212-553)**	34—19	1	
11437	**Brake Master Cylinder Assembly** (less Reaction Valve) (4212-554)		1	
10917	**Boot** (Rubber) over end of Master Cylinder (3815-733)	34—20	1	
10899	**Valve Housing Assembly** (4326-665)	34—21	1	
10908	**Gasket,** between Valve Housing and Master Cylinder Body (3881-235)	34—22	1	
10915	**Screw,** securing Valve Housing to Master Cylinder Body (K23601TP)	34—23	2	
10916	**Washer,** Shakeproof, on Screws (K19406)	34—24	2	
10905	**Diaphragm,** for Reaction Valve (3818-407)	34—25	1	
10904	**Support,** for Diaphragm (3887-223)	34—26	1	
10892	**Reaction Valve Assembly,** complete with Cover (4316-616)	34—27	1	
10907	**Screw,** securing Valve Cover to Housing (3433-228)	34—28	5	
11437	**BRAKE MASTER CYLINDER ASSEMBLY (LESS REACTION VALVE) (4212-554)**		1	
10874	**Body only** (3212-212)	34—29	1	
10890	**Piston Assembly** (4272-426)	34—30	1	
10882	**Piston Bearing** (Inner) (3852-223)	34—31	1	
10878	**Piston Bearing** (Outer) (3873-202)	34—32	1	
10881	**Piston Seal,** in Outer Bearing (3872-418)	34—33	1	
4278	**'O' Ring,** around Outer Bearing (31593)	34—34	1	
10879	**Circlip,** retaining Bearing (3528-284)	34—35	1	
10883	**Return Spring,** for Piston (3114-240)	34—36	1	
10884	**Retainer,** holding Return Spring to Piston (3664-642)	34—37	1	
10885	**Circlip,** securing Retainer to Piston (K.27404)	34—38	1	
11438	**Outlet Banjo,** at front of Master Cylinder (3743-229)	34—39	1	
11439	**Bolt,** securing Banjo (3438-640)	34—40	1	

Part No.	Description	Plate No.	No. per Unit	Remarks
	BRAKE MASTER CYLINDER (LESS REACTION VALVE) (cont'd)			
C.11356	**Washer** (Copper) on Banjo Bolt (KL.44526)	34—41	2	
10889	**Valve Assembly**, below Outlet Banjo (4312-503)	34—42	1	
10891	**Spring**, under Valve (3112-269)	34—43	1	
11440	**Washer**, under Spring (K.19107)	34—44	1	
10877	**Lever**, actuating Valve Piston (3618-622)	34—45	1	
10875	**Piston**, operating Reaction Valve (3261-413)	34—46	1	
10876	**Seal**, on Valve Piston (3862-435)	34—47	1	
10898	**'O' Ring**, on Valve Piston (3855-721)	34—48	1	
C.26292	**Banjo**, for connection of Hose from Fluid Reservoir (3741-214)	34—49	1	
11234	**Bolt**, securing Banjo (468)	34—50	1	
2539	**Washer** (Copper) on Banjo Bolt (KL.44532)	34—51	2	
C.8956	**Stud**, fixing Master Cylinder to Pedal Housing	34—52	2	
UFN.131/L	**Nut**, on Studs		2	
C.725	**Washer**, Shakeproof, under Nuts		2	
C.26901	**PUSH ROD ASSEMBLY (4115-102)**	34—53	1	**R.H. DRIVE CARS ONLY**
C.26902	**PUSH ROD ASSEMBLY (4115-077)**		1	**L.H. DRIVE CARS ONLY**
J.105/10S	**Clevis Pin**, securing Push Rod to Brake Pedal	34—54	1	
L.103/7U	**Split Pin**, retaining Clevis Pin		1	
FW.105/T	**Washer**, Plain, behind Split Pin		1	
10918	**REPAIR KIT FOR BRAKE MASTER CYLINDER (SSB.737)**		1	

Comprising:-

N.S.S.	**Spring Retainer**, for Piston	1 off
N.S.S.	**Main Cup**, for Piston	1 off
10881	**Piston Seal**, in Outer Bearing	1 off
4278	**'O' Ring**, around Outer Bearing	1 off
10876	**Seal**, on Valve Piston	1 off
10898	**'O' Ring**, on Valve Piston	1 off
10917	**Boot** (Rubber) over end of Master Cylinder	1 off
10908	**Gasket**, between Valve Housing and Master Cylinder Body	1 off

11305	**REPAIR KIT FOR REACTION VALVE (SSB.1032)**	1	

Comprising:-

10892	**Reaction Valve Assembly**, complete with Cover	1 off
10905	**Diaphragm**, for Reaction Valve	1 off

SECTION 32

BRAKE CONTROLS

Part No.	Description	Plate No.	No. per Unit	Remarks
C.13070	**COVER PLATE, BLANKING REDUNDANT HOLE FOR CLUTCH MASTER CYLINDER**		1	**REQUIRED FOR CARS FITTED WITH AUTOMATIC TRANSMISSION**
UCS.131/4R	**Screw,** Set, securing Cover Plate to Housing		2	
C.725	**Washer,** Shakeproof, on Setscrews		2	
C.8971	**COVER PLATE, SEALING REDUNDANT PEDAL HOLE IN DASH**		1	
C.8957	**Gasket,** under Cover Plate		1	
UFS.125/5R	**Screw,** Set, securing Cover Plate		4	
UFN.125/L	**Nut,** on Setscrews		4	
C.724	**Washer,** Shakeproof, under Nuts		4	
FW.104/T	**Washer,** Plain, under Shakeproof Washers		4	

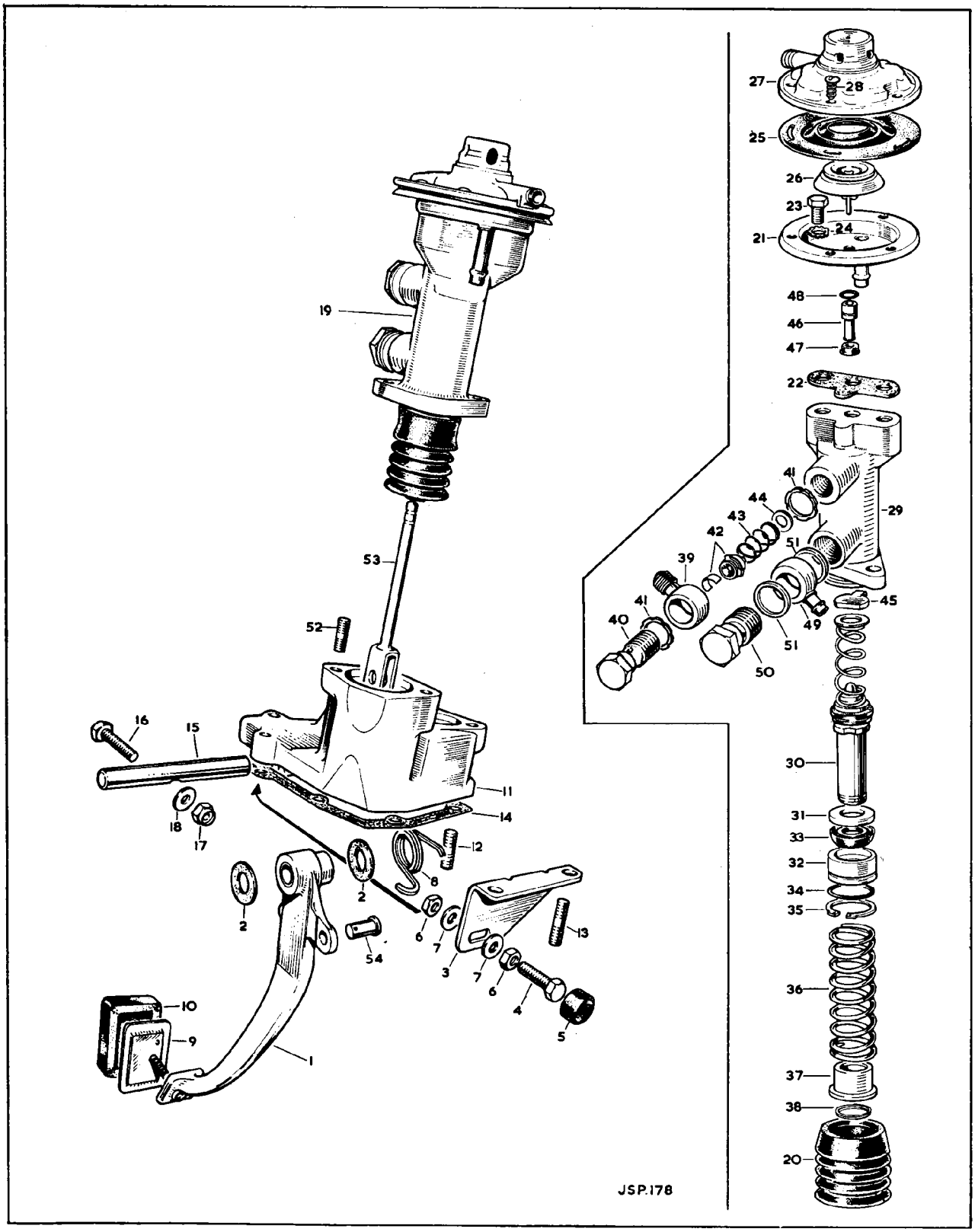

PLATE 34

SECTION 33

HYDRAULIC BRAKE PIPES

R. H. DRIVE CARS ONLY

Part No.	Description	Plate No.	No. per Unit	Remarks
C.23639	**BRAKE FLUID RESERVOIR ASSEMBLY (COMPLETE WITH FILLER CAP AND LEVEL INDICATOR)**	35—1	2	
C.23631	**Filler Cap and Level Indicator Switch**	35—2	2	
C.23627	**Protective Cap,** over Indicator Plunger	35—3	2	
C.26824	**BRACKET, MOUNTING RESERVOIRS TO FRONT WING VALANCES**	35—4	2	
UFB.125/20R	**Bolt,** clamping Reservoirs in Brackets		2	
C.8737/1	**Nut,** Self-locking, on Bolts		2	
UFS.131/4R	**Screw,** Set, securing Brackets to Wing Valances		4	
C.725	**Washer,** Shakeproof, on Setscrews		4	
FW.105/T	**Washer,** Plain, under Shakeproof Washers		4	
C.20072/1	**LOW PRESSURE HOSE FROM RESERVOIR TO REAR BANJO ON MASTER CYLINDER**	35—5	1	
C.20072/12	**LOW PRESSURE HOSE FROM RESERVOIR TO R.H. INTERMEDIATE CONNECTION ON SLAVE CYLINDER**	35—6	1	
C.15886/4	**Clip,** securing Low Pressure Hoses	35—7	4	
C.26919	**HYDRAULIC PIPE ASSEMBLY FROM FRONT BANJO ON MASTER CYLINDER TO PIPE CONNECTOR**	35—8	1	
C.3923	**PIPE CONNECTOR (5248)**	35—9	1	
C.27297	**HYDRAULIC PIPE ASSEMBLY FROM PIPE CONNECTOR TO PIPE CONNECTOR (T.29/B)**	35—10	1	
C.3923	**PIPE CONNECTOR (5248)**	35—11	1	
C.27296	**HYDRAULIC PIPE ASSEMBLY FROM PIPE CONNECTOR TO L.H. CONNECTION ON SLAVE CYLINDER (T.64/7B)**	35—12	1	
C.26921	**HYDRAULIC PIPE ASSEMBLY FROM L.H. INTERMEDIATE CONNECTION ON SLAVE CYLINDER TO 4-WAY UNION (3601710.W.)**	35—13	1	

HYDRAULIC BRAKE PIPES

R. H. DRIVE CARS ONLY

Part No.	Description	Plate No.	No. per Unit	Remarks
C.17464	**4-WAY UNION (VBO.7301 OR 64476337)**	35—14	1	
UFB.125/13R	**Bolt,** securing 4-way Union to L.H. Front Wing Valance		1	
C.19987	**Distance Piece,** between Union and Wing Valance	35—15	1	
C.8737/1	**Nut,** Self-locking, on Bolt		1	
C.26923	**HYDRAULIC PIPE ASSEMBLY FROM 4-WAY UNION TO R.H. FRONT FLEXIBLE HOSE (64473943)**	35—16	1	
C.26925	**HYDRAULIC PIPE ASSEMBLY FROM 4-WAY UNION TO L.H. FRONT FLEXIBLE HOSE (3405230.W.)**	35—17	1	
C.27030	**FRONT FLEXIBLE HOSE (64047360)**	35—18	2	
UFN.237/L	**Nut,** locking Hoses to Brackets on Body and Front Suspension	35—19	4	
C.726	**Washer,** Shakeproof, under Nuts	35—20	4	
C.26924	**HYDRAULIC PIPE ASSEMBLY FROM FLEXIBLE HOSE TO R.H. FRONT BRAKE CALIPER (3601530.W.)**	35—21	1	
C.26926	**HYDRAULIC PIPE ASSEMBLY FROM FLEXIBLE HOSE TO L.H. FRONT BRAKE CALIPER (3601530.W.)**	35—22	1	
C.26927	**HYDRAULIC PIPE ASSEMBLY FROM R.H. CONNECTION ON SLAVE CYLINDER TO PIPE CONNECTOR (64474317)**	35—23	1	
C.27032	**PIPE CONNECTOR (374102.W.)**	35—24	1	
C.27008	**HYDRAULIC PIPE ASSEMBLY FROM PIPE CONNECTOR TO REAR FLEXIBLE HOSE (64476766)**	35—25	1	
C.27031	**REAR FLEXIBLE HOSE (64047368)**	35—26	1	
UFN.237/L	**Locknut,** securing Rear Flexible Hose to Bracket on Body	35—27	1	
C.726	**Washer,** Shakeproof, under Locknut	35—28	1	
C.11239	**Washer** (Copper) at connection of Hose to 3-Way Union (KL.44516)	35—29	1	

SECTION 33

HYDRAULIC BRAKE PIPES

R. H. DRIVE CARS ONLY

Part No.	Description	Plate No.	No. per Unit	Remarks
C.13685	**3-WAY UNION (29587)**	35—30	1	
UFB.125/9R	**Bolt**, securing 3-way Union to Rear Suspension Cross Member		1	
UFN.125/L	**Nut**, on Bolt		1	
C.724	**Washer**, Shakeproof, under Nut		1	
FW.104/T	**Washer**, Plain, under Shakeproof Washer		1	
C.26929	**HYDRAULIC PIPE ASSEMBLY FROM 3-WAY UNION TO R.H. REAR BRAKE CALIPER (64473108)**	35—31	1	
C.26928	**HYDRAULIC PIPE ASSEMBLY FROM 3-WAY UNION TO L.H. REAR BRAKE CALIPER (3504910.W.)**	35—32	1	
	BRAKE PIPE CLIPS AND RUBBER PADS			
C.27097	**Clip**, securing Hydraulic Pipes to R.H. Diagonal Stiffener	35—33	1	
BD.22211	**Pad** (Rubber) between Clip and Hydraulic Pipes ($\frac{1}{2}$" x $1\frac{1}{4}$")		1	
C.27094	**Clip**, securing Hydraulic Pipes to R.H. Wing Valance	35—34	1	
C.27098	**Pad** (Rubber) between Clip and Hydraulic Pipes ($\frac{5}{8}$" x $1\frac{5}{8}$")		1	
C.22081	**Clip**, securing Hydraulic Pipes to Front Cross Member	35—35	2	
C.27095	**Clip**, securing Hydraulic Pipe to L.H. Wing Valance	35—36	1	
C.1040/13	**Clip**, securing Hydraulic Pipe to Wing Valances and L.H. Underframe Side Member	35—37	6	
C.20414	**Clip**, securing Hydraulic Pipes to L.H. Wing Valance	35—38	1	
C.1040/24	**Clip**, securing Hydraulic Pipe to Rear Suspension Cross Member at Centre	35—39	1	
DZZ.410/6C	**Screw**, Self-Tapping, securing Clips		15	

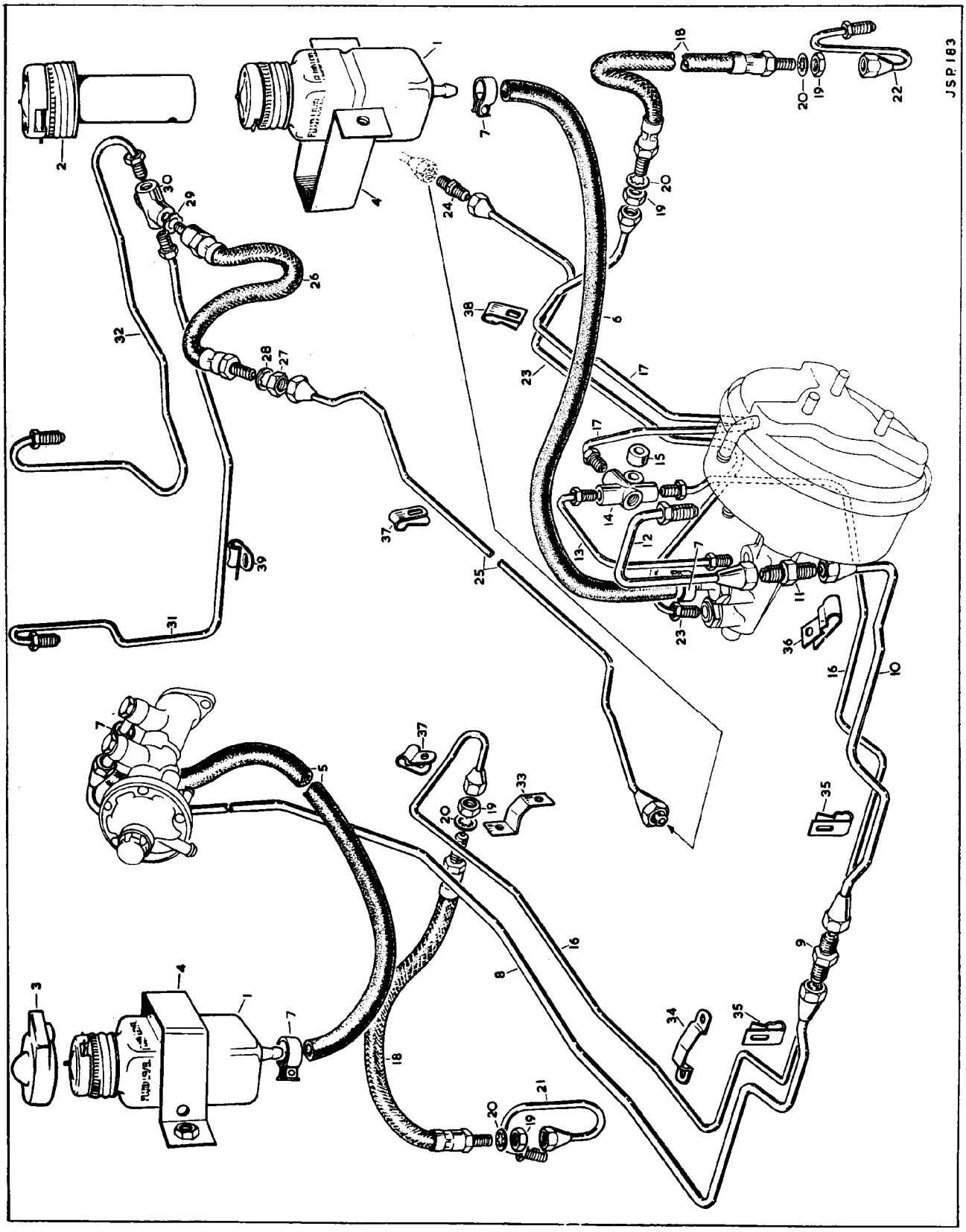

PLATE 35

SECTION 34

HYDRAULIC BRAKE PIPES

L. H. DRIVE CARS ONLY

Part No.	Description	Plate No.	No. per Unit	Remarks
C.23639	**BRAKE FLUID RESERVOIR ASSEMBLY (COMPLETE WITH FILLER CAP AND LEVEL INDICATOR)**	36—1	2	
C.23631	**Filler Cap and Level Indicator Switch**	36—2	2	
C.23627	**Protective Cap**, over Indicator Plunger	36—3	2	
C.20233	**BRACKET, MOUNTING RESERVOIRS TO L.H. FRONT WING VALANCE**	36—4	1	
UFS.131/4R	**Screw**, Set, securing Bracket to L.H. Wing Valance		2	
C.725	**Washer**, Shakeproof, on Setscrews		2	
FW.105/T	**Washer**, Plain, under Shakeproof Washers		2	
C.26825	**CLAMP, FIXING RESERVOIRS TO BRACKET**	36—5	2	
C.20235	**Stud**, securing Clamps to Bracket	36—6	1	
C.8737/1	**Nut**, Self-locking, on Stud		2	
C.20072/1	**LOW PRESSURE HOSE FROM RESERVOIR TO REAR BANJO ON MASTER CYLINDER**	36—7	1	
C.20072/12	**LOW PRESSURE HOSE FROM RESERVOIR TO R.H. INTERMEDIATE CONNECTION ON SLAVE CYLINDER**	36—8	1	
C.15886/4	**Clip**, securing Low Pressure Hoses	36—9	4	
C.27335	**HYDRAULIC PIPE ASSEMBLY FROM FRONT BANJO ON MASTER CYLINDER TO PIPE CONNECTOR (T.69B)**	36—10	1	
C.3923	**PIPE CONNECTOR (5248)**	36—11	1	
C.27296	**HYDRAULIC PIPE ASSEMBLY FROM PIPE CONNECTOR TO L.H. CONNECTION ON SLAVE CYLINDER (T64/7B)**	36—12	1	
C.26921	**HYDRAULIC PIPE ASSEMBLY FROM L.H. INTERMEDIATE CONNECTION ON SLAVE CYLINDER TO 4-WAY UNION (3601710.W.)**	36—13	1	

HYDRAULIC BRAKE PIPES

L. H. DRIVE CARS ONLY

Part No.	Description	Plate No.	No. per Unit	Remarks
C.17464	**4-WAY UNION (VBO.7301 OR 64476337)**	36—14	1	
UFB.125/13R	**Bolt,** securing 4-way Union to L.H. Front Wing Valance		1	
C.19987	**Distance Piece,** between Union and Wing Valance	36—15	1	
C.8737/1	**Nut,** Self-locking, on Bolt		1	
C.26923	**HYDRAULIC PIPE ASSEMBLY FROM 4-WAY UNION TO R.H. FRONT FLEXIBLE HOSE (64473943)**	36—16	1	
C.26925	**HYDRAULIC PIPE ASSEMBLY FROM 4-WAY UNION TO L.H. FRONT FLEXIBLE HOSE (3405230.W.)**	36—17	1	
C.27030	**FRONT FLEXIBLE HOSE (64047360)**	36—18	2	
UFN.237/L	**Nut,** locking Hoses to Brackets on Body and Front Suspension	36—19	4	
C.726	**Washer,** Shakeproof, under Nuts	36—20	4	
C.26924	**HYDRAULIC PIPE ASSEMBLY FROM FLEXIBLE HOSE TO R.H. FRONT BRAKE CALIPER (3601530.W.)**	36—21	1	
C.26926	**HYDRAULIC PIPE ASSEMBLY FROM FLEXIBLE HOSE TO L.H. FRONT BRAKE CALIPER (3601530.W.)**	36—22	1	
C.26927	**HYDRAULIC PIPE ASSEMBLY FROM R.H. CONNECTION ON SLAVE CYLINDER TO PIPE CONNECTOR (64474317)**	36—23	1	
C.27032	**PIPE CONNECTOR (374102.W.)**	36—24	1	
C.27008	**HYDRAULIC PIPE ASSEMBLY FROM PIPE CONNECTOR TO REAR FLEXIBLE HOSE (64476766)**	36—25	1	
C.27031	**REAR FLEXIBLE HOSE (64047368)**	36—26	1	
UFN.237/L	**Locknut,** securing Rear Flexible Hose to Bracket on Body	36—27	1	
C.726	**Washer,** Shakeproof, under Nut	36—28	1	
C.11239	**Washer,** (Copper) at connection of Hose to 3-way Union (KL.44516)	36—29	1	

SECTION 34

HYDRAULIC BRAKE PIPES

L. H. DRIVE CARS ONLY

Part No.	Description	Plate No.	No. per Unit	Remarks
C.13685	**3-WAY UNION (29587)**	36—30	1	
UFB.125/9R	**Bolt,** securing 3-way Union to Rear Suspension Cross Member		1	
UFN.125/L	**Nut,** on Bolt		1	
C.724	**Washer,** Shakeproof, under Nut		1	
FW.104/T	**Washer,** Plain, under Shakeproof Washer		1	
C.26929	**HYDRAULIC PIPE ASSEMBLY FROM 3-WAY UNION TO R.H. REAR BRAKE CALIPER (64473108)**	36—31	1	
C.26928	**HYDRAULIC PIPE ASSEMBLY FROM 3-WAY UNION TO L.H. REAR BRAKE CALIPER (3504910.W.)**	36—32	1	
	BRAKE PIPE CLIPS AND RUBBER PADS			
C.27097	**Clip,** securing Hydraulic Pipe to L.H. Diagonal Stiffener	36—33	1	
BD.22211	**Pad** (Rubber) between Clip and Hydraulic Pipes ($\frac{1}{2}$" x 1$\frac{1}{4}$")		1	
C.1040/13	**Clip,** securing Hydraulic Pipes to R.H. Front Wing Valance, Front Cross Member, and Underframe Side Member	36—34	9	
C.20414	**Clip,** securing Hydraulic Pipes to L.H. Wing Valance	36—35	1	
C.1040/24	**Clip,** securing Hydraulic Pipe to Rear Suspension Cross Member at Centre	36—36	1	
DZZ.410/6C	**Screw,** Self-Tapping, securing Clips		12	

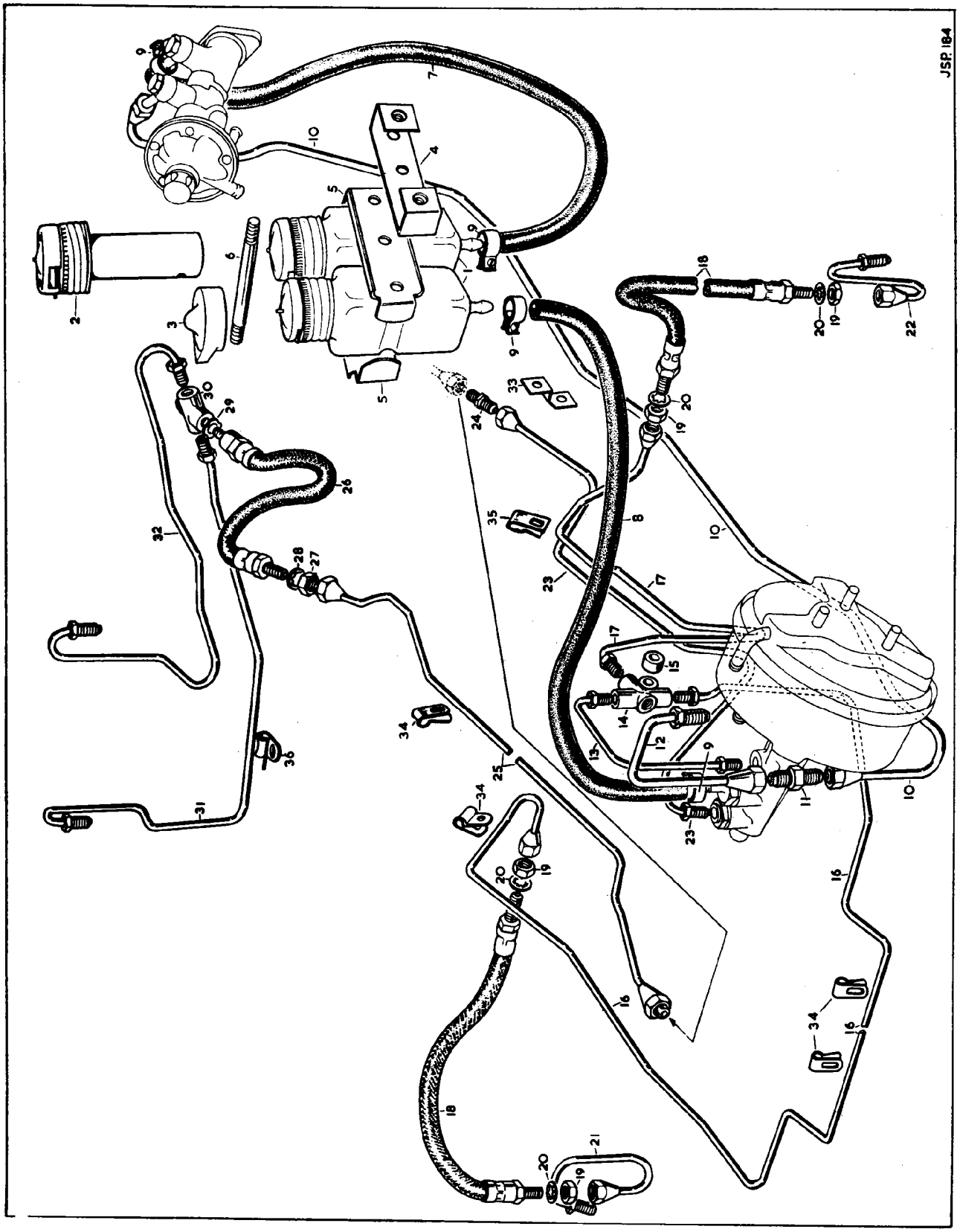

PLATE 36

HANDBRAKE CONTROL

Part No.	Description	Plate No.	No. per Unit	Remarks
C.15501	**HANDBRAKE ASSEMBLY**	37—1	1	**R.H. DRIVE CARS ONLY**
C.15502	**HANDBRAKE ASSEMBLY**		1	**L.H. DRIVE CARS ONLY**
C.17162	**Cover Plate,** enclosing Handbrake Pawl	37—2	1	
UFS.137/7R	**Screw,** Set, securing Handbrake to Floor		2	
FG.106/X	**Washer,** Spring, on Setscrew		1	
C.8667/3	**Nut,** Self-Locking, on Setscrew		1	
FW.106/T	**Washer,** Plain, under Nut (below Floor)		1	
C.24316	**SHAFT ASSEMBLY FOR HANDBRAKE LEVER**	37—3	1	
C.22023	**HOUSING, FOR HANDBRAKE SHAFT**	37—4	1	
C.22024	**Seal** (Rubber) on Handbrake Shaft	37—5	1	
UFS.125/7R	**Screw,** Set, securing Housing to Underframe		2	
FG.104/X	**Washer,** Spring, on Setscrews		2	
C.22025	**HANDBRAKE LEVER FROM SHAFT TO HANDBRAKE CABLE**	37—6	1	
UFS.131/6R	**Screw,** Set, clamping Lever to Splined end of Shaft		1	
FG.105/X	**Washer,** Spring, on Setscrew		1	
C.23025	**ABUTMENT BRACKET FOR HANDBRAKE CABLE**	37—7	1	
UFS.119/6R	**Screw,** Set, securing Abutment Bracket to Underframe		2	
AG.102/X	**Washer,** Spring, on Setscrews		2	
AW.102/T	**Washer,** Plain, under Spring Washers		2	
C.22026	**HANDBRAKE CABLE ASSEMBLY**	37—8	1	
C.19699	**Trunnion,** retaining Handbrake Cable in Connecting Lever	37—9	1	
C.19700	**Adjusting Nut,** for Cable, at front and rear of Trunnion	37—10	2	
UFS.125/8R	**Screw,** Set, securing Handbrake Cable in Abutment Bracket		1	
FG.104/X	**Washer,** Spring, on Setscrew		1	
C.23112	**Spring,** for suspension of Handbrake Cable to underside of Floor	37—11	1	
C.23113	**Clip,** anchoring Cable to Underframe	37—12	1	
J.105/11S	**Clevis Pin,** securing Handbrake Cable to Operating Lever of Handbrake Mechanism	37—13	1	**FITTED AT L.H. SIDE ON R.H. DRIVE CARS AND R.H. SIDE ON L.H. DRIVE CARS**
L.103/7U	**Split Pin,** retaining Clevis Pin		1	
FW.105/T	**Washer,** Plain, behind Split Pin		1	
C.22690	**Return Spring,** between Handbrake Mechanism Operating Levers and Rear Suspension Cross Member	37—14	2	
C.27589	**Bracket,** anchoring Return Springs at Cross Member	37—15	2	
UFS.119/4R	**Screw,** Set, securing Brackets to Cross Member		2	
C.8667/17	**Nut,** Self-locking, on Setscrews		2	

SECTION 35

HANDBRAKE CONTROL

Part No.	Description	Plate No.	No. per Unit	Remarks
C.12833	**SWITCH, AT BASE OF HANDBRAKE LEVER, OPERATING HANDBRAKE WARNING LAMP**	37—16	1	**See also Electrical Equipment**
C.16180	**Bracket,** mounting Warning Lamp Switch	37—17	1	
UFS.119/4R	**Screw,** Set, securing Bracket		2	
UFN.119/L	**Nut,** on Setscrews		2	
C.723/A	**Washer,** Shakeproof, under Nuts		2	
UFN.125/L	**Nut,** securing Switch to Bracket		2	
C.16185	**Bracket,** operating Warning Lamp Switch	)7—18	1	**R.H. DRIVE CARS ONLY**
C.16188	**Bracket,** operating Warning Lamp Switch		1	**L.H. DRIVE CARS ONLY**
C.22027	**BLANKING PLATE SEALING REDUNDANT HOLE FOR HANDBRAKE SHAFT**		1	
C.22028	**Gasket,** for Blanking Plate		1	
UFS.125/5R	**Screw,** Set, securing Blanking Plate to Underframe Side Member		2	
FG.104/X	**Washer,** Spring, on Setscrews		2	
C.11046	**Plug** (Rubber) sealing Redundant Hole in Floor for Handbrake Fixing		1	

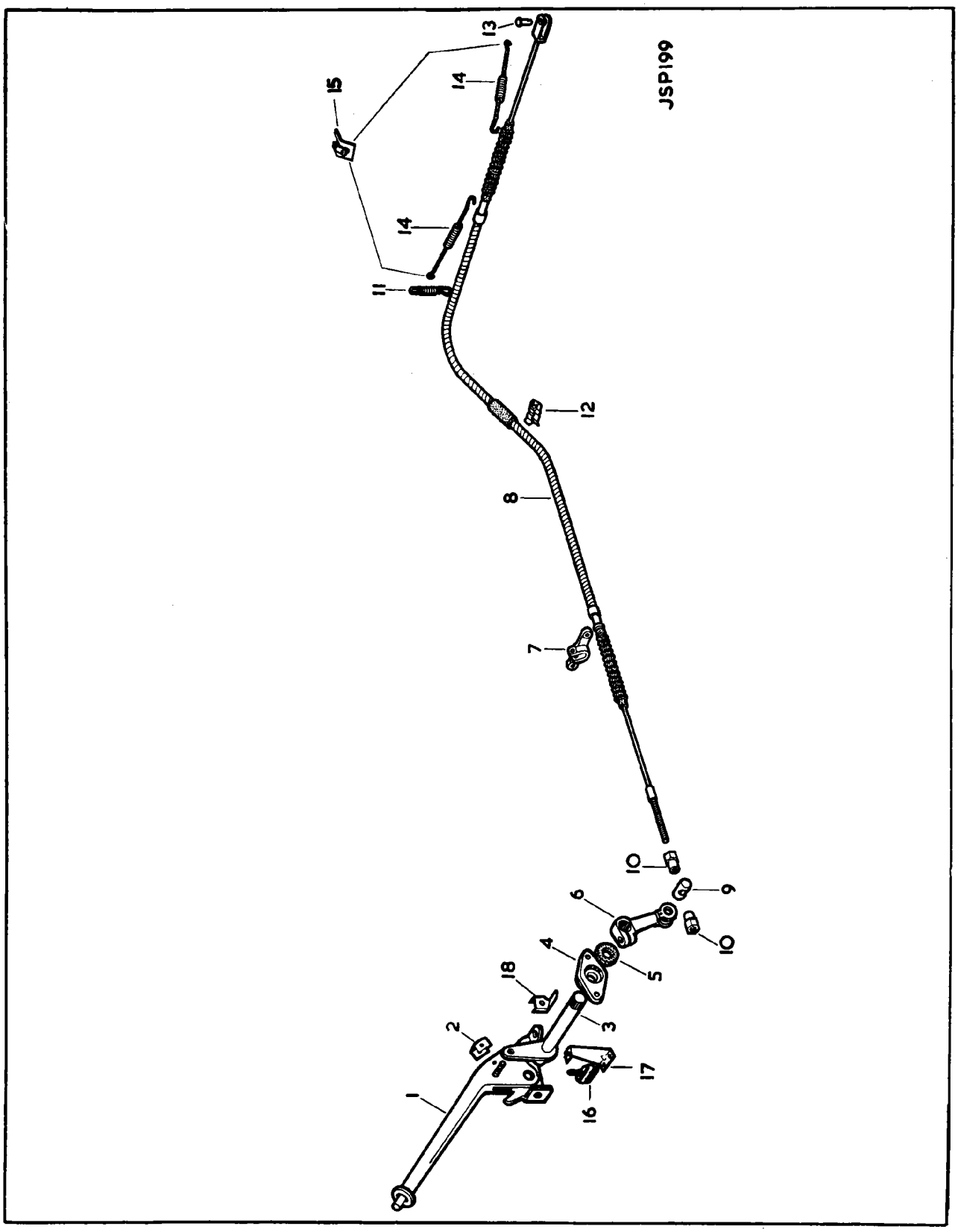

PLATE 37

ELECTRICAL EQUIPMENT

Part No.	Description	Plate No.	No. per Unit	Remarks
C.25073	**ALTERNATOR (54021081/D—11.AC)**	54—1	1	
10768	**Bolt,** through fixing (54112646)		3	
10769	**Nut,** for fixing Bolts (54131736)		3	
8586	**Nut,** on Shaft (198800)		1	
9365	**Washer,** under Shaft Nut (185085)		1	
2756	**Bearing** (189307)		1	
10770	**Bracket Frame,** Driving End (54215209)		1	
10771	**Rotor** (54214557)		1	
10772	**Bracket,** Slip Ring End (54216748)		1	
10773	**Heatsink** (complete with Cathode Base Diodes—Red) (54215074)		1	
10774	**Heatsink** (complete with Cathode Base Diodes—Black) (54210573)		1	
10775	**Brush, Spring, and Lucar** (54215076)		1 set	
10776	**Brushbox** (Bakelite) (54216364)		1	
8638	**Connector,** Lucar (Cut-out) (54190096)		1	
10777	**Stator** (54214441)		1	
C.22249	**Cooling Fan** (54214882)		1	
C.23123	**ALTERNATOR PULLEY**	54—2	1	
C.23138	**BELT, DRIVING ALTERNATOR**		1	
C.24642	**BRACKET ASSEMBLY, MOUNTING ALTERNATOR**	54—3	1	
UFS.143/6R	**Screw,** Set, securing Bracket to Cylinder Block		1	
UFS.143/7R	**Screw,** Set, securing Bracket to Cylinder Block		1	
FG.107/X	**Washer,** Spring, on Setscrews		2	
C.24645	**ADJUSTING STRAP, FOR ALTERNATOR**	54—4	1	
UFB.137/24R	**Bolt,** securing Alternator and Adjusting Strap to Mounting Bracket		1	
FG.106/X	**Washer,** Spring, on Bolt		1	
UFS.131/7R	**Screw,** Set, securing Adjusting Strap to Alternator		1	
FG.105/X	**Washer,** Spring, on Setscrew		1	
C.19317	**Distance Piece,** between Strap and Alternator	54—5	1	
C.17343	**Barrel Nut,** securing Adjusting Strap to Bracket on Front Timing Cover		1	
FG.105/X	**Washer,** Spring, under Barrel Nut		1	
FW.105/T	**Washer,** Plain, under Spring Washer		1	

SECTION 48

ELECTRICAL EQUIPMENT

Part No.	Description	Plate No.	No. per Unit	Remarks
C.27178	**STARTER MOTOR (26252/A—M.45G)**	54—6	1	
11042	**Bolt,** through fixing (54257814)		2	
2804	**Brushes** (255659)		1 set	
11043	**Bracket,** Commutator End (54252022)		1	
11044	**Bushing,** Commutator End (54252023)		1	
11045	**Spring,** for Brush Tension (54257221)		1 set	
11046	**Pin,** Pivot (272548)		1	
11047	**Drive,** Roller Clutch (54252015)		1	
11048	**Bracket,** Driving End (54256827)		1	
11049	**Bushing,** Driving End (54255190)		1	
11050	**Bracket,** Intermediate (54251856)		1	
11051	**Bushing,** Intermediate (54251857)		1	
11460	**Thrust Washer,** Drive End (54250985)		1	
11320	**Thrust Washer** (Steel) Commutator End (54257834)		1	
11321	**Thrust Washer** (Fibre) Commutator End (54140176)		1	
11053	**Armature** (54252007)		1	
11054	**Solenoid** (76706)		1	
11055	**Bush** (54251942)		1	
11056	**Collar,** Spacing (54251943)		1	
11057	**Field Coils** (271148)		1 set	
C.22488	**SPIGOT PLATE FOR STARTER MOTOR**	54—7	1	
C.22489	**Ring Dowel,** locating Spigot Plate	54—8	2	
UFB.137/13R	**Bolt,** securing Starter Motor and Spigot Plate to Clutch Housing		2	
FG.106/X	**Washer,** Spring, on Bolts		2	
C.23684	**IGNITION COIL (45169/B—HA.12)**	54—9	1	
C.5451	**Nut,** in centre of Coil, for attachment of High Tension Lead (408120)	54—10	1	
C.5452	**Washer** (Copper) at end of Lead (185015)	54—11	1	
C.2607	**Sleeve** (Rubber) on High Tension Lead at Coil (414965)		1	
UFS.125/4R	**Screw,** Set, securing Coil to R.H. Valance		2	
C.724	**Washer,** Shakeproof, on Setscrews		2	
FW.104/T	**Washer,** Plain, under Shakeproof Washers		2	
C.25285	**DISTRIBUTOR (41060/A—22.D6)**	54—12	1	
C.11906	**Nut,** for connection of High Tension Leads (410600)	54—13	7	
C.5452	**Washer** (Copper) at end of High Tension Leads (185015)	54—14	7	
6476	**Clamping Plate** (423605)		1	
6477	**Screw,** for Clamping Plate (415087)		1	
9930	**Cap** (54414989)	54—15	1	
6479	**Brush and Spring,** inside Cap (418856)	54—16	1	
6060	**Rotor** (418726)	54—17	1	
9931	**Contact Set** (423153)	54—18	1	
6487	**Insulating Bush,** for Contact Breaker Lever (419950)		1	
C.11991	**Condenser** (423871)	54—19	1	
C.25287	**Waterproof Cover,** complete with Terminal, Bush, and Low Tension Lead (54417459)	54—20	1	
9933	**Insulating Washer,** for Terminal (161353)		1	
9934	**Earth Lead** (421088)		1	
9968	**Springs,** Auto-Advance (54415562)		1 set	
10520	**Weight,** Auto-Advance (54413073)		1	
6497	**Return Spring,** for Vacuum Unit (419086)		1	
9969	**Vacuum Unit** (54415894)		1	
9938	**Oil Seal** ("O" Ring) on Distributor Spigot (188639)		1	
9253	**Driving Dog** (420620)		1	
C.2607	**Sleeve** (Rubber) on Distributor Leads (414965)	54—21	7	

ELECTRICAL EQUIPMENT

Part No.	Description	Plate No.	No. per Unit	Remarks
C.27405	**SUPPRESSOR, IN DISTRIBUTOR CAP, RECEIVING NUT FOR HIGH TENSION LEAD (78120)**		6	**REQUIRED ONLY FOR CARS EXPORTED TO DENMARK**
BD.28607	**"O" Ring** (Rubber) between Suppressor and Nut		6	
C.21576	**SUCTION PIPE FROM FRONT CARBURETTER TO DISTRIBUTOR VACUUM UNIT**	54—22	1	**See also Carburetters and Petrol Filter**
C.21573	**Elbow** (P.V.C.) connecting Suction Pipe to Vacuum Unit	54—23	1	
C.22458	**PETROL PUMP (AUF.301)**	54—24	2	**See also Fuel System**
10202	**Coil Housing** (AUB.6080)	54—25	2	
9100	**Rocker and Blade Assembly** (AUB.6022)	54—26	2	
1145	**Terminal Screw** (AUA.1468)		2	
7664	**Condenser** (AUA.5060)	54—27	2	
7665	**Spring Clip,** holding Condenser (AUA.5059)	54—28	2	
10203	**End Cover** (AUB.707)	54—29	2	
10204	**Breather Elbow,** on End Cover (AUB.702)	54—30	2	
10205	**Cap,** for Breather (AUB.703)	54—31	2	
10206	**Bail,** under Cap (AUB.704)	54—32	2	
C.18916	**Lucar Blade,** for Feed and Earth Cable Connections to Pump (199279)		4	
10199	**Diaphragm Assembly** (AUB.6071)	54—33	2	
10201	**Roller,** for Diaphragm (AUA.1433)	54—34	22	
9320	**Spring,** for Diaphragm (AUB.521)	54—35	2	
10200	**Gasket,** under Diaphragm (AUB.706)	54—36	2	
AS.302/4D	**Screw,** Set, securing Coil Housing and Diaphragm to Valve Housing		12	
10186	**Valve Assembly** (AUB.6031)	54—37	4	
10188	**Filter,** for Inlet Valve (AUB.617)	54—38	2	
10767	**Sealing Washer,** for Valves and Filter (AUB.676)	54—39	6	
10189	**Cover,** for Valves (AUB.652)	54—40	4	
10190	**Plate,** retaining Valves (AUB.653)	54—41	2	
10191	**Screw,** Self-Tapping, securing Plate (AUB.597)		4	
10193	**Cover,** for end of Valve Housing (AUA.574)	54—42	2	
10192	**Gasket** (Cork) under Cover (AUA.573)	54—43	2	
5803	**Screw,** securing Cover (AUC.2694)		2	
5648	**Washer,** Spring, on Screw (AUC.2246)		2	
10194	**Dished Washer,** under Spring Washer (AUA.575)		2	
10195	**Anti-Surge Diaphragm** (Nylon) (AUB.696)	54—44	2	
10198	**Sealing Washer,** under Diaphragm Plate (AUB.675)	54—45	2	
10196	**Backing** (Rubber) for Anti-Surge Diaphragm (AUB.693)	54—46	2	
10197	**"O" Ring,** under Diaphragm Cover (AUB.711)	54—47	2	
AS.304/3D	**Screw,** Set, securing Diaphragm Cover		8	
C.22547	**CLIP, AROUND PETROL PUMPS**		2	**See also Fuel System**
C.23361	**Rubber Packing,** inside Clips		2	
UFB.125/10R	**Bolt,** through Clips		2	
C.8667/1	**Nut,** Self-Locking, on Bolts		2	
C.22253	**CONTROL BOX (37423/A—4.TR)**	54—48	1	
UFS.319/4H	**Screw,** Set, securing Control Box to L.H. Front Wing Valance		2	

SECTION 48

ELECTRICAL EQUIPMENT

Part No.	Description	Plate No.	No. per Unit	Remarks
C.16053	**FUSE BOX (54038032—4.FJ)**	54—49	3	
C.5638	**Fuse,** 35 amp (188218)		12	
8576	**Terminal Screw** (120560)		3	
C.21996	**FUSE BOX (54038051—4.FJ)**	54—50	1	
C.5638	**Fuse,** 35 amp (188218)		2	
C.13932	**Fuse,** 50 amp (188219)		2	
8576	**Terminal Screw** (120560)		1	
UFS.319/4H	**Screw,** Set, securing Fuse Boxes to Brackets		4	
C.3377	**Washer,** Special, on Setscrews		4	
BD.25362	**BRACKET ASSEMBLY, MOUNTING FUSE BOXES**	54—51	2	
UFS.419/3H	**Screw,** Set, securing Brackets to Dash		4	
UFN.119/L	**Nut,** on Setscrews		4	
C.723/A	**Washer,** Shakeproof, under Nuts		4	
	CONNECTOR BLOCKS			
3571	**Connector Block** (Rubber) on Front Wing Valances (10-way) (850832)	54—52	2	
3570	**Connector Block** (Rubber) on L.H. Front Wing Valance (4-way) (850641)	54—53	1	
C.26808	**BRACKET FOR CONNECTOR BLOCKS**	54—54	2	
UCS.313/4H	**Screw,** Set, securing Brackets and Connector Blocks to Wing Valances		4	
UCN.113/L	**Nut,** on Setscrews		4	
C.721	**Washer,** Shakeproof, under Nuts		4	
C.27396	**INSTRUMENT PANEL ASSEMBLY**	55—1	1	
MJ.206/2R	**Woodscrew,** securing Instrument Facia to Panel		4	
UFS.419/4H	**Screw,** Set, securing Harness Clips to Instrument Panel		3	
C.723/A	**Washer,** Shakeproof, on Setscrews		3	
UCN.116/L	**Nut,** securing Lighting Switch and Voltage Control Unit		4	
BD.541/29	**Washer,** Special, under Nuts		4	
C.26806	**Fuse Indicator Plate**	55—2	1	
MJ.206/2R	**Woodscrew,** securing Fuse Indicator Plate		2	
C.16258	**Pivot Screw,** for Instrument Panel		2	
C.782	**Washer** (Fibre) on Pivot Screws		2	
C.16318	**Bush** (Nylon) on Pivot Screws		2	
C.27398	**Screw,** Knurled, securing Instrument Panel	55—3	2	
BD.5453	**Washer** (Black Fibre) on Knurled Nut	55—4	2	
C.22037	**Trim** (Vulkhide) for Panel		1	
C.25937	**LIGHT FILTER FOR SWITCH INDICATOR STRIP**	55—5	1	
C.22040	**CHROME FINISHER AT TOP OF INDICATOR STRIP**	55—6	1	

Part No.	Description	Plate No.	No. per Unit	Remarks
C.22038	**INDICATOR STRIP, AT BOTTOM OF INSTRUMENT PANEL, DETAILING SWITCH POSITIONS**	55—7	1	**R.H. DRIVE CARS ONLY**
C.22039	**INDICATOR STRIP, AT BOTTOM OF INSTRUMENT PANEL, DETAILING SWITCH POSITIONS**		1	**L.H. DRIVE CARS ONLY**
DZZ.408/6C	**Screw**, Self-Tapping, securing Indicator Strip, Chrome Finisher, and Light Filter to Instrument Panel		4	
C.15787	**Bulb** (2 watt, Lilliput) illuminating Indicator Strip (281)		3	
C.22258	**IGNITION SWITCH (34679/A—110.SA)**	55—8	1	
9401	**Locking Ring** (Chrome) (54130301)		1	
BD.10610	**Barrel**, for Ignition Switch (WB.1/6545)	55—9	1	
C.15667	**Adaptor**, fixing Ignition Switch (54332197)	55—10	1	
C.18574	**ROAD LAMPS SWITCH (34436/B—PRS.7)**	55—11	1	**NOT REQUIRED WHEN FOG LAMPS ARE FITTED**
C.15449	**Escutcheon**, for Road Lamps Switch (54850094)	55—12	1	
C.20246	**ROAD LAMPS SWITCH (34437/A—PRS.7)**		1	**FOR USE WHEN FOG LAMPS ARE FITTED**
C.15447	**Escutcheon**, for Road Lamps Switch (54850095)		1	
C.18929	**Hollow Bolt**, securing Escutcheon (54336441)	55—13	1	
C.15451	**Nut**, on Bolt (156574)	55—14	1	
C.15928	**Washer**, under Nut (154604)	55—15	1	
C.27065	**LEVER, OPERATING ROAD LAMPS SWITCH (54324881)**	55—16	1	
C.17513/1	**Sleeve** (P.V.C.) for Lever		1	
C.16072	**STARTER SWITCH (34263/B—SS.5)**	55—17	1	
C.15455	**PANEL LAMPS SWITCH (31969/D—57.SA)**	55—18	1	
C.15589	**HEATER FAN SWITCH (31960/D—57.SA)**	55—19	1	
C.15456	**WINDSCREEN WIPER SWITCH (31966/F—79.SA)**	55—20	1	
C.15759	**WINDSCREEN WASHER SWITCH (31984/D—65.SA)**	55—21	1	

SECTION 48

ELECTRICAL EQUIPMENT

Part No.	Description	Plate No.	No. per Unit	Remarks
C.15589	**INTERIOR / MAP LAMP SWITCH (31960/D—57.SA)**	55—22	1	
C.17191	**FUEL CHANGE - OVER SWITCH (34425/E—45.SA)**	55—23	1	
C.27329	**AMMETER (36384/B—CZU.60)**	55—24	1	
C.26894	**Strap,** fixing Ammeter in Instrument Panel (54361199)	55—25	1	
987	**Bulb,** illuminating Ammeter (987)		1	
C.16897	**Bulb Holder** (54947338)		1	
C.26791	**PETROL GAUGE (BF.2200/10)**	55—26	1	
987	**Bulb,** illuminating Petrol Gauge (987)		1	
C.16897	**Bulb Holder** (54947338)		1	
C.26211	**GAUGE ELEMENT UNIT IN R.H. PETROL TANK (TBS.5114/001)**	55—27	1	
C.26212	**GAUGE ELEMENT UNIT IN L.H. PETROL TANK (TBS.5114/001)**	55—28	1	**See also Fuel System**
C.22054	**Rubber Seal,** between Element Units and Petrol Tanks (31/781/538)	55—29	2	
C.22053	**Locking Ring,** securing Element Units (31/634/583/01)	55—30	2	
C.25515	**OIL PRESSURE GAUGE (PE.2300/07)**	55—31	1	
C.15474	**Electric Element,** on Oil Cleaner, for Oil Pressure Gauge (PT.1801/06)	55—32	1	
C.26899	**Washer** (Copper) on Element		1	
C.15288	**Lucar Blade,** for Cable connection to Oil Pressure Gauge (54190107)	55—33	1	
987	**Bulb,** illuminating Oil Pressure Gauge (987)		1	
C.16897	**Bulb Holder** (54947338)		1	
C.25516	**WATER TEMPERATURE GAUGE (BT.2200/03)**	55—34	1	
C.15472	**Electric Element,** at top of Inlet Manifold, for Water Temperature Gauge (TT.4801/00)	55—35	1	
C.785	**Washer** (Fibre) on Element		1	
987	**Bulb,** illuminating Water Temperature Gauge (987)		1	
C.16897	**Bulb Holder** (54947338)		1	
C.27053	**VOLTAGE CONTROL UNIT AT BACK OF INSTRUMENT PANEL (BR.1307/00)**	55—36	1	

Part No.	Description	Plate No.	No. per Unit	Remarks
C.15789	**LUCAR CONNECTOR, EARTHING INSTRUMENT PANEL (54190038)**	55—37	2	
C.26789	**ELECTRIC CLOCK (TRANSISTORIZED) (CET.3504/00)**	55—38	1	
C.15787	**Bulb** (2 watt, Lilliput) illuminating Clock (281)		1	
C.27330	**Strap,** fixing Clock in Screen Rail (31/674/351/01)	55—39	1	
C.27103	**DRY BATTERY, DRIVING ELECTRIC CLOCK (40/688/340)**	55—40	1	
C.26790	**BATTERY HOLDER AND CABLE (41/419/101/06)**	55—41	1	
DAZ.406/6C	**Screw,** Set, securing Battery Holder behind Screen Rail		1	
BD.8633/4	**Spire Nut,** receiving Self-Tapping Screw		1	
C.27088	**SPEEDOMETER (SN.6326/67) (CALIBRATED IN MILES)**	55—42	1	**FOR USE WITH 3.31 : 1 FINAL DRIVE RATIO AND 185 x 15 SP.41 TYRES**
C.27089	**SPEEDOMETER (SN.6326/68) (CALIBRATED IN KILOS)**		1	
C.27090	**SPEEDOMETER (SN.6326/65) (CALIBRATED IN MILES)**		1	**FOR USE WITH 3.31 : 1 FINAL DRIVE RATIO AND 6.40 x 15 RS.5 TYRES**
C.27091	**SPEEDOMETER (SN.6326/66) (CALIBRATED IN KILOS)**		1	
987	**Bulb,** illuminating Speedometer, and for Ignition and Headlamp Main Beam Warning Lamps (987)		4	
C.16898	**Bulb Holder** (54360731)		2	
	NOTE: To ensure that the correct Speedometer is supplied by Jaguar Spares Division IT IS IMPORTANT, WHEN ORDERING, to quote the number printed on the dial of the displaced instrument. **On some specially calibrated instruments, the number is printed on the back of the Speedometer Casing.**			
C.24169	**CONTROL UNIT, ON L.H. FRONT WING VALANCE, FOR IGNITION WARNING LAMP IN SPEEDOMETER (38706/A—3.AW)**	55—43	1	
UFS.125/4R	**Screw,** Set, securing Control Unit		1	
C.724	**Washer,** Shakeproof, on Setscrews		1	
FW.104/T	**Washer,** Plain, under Shakeproof Washers		1	

SECTION 48

ELECTRICAL EQUIPMENT

Part No.	Description	Plate No.	No. per Unit	Remarks
C.22738	**REMOTE CONTROL, OPERATING TRIP MILEAGE RECORDER ON SPEEDOMETER (41/741/162/01/8)**	55—44	1	**R.H. DRIVE CARS ONLY**
8409	**Screwed Escutcheon,** securing Remote Control at Winding End		1	
C.22663	**REMOTE CONTROL, OPERATING TRIP MILEAGE RECORDER ON SPEEDOMETER (41/741/162/01/7)**		1	**L.H. DRIVE CARS ONLY**
8409	**Screwed Escutcheon,** securing Remote Control at Winding End		1	
C.22639	**Bracket,** for Remote Control	55—45	1	
MJ.206/3R	**Woodscrew,** securing Bracket to Facia		2	
C.15929	**FLEXIBLE SPEEDOMETER CABLE COMPLETE (DF.1104/19/Z.66)**	55—46	1	**R.H. DRIVE CARS ONLY**
8241	**Inner Cable only** (DI.1110/00/Z.66)		1	
8242	**Outer Cable only** (DO.1104/18/66)		1	
C.25249	**FLEXIBLE SPEEDOMETER CABLE COMPLETE (DF.1104/19/Z.90)**		1	**L.H. DRIVE CARS ONLY**
11074	**Inner Cable only** (DI.1110/00/Z.90)		1	
11075	**Outer Cable only** (DO.1104/18/90)		1	
C.26802	**REV. COUNTER (TRANSISTORIZED) (RVI.4610/01)**	55—47	1	
987	**Bulb,** illuminating Rev. Counter (987)		2	
C.16987	**Bulb Holder** (54947338)		2	
C.18638	**CIGAR LIGHTER COMPLETE (L.15904—12V.)**	55—48	1	
C.18638/1	**Switch Base Assembly** (LBA.31075-12V)		1	
C.18638/2	**Element** (LHA.30882-12V)		1	
C.18638/3	**Clamping Shell** (LU.30669-4)		1	
C.18638/4	**Handle** (LEA.30578-1)		1	
C.18638/5	**Chrome Bezel** (LH.30843-1)		1	
C.15288	**Lucar Blade,** for Cigar Lighter Connection (54190107)		1	
C.18916	**Lucar Blade,** earthing Cigar Lighter (199279)		1	
C.16661	**WARNING LAMP FOR HANDBRAKE AND BRAKE FLUID LEVEL (38220/A—WL.3/1)**	55—49	1	
987	**Bulb** (987)		1	
C.19637	**Escutcheon,** for Warning Lamp ("Handbrake" "Brake Fluid")	55—50	1	
C.16184	**Bracket,** for Warning Lamp	55—51	1	
MJ.206/3R	**Woodscrew,** securing Bracket		2	

Part No.	Description	Plate No.	No. per Unit	Remarks
C.12833	**SWITCH, OPERATING HANDBRAKE WARNING LAMP (31504/D—12.SA)**	55—52	1	**See also Handbrake Control**
UFN.125/L	**Nut,** securing Switch to Bracket on Floor		2	
C.19100	**WARNING LAMP FOR SIDELAMPS (54361267—WL.13)**		1	**FOR CARS EXPORTED TO ITALY**
8826	**Shade** (319222)		1	
9294	**Cover and Window** (54360914)		1	
987	**Bulb** (987)		1	
11217	**Bulb Holder** (863511)		1	
C.17552	**OUTER HEADLAMP, COMPLETE (58811—F.700)**		2	
10217	**Sealed Beam Unit** (54521872)	56—1	2	
9266	**Plate,** retaining Sealed Beam Unit (54521913)	56—2	2	
5221	**Screw,** securing Plate (186137)		6	
9271	**Rim,** seating Sealed Beam Unit (54521538)		2	
7764	**Adaptor** (553738)	56—3	2	
9404	**Spring,** retaining Seating Rim (54520514)		2	
9405	**Trimmer Screw,** for Beam Adjustment (54520451)		4	
11453	**Retainer,** for Trimmer Screws (54522798)		4	
9267	**Gasket,** seating Headlamp Body (54520505)	56—4	2	
C.18180	**Embellisher Rim,** for Outer Headlamps (54521146)	56—5	2	
C.18179	**Clip,** securing Embellisher Rims (54521222)	56—6	4	
				FOR UNITED KINGDOM ONLY
C.26945	**INNER HEADLAMP, COMPLETE (59739/A—5¾)**		2	
11454	**Sealed Beam Unit** (54522973)	56—7	2	
9264	**Rim,** retaining Sealed Beam Unit (54520356)	56—8	2	
5221	**Screw,** securing Rim (186137)		6	
11455	**Rim,** seating Sealed Beam Unit (54523537)		2	
7764	**Adaptor** (553738)	56—9	2	
11456	**Trimmer Screw,** for Beam Adjustment (54520384)		4	
11457	**Sleeve,** on Trimmer Screws (54520216)		4	
11458	**Clip,** securing Embellisher Rim (54521221)		2	
9265	**Gasket,** seating Headlamp Body (54520217)	56—10	2	
BD.29622	**Embellisher Rim,** for Inner Headlamps (54523419)	56—11	2	
C.27015	**OUTER HEADLAMP, COMPLETE (59702/A—F.700)**		2	
7763	**Bulb** (410)		2	
7765	**Spring,** retaining Bulb (556442)		2	
	Other items are as for Headlamp C.17552 except that Light Unit is not supplied			**FOR R.H. DRIVE CARS EXPORTED TO SWEDEN**
9267	**Gasket,** seating Headlamp Body (54520505)		2	
C.18180	**Embellisher Rim,** for Outer Headlamps (54521146)		2	
C.18179	**Clip,** securing Embellisher Rims (54521222)		2	

ELECTRICAL EQUIPMENT

Part No.	Description	Plate No.	No. per Unit	Remarks
C.17553	**INNER HEADLAMP, COMPLETE (58991/A—5¾)**		2	FOR R.H. DRIVE CARS EXPORTED TO SWEDEN
9168	**Sealed Beam Unit** (54521805)		2	
9270	**Rim,** seating Sealed Beam Unit (54520209)		2	
	All other items are as for Headlamp C.26945			
BD.29622	**Embellisher Rim,** for Inner Headlamps (54523419)		2	
C.17552	**OUTER HEADLAMP, COMPLETE (58811—F.700)**		2	FOR ALL R.H. DRIVE CARS EXCEPT THOSE EXPORTED TO SWEDEN AND THOSE SUPPLIED IN UNITED KINGDOM
	For Individual items see Headlamp C.17552			
9267	**Gasket,** seating Headlamp Body (54520505)		2	
C.18180	**Embellisher Rim,** for Outer Headlamps (54521146)		2	
C.18179	**Clip,** securing Embellisher Rims (54521222)		4	
C.17553	**INNER HEADLAMP, COMPLETE (58991/A—5¾)**		2	
9168	**Sealed Beam Unit** (54521805)		2	
9270	**Rim,** seating Sealed Beam Unit (54520209)		2	
	All other items are as for Headlamp C.26945			
BD.29622	**Embellisher Rim,** for Inner Headlamps (54523419)		2	
C.17555	**OUTER HEADLAMP, COMPLETE (58814—F.700)**		2	FOR L.H. DRIVE CARS ONLY Refer to list on page 48—12 for countries affected
7762	**Light Unit** (54522683)		2	
7763	**Bulb** (410)		2	
7765	**Spring,** retaining Bulb (556442)		2	
	All other items are as for Headlamp C.17552			
9267	**Gasket,** seating Headlamp Body (54520505)		2	
C.18180	**Embellisher Rim,** for Outer Headlamps (54521146)		2	
C.18179	**Clip,** securing Embellisher Rims (54521222)		4	
C.17553	**INNER HEADLAMP, COMPLETE (58991/A—5¾)**		2	
9168	**Sealed Beam Unit** (54521805)		2	
9270	**Rim,** seating Sealed Beam Unit (54520209)		2	
	All other items are as for Headlamp C.26945			
BD.29622	**Embellisher Rim,** for Inner Headlamps (54523419)		2	

Part No.	Description	Plate No.	No. per Unit	Remarks
C.17559	**OUTER HEADLAMP, COMPLETE (58815—F.700)**		2	
7762	**Light Unit** (54522683)		2	
8612	**Bulb** (411)		2	
7765	**Spring,** retaining Bulb (556442)		2	
	All other items are as for Headlamp C.17552			
9267	**Gasket,** seating Headlamp Body (54520505)		2	
C.18180	**Embellisher Rim,** for Outer Headlamps (54521146)		2	
C.18179	**Clip,** securing Embellisher Rims (54521222)		4	**FOR L.H. DRIVE CARS ONLY** Refer to List on page 48—12 for countries affected
C.17560	**INNER HEADLAMP, COMPLETE (58725/B—5¾)**		2	
9306	**Sealed Beam Unit** (54520931)		2	
9270	**Rim,** seating Sealed Beam Unit (54520209)		2	
	All other items are as for Headlamp C.26945			
BD.29622	**Embellisher Rim,** for Inner Headlamps (54523419)		2	

Part No.	Description	Plate No.	No. per Unit	Remarks
C.23642	**OUTER HEADLAMP, COMPLETE (59191—F.700)**		2	
10465	**Sealed Beam Unit** (54522231)		2	
	All other items are as for Headlamp C.17552			
9267	**Gasket,** seating Headlamp Body (54520505)		2	
C.18180	**Embellisher Rim,** for Outer Headlamps (54521146)		2	
C.18179	**Clip,** securing Embellisher Rims (54521222)		4	**FOR L.H. DRIVE CARS ONLY** Refer to List on page 48—12 for countries affected
C.17553	**INNER HEADLAMP, COMPLETE (58991/A—5¾)**		2	
9168	**Sealed Beam Unit** (54521805)		2	
9270	**Rim,** seating Sealed Beam Unit (54520209)		2	
	All other items are as for Headlamp C.26945			
BD.29622	**Embellisher Rim,** for Inner Headlamps (54523419)		2	

ELECTRICAL EQUIPMENT

Part No.	Description	Plate No.	No. per Unit	Remarks
C.17561	**OUTER HEADLAMP, COMPLETE (58722/B—5¾)**		2	
9264	**Rim,** retaining Sealed Beam Unit 54520356)		2	
5221	**Screw,** securing Rim (186137)		6	
7764	**Adaptor** (553738)		2	
11456	**Trimmer Screw,** for Beam Adjustment (54520384)		4	
9269	**Rim,** seating Sealed Beam Unit (54520210)		2	
9265	**Gasket,** seating Lamp (54520217)		2	
11457	**Sleeve,** on Trimmer Screws (54520216)		4	
11458	**Clip,** securing Embellisher Rim (54521221)		2	
C.18182	**Embellisher Rim,** for Outer Headlamps (54521148)		2	**FOR L.H. DRIVE CARS EXPORTED TO U.S.A. CANADA, HAWAII, ITALY AND ITALIAN SOMALILAND**
C.17562	**INNER HEADLAMP, COMPLETE (58720/D—5¾)**		2	
9270	**Rim,** seating Sealed Beam Unit (54520209)		2	
	All other items are as for Headlamp C.17561			
BD.29622	**Embellisher Rim,** for Inner Headlamps (54523419)		2	
DAZ.408/10C	**Screw,** Self-Tapping, for Headlamp Mounting		16	
BD.8536/1	**Spire Nut,** receiving Self-Tapping Screws		16	
DJ.610/12S	**Screw,** Self-Tapping, securing Embellisher Rims		4	**2 ONLY REQUIRED FOR U.S.A.**
BD.8633/2	**Spire Nut,** receiving Self-Tapping Screws		4	
DJ.610/16S	**Screw,** Self-Tapping, securing Embellisher Rim		2	**FOR U.S.A. ONLY**

HEADLAMP APPLICABILITY — L.H. DRIVE CARS ONLY

PART No.	FOR USE IN
C.17555, C.17553	Angola, Austria, Belgium, Belgian Congo, Canary Islands, Curacao, Cyrenaica, Denmark, Eritrea, Finland, Germany, Gibraltar, Greece, Holland, Iceland, India, Indonesia, Libya, Luxembourg, Madeira, Majorca, Norway, Portugal, Spain, Spanish Guinea, Switzerland, and Viet-nam (South)
C.17559, C.17560	Algeria, France, French Somaliland, French West Africa, Madagascar, Morocco, Reunion (Island of), Tahiti, Tangiers and Tunisia
C.23642, C.17553	Argentine, Brazil, Chile, Colombia, Cuba, Dominican Republic, Ecuador, Egypt, El Salvador, Ethiopia, Guatemala, Haiti, Iran, Iraq, Israel, Jordan, Lebanon, Mexico, Newfoundland, Nicaragua, Panama, Paraguay, Persian Gulf, Peru, Phillipines, Portugese East Africa, Puerto Rico, Saudi Arabia, Sudan, Syria, Turkey, Uruguay and Venezuela

C.19911	**HEADLAMP ADAPTOR PLATE**		2	**FOR USE WITH HEADLAMP C.17561 ONLY**
DJN.608/8C	**Screw,** Self-Tapping, securing Adaptor Plate		8	
BD.8536/1	**Spire Nut,** receiving Self-Tapping Screws		8	

Part No.	Description	Plate No.	No. per Unit	Remarks
C.22044	**HEADLAMP DIPPER SWITCH (34536/D—103.SA)**	56—12	1	
C.22276	**Rubber Cap,** for Dipper Switch (54339495)	56—13	1	
UFS.319/4H	**Screw,** Set, securing Dipper Switch to Bracket		2	
C.723/A	**Washer,** Shakeproof, on Setscrews		2	
C.27449	**Bracket Assembly,** mounting Dipper Switch		1	R.H. DRIVE CARS ONLY
UFS.119/4R	**Screw,** Set, securing Bracket and Blanking Plate to Dash		3	
UFN.119/L	**Nut,** on Setscrew for Blanking Plate		1	
C.723/A	**Washer,** Shakeproof, on Setscrews and under Nut		3	
C.4580	**Blanking Plate,** sealing redundant hole at R.H. side of Dash		1	
C.4578	**Gasket,** under Blanking Plate		1	
C.22043	**Bracket Assembly,** mounting Dipper Switch		1	L.H. DRIVE CARS ONLY
UFS.119/4R	**Screw,** Set, securing Bracket to Dash		2	
C.723/A	**Washer,** Shakeproof, on Setscrews		2	
C.4580	**Blanking Plate,** sealing redundant hole at R.H. side of Dash		1	
C.4578	**Gasket,** under Blanking Plate		1	
UFS.119/4R	**Screw,** Set, securing Blanking Plate to Dash		2	
UFN.119/L	**Nut,** on Setscrews		2	
C.723/A	**Washer,** Shakeproof, under Nuts		2	
C.21538	**SIDELAMP, COMPLETE (54047170—461/1)**		2	
9683	**Gasket,** seating Lamp (54572661)	56—14	2	
9283	**Rim,** complete with Glass and Reflector (54572667)	56—15	2	
10220	**Bulb Holder** (54573590)	56—16	2	
3455	**Interior,** for Bulb Holder (553780)		2	
10221	**Seating Ring,** for Bulb Holder (554354)		2	
989	**Bulb** (989)		2	
C.18602	**Screw,** Long, securing Sidelamps		2	
C.18603	**Screw,** Short, securing Sidelamps		2	
C.19851	**Sleeve,** on Screws		4	
BD.21135	**Cage Nut,** receiving Screws		4	
C.18194	**BEZEL, FOR SIDELAMPS (54572869)**	56—16A	2	
C.21534	**R.H. FRONT FLASHER LAMP (52637/B—690)**		1	NOT REQUIRED FOR CARS EXPORTED TO FRANCE, FRENCH SOMALILAND, FRENCH WEST AFRICA, HOLLAND, ITALY, ITALIAN SOMALILAND, MADAGASCAR, REUNION (ISLAND OF), TAHITI OR U.S.A.
9255	**Lens** (Amber) (54572518)	56—17	1	
9256	**Screw,** securing Lens (54100481)		1	
9257	**Gasket,** seating Lens (54572283)	56—18	1	
6538	**Interior,** Bulb Holder (573832)	56—19	1	
C.9126	**Bulb** (382)		1	
9258	**Gasket,** seating Lamp (54572522)	56—20	1	
9259	**Body** (54572519)	56—21	1	
C.21535	**L.H. FRONT FLASHER LAMP (52638/B—690)**		1	
9260	**Lens** (Amber) (54572282)		1	
10210	**Gasket,** seating Lamp (54572284)		1	
9261	**Body** (54572285)		1	
	All other items are as for R.H. Front Flasher Lamp C.21534			

SECTION 48

ELECTRICAL EQUIPMENT

Part No.	Description	Plate No.	No. per Unit	Remarks
C.21536	**R.H. FRONT FLASHER LAMP (52639/B—690)**		1	FITTED TO CARS EXPORTED TO FRANCE, FRENCH SOMALILAND, FRENCH WEST AFRICA, HOLLAND, ITALY, ITALIAN SOMALILAND, MADAGASCAR, REUNION (ISLAND OF), TAHITI OR U.S.A.
9262	**Lens** (Clear) (54572657)		1	
	All other items are as for R.H. Front Flasher Lamp C.21534			
C.21537	**L.H. FRONT FLASHER LAMP (52640/B—690)**		1	
9263	**Lens** (Clear) (54572656)		1	
10210	**Gasket**, seating Lamp (54572284)		1	
9261	**Body** (54572285)		1	
	All other items are as for R.H. Front Flasher Lamp C.21534			
C.19475	**Strap**, front, fixing R.H. Front Flasher Lamp	56—22	1	
C.19473	**Strap**, rear, fixing R.H. Front Flasher Lamp	56—23	1	
C.19474	**Strap**, front, fixing L.H. Front Flasher Lamp		1	
C.19658	**Strap**, rear, fixing L.H. Front Flasher Lamp		1	
UFN.119/L	**Nut**, securing Front Flasher Lamps		6	
C.723/A	**Washer**, Shakeproof, under Nuts		6	
C.21795	**Rubber Sleeve** ($\frac{5}{8}$" long) between Front Straps and Lamps (54574592)		4	
C.21796	**Rubber Sleeve** ($\frac{7}{16}$" long) between Rear Straps and Lamps (54574593)		2	
C.26059	**R.H. STOP/TAIL/FLASHER LAMP (RED/AMBER) (53935/E—687)**		1	NOT REQUIRED FOR CARS EXPORTED TO U.S.A.
9285	**Lens**, Flasher (54573423)	56—24	1	
9287	**Lens**, Stop/Tail (54571778)	56—25	1	
9284	**Shield**, dividing Flasher Lens from Stop/Tail Lens (54572171)	56—26	1	
9288	**Gasket**, seating Lens (54571780 or 54574925)	56—27	1	
9289	**Bulb Holder**, Flasher (556284)	56—28	1	When Bulb Holder is required, use also Interior C.4653
C.4653	**Interior**, Flasher Bulb Holder (552103)		1	
6538	**Interior**, Flasher Bulb Holder (573832)		1	This item must be fitted when interior only requires replacement
C.9126	**Bulb**, Flasher (382)		1	
9290	**Bulb Holder**, Stop/Tail (555384)	56—29	1	When Bulb Holder is required, use also Interior 3427
3427	**Interior**, Stop/Tail Bulb Holder (552101)		1	
5311	**Interior**, Stop/Tail Bulb Holder (573828)		1	This item must be fitted when the interior only requires replacement
C.9125	**Bulb**, Stop/Tail (380)		1	
9291	**Reflex Reflector** (54572035)	56—30	1	
8621	**Washer**, seating Reflex Holder (54574922)	56—31	1	
9357	**Base** (54573565)	56—32	1	
9292	**Gasket**, seating Lamp (54571781)	56—33	1	
C.26060	**L.H. STOP/TAIL/FLASHER LAMP (RED/AMBER) (53934/E—687)**		1	NOT REQUIRED FOR CARS EXPORTED TO U.S.A.
9356	**Base** (54573564)		1	
	All other items are as for R.H. Stop/Tail/Flasher Lamp C.26059			

Part No.	Description	Plate No.	No. per Unit	Remarks
C.26061	**R.H. STOP/TAIL/FLASHER LAMP (RED/RED) (53937/E—687)**		1	**FITTED TO CARS EXPORTED TO U.S.A.**
9293	**Lens,** Flasher (54571777)		1	
	All other items are as for R.H. Stop/Tail/Flasher Lamp C.26059			
C.26062	**L.H. STOP/TAIL/FLASHER LAMP (RED/RED) (53936/E—687)**		1	**FITTED TO CARS EXPORTED TO U.S.A.**
9293	**Lens,** Flasher (54571777)		1	
9356	**Base** (54573564)		1	
	All other items are as for R.H. Stop/Tail/Flasher Lamp C.26059			
UFN.125/L	**Nut,** securing Stop/Tail/Flasher Lamps		6	
C.724	**Washer,** Shakeproof, under Nuts		6	
C.16062	**STOP LAMP SWITCH ON L.H. FRONT WING VALANCE (34542—2.SH)**	56—34	1	
C.16729	**FLASHER UNIT, BEHIND INSTRUMENT PANEL (35020/A—FL.5)**	56—35	1	
UFN.125/L	**Nut,** securing Flasher Unit to Screen Rail (behind Instrument Panel)		1	
C.724	**Washer,** Shakeproof, under Nut		1	
C.17188	**NUMBER PLATE ILLUMINATION AND REVERSE LAMP (53943/D—689)**		1	**NOT REQUIRED FOR CARS EXPORTED TO ALGERIA, FRANCE, FRENCH SOMALILAND, FRENCH WEST AFRICA, MADAGASCAR, MOROCCO, REUNION (ISLAND OF) TAHITI, OR TUNISIA**
9272	**Housing** (Chromium Plated) (54572564)	56—36	1	
9273	**Lens,** R.H. (54572340)	56—37	1	
9274	**Lens,** L.H. (54572341)	56—38	1	
9275	**Gasket,** seating Lens (54572460)	56—39	2	
9289	**Bulb Holder,** Reverse (556284)	56—40	2	**When Bulb Holder is required, use also Interior C.4653**
C.4653	**Interior,** Reverse Bulb Holder (552103)		2	
6538	**Interior,** Reverse Bulb Holder (573832)		2	**This item must be fitted when the Interior only requires replacement**
C.9126	**Bulb,** for Reverse Lamp (382)		2	
9277	**Bulb Holder,** Number Plate Illumination (54572554)	56—41	2	
3455	**Interior,** Number Plate Bulb Holder (553780)		2	
989	**Bulb,** Number Plate Illumination (989)		2	
9278	**Gasket,** R.H., seating Lamp (54572618)	56—42	1	
9279	**Gasket,** L.H., seating Lamp (54572682)	56—43	1	
	NOTE : Gaskets 9278 and 9279 are supplied in Pairs only, to Part No. 9278/9 (54573799)			

ELECTRICAL EQUIPMENT

Part No.	Description	Plate No.	No. per Unit	Remarks
C.17189	**NUMBER PLATE ILLUMINATION AND REVERSE LAMP (53944/D—689)**		1	FITTED TO CARS EXPORTED TO ALGERIA, FRANCE, FRENCH SOMALILAND, FRENCH WEST AFRICA, MADAGASCAR, MOROCCO, REUNION (ISLAND OF), TAHITI, OR TUNISIA
9280	**Lens,** R.H. (54572698)		1	
9281	**Lens,** L.H. (54572699)		1	
	All other items are as for Lamp C.17188			
UFN.125/L	**Nut,** securing Number Plate Illumination Lamp		4	
C.724	**Washer,** Shakeproof, under Nuts		4	
C.1083	**SWITCH, IN GEARBOX TOP COVER, OPERATING REVERSE LAMP (31542—SS.10/1)**	56—44	1	NOT REQUIRED WHEN AUTOMATIC TRANSMISSION IS FITTED See also Gearbox
C.4531	**Gasket,** under Switch (163682)	56—45	1	
C.18117	**CUBBY BOX LAMP (56078/D—681)**	56—46	1	
8851	**Lens** (54572189)		1	
7880	**Bulb** (12v. 6w. Festoon) (254)		1	
C.27708	**Bracket,** mounting Cubby Box Lamp		1	
C.18120	**Insulator,** for Cubby Box Lamp		1	
UCS.411/3H	**Screw,** Set, securing Lamp and Insulator to Bracket and Bracket to Cubby Box		6	
UCN.111/L	**Nut,** on Setscrews		6	
C.18118	**Switch,** operating Cubby Box Lamp (34379/E—54.SA)	56—47	1	
C.15288	**Lucar Blade,** for Cable Connection to Switch (54190107)		1	
C.19853	**Bracket,** mounting Switch to Facia		1	
MJ.206/3R	**Woodscrew,** securing Bracket		2	
C.19008	**Earth Strip,** for Switch		1	
C.19009	**Sleeve** (P.V.C.) on Earth Strip		1	
MJ.204/3R	**Woodscrew,** securing Earth Strip		1	
C.22255	**HORN (LOW NOTE) (54068078—9H)**	56—48	1	
10209	**Bracket,** on Horn (54680686)		1	
C.22254	**HORN (HIGH NOTE) (54068079—9H)**		1	
10209	**Bracket,** on Horn (54680686)		1	
C.23835	**Bracket Assembly,** mounting R.H. Horn		1	
C.23834	**Bracket Assembly,** mounting L.H. Horn		1	
UFS.125/4R	**Screw,** Set, securing Horns to Brackets		4	
C.8667/1	**Nut,** Self-Locking, on Setscrews, and securing Brackets to Front Suspension Cross Member		8	
C.26654	**HORN MUTE (RUBBER) IN HORN TRUMPET (54682523)**		2	FITTED ONLY TO CARS EXPORTED TO HOLLAND

Part No.	Description	Plate No.	No. per Unit	Remarks
C.17338	**HORN RELAY (33209/D—6.RA)**	56—49	1	
UFS.419/4H	**Screw,** Set, securing Horn Relay to R.H. Front Wing Valance		2	
C.723/A	**Washer,** Shakeproof, on Setscrews		2	
C.18979	**STEERING COLUMN HORN RING (33585/D—CC.2)**	56—50	1	
9021	**Spring,** for Horn Ring (54300943)		3	
C.18177	**Ring,** with Upper Contact (54300725)		1	
C.20530	**Screw,** securing Horn Ring (132504)		3	
C.20531	**Washer,** Special, on Screws (185007)		3	
C.22275	**HORN RING COVER ASSEMBLY (54300844/B)**		1	
C.22271	**Cover only** (54300845)	56—51	1	
C.22272	**Horn Push** (54301250)	56—52	1	
C.22273	**Return Spring,** for Horn Push (54301259)	56—53	1	
C.22274	**Contact Plate,** in Horn Push (54301256)		1	
UCS.416/9H	**Screw,** Set, securing Horn Ring Cover to Steering Wheel		4	
C.722	**Washer,** Shakeproof, on Setscrews		4	
C.16176	**CARRIER ASSEMBLY FOR CABLE TO STEERING COLUMN HORN RING**	56—54	1	
MJ.206/3R	**Woodscrew,** securing Carrier to Facia Board		2	
C.25555	**DIRECTION INDICATOR/HEADLAMP FLASHER SWITCH (35532/B-131.SA)**		1	
11316	**Striker Ring** (Nylon) (54322277)		1	
C.25668	**Insulation Strip,** for Switch		1	
BD.22686	**Stud** (Nylon) securing Insulation Strip		2	
C.16792	**UPPER SWITCH COVER ASSEMBLY AT CENTRE OF STEERING WHEEL (54360623)**	56—56	1	
C.15792	**Indicator Light Unit** (54360413)		1	
C.15927	**" Jaguar " Motif** (54360367)		1	
C.15787	**Bulb** (12v. 2w.) (281)		3	
8411	**Bulb Holder,** complete with Cables (54945043)		1	
8092	**Rubber Pad** (54360531)		1	
C.20794	**LOWER SWITCH COVER AT CENTRE OF STEERING WHEEL**	56—57	1	
BD.13713/2	**Screw,** Set, securing Lower Switch Cover to Steering Column		3	
C.16460	**Screw,** Set, clamping Upper and Lower Switch Covers together		2	
C.15830	**Washer,** Special, on Setscrews		5	

SECTION 48

ELECTRICAL EQUIPMENT

Part No.	Description	Plate No.	No. per Unit	Remarks
C.15486	**MAP LAMP, ABOVE INSTRUMENT PANEL (52477/A—481)**	56—58	1	
989	**Bulb,** for Map Lamp (989)		1	
MJ.204/3R	**Woodscrew,** securing Map Lamp to underside of Screen Rail		2	
10223	**WINDSCREEN WIPER MOTOR (75361/F—DR.3)**	57—1	1	**R.H. DRIVE CARS ONLY**
7187	**Brush Gear** (743171)		2	
3509	**Brushes** (729367)		1 set	
6551	**Spring,** for Brushes (735631)		2	
7188	**Cover,** End Terminals (743924)		1	
7189	**Armature** (743929)		1	
10225	**Coil** (54713957)		1	
10227	**Shaft and Gear** (748796)		1	
10226	**Connecting Rod** (748776)		1	
7192	**Limit Switch** (743846)		1	
7525	**Stud,** fixing Motor (743176)		1 set	
10224	**WINDSCREEN WIPER MOTOR (75374/F—DR.3)**		1	**L.H. DRIVE CARS ONLY**
	Individual items are as for Windscreen Wiper Motor 10223			
7193	**Rack and Crosshead** (744257)	57—2	1	
C.21964	**WHEELBOX ASSEMBLY FOR WINDSCREEN WIPERS (72784/D)**	57—3	2	
10228	**Spindle and Gear** (54713660)		2	
7767	**Front Bush** (Chromium Plated) (743889)		2	
7769	**Rubber Washer,** under Front Bush (740925)		2	
7768	**Rear Bush** (743890)		2	
10229	**Nut,** fixing Wheelbox (54130691)		2	
C.24106	**Insulator** (Fibre) on Windscreen Wiper Wheelbox		2	
C.26863	**OUTER CASING FROM WINDSCREEN WIPER MOTOR TO WHEELBOX (54700624)**	57—4	1	
C.5574	**Grommet,** in Dash, for Outer Casing (740811)		1	
C.8800	**OUTER CASING FROM WHEELBOX TO WHEELBOX (743819)**	57—5	1	
C.5450	**OUTER CASING, FOR WHEELBOX EXTENSION (740746)**	57—6	1	
10230	**ARM FOR WINDSCREEN WIPER (54711445)**	57—7	2	**R.H. DRIVE CARS ONLY**

Part No.	Description	Plate No.	No. per Unit	Remarks
10231	**ARM FOR WINDSCREEN WIPER (54711446)**		2	**L.H. DRIVE CARS ONLY**
10232	**BLADE FOR WINDSCREEN WIPER ARMS (54712820)**	57—8	2	
C.22304	**INTERIOR LAMP (6352)**	57—9	3	
10184	**Lens, Shield, and Plinth Assembly** (03737)		3	
10185	**Base Assembly** (03738)		3	
7880	**Bulb** (12v. 6w. Festoon) (254)		3	
DJJ.504/8C	**Screw,** Self-Tapping, securing Interior Lamp to Backlight Surround		2	
BD.8633/9	**Spire Nut,** receiving Self-Tapping Screws		2	
DZC.404/6C	**Screw,** Self-Tapping, securing Interior Lamps at top of 'B/C' Posts		4	
C.9653	**SWITCH, IN "A" AND "C" POSTS, OPERATING INTERIOR LAMPS FROM DOORS (535122)**	57—10	4	
C.13633	**Washer,** for Switches		4	
C.20697	**INTERIOR MIRROR (62577/K—608)**	57—11	1	
C.20697/1	**Base,** for Interior Mirror		1	
C.16407/2	**Head,** for Interior Mirror		1	
BD.13642/2	**Screw,** Set, securing Interior Mirror to Windscreen Header Rail		3	
C.18778	**BOOT LAMP (INCORPORATING MERCURY SWITCH) (54121/A—519)**	57—12	1	
989	**Bulb** (989)		1	
DZZ.406/6C	**Screw,** Self-Tapping, securing Boot Lamp to Boot Lid		2	
BD.21134	**Captive Nut,** receiving Self-Tapping Screws		2	
C.26807	**TWO - PIN PLUG AND SOCKET (38612/A)**	57—13	1	
UCS.411/8H	**Screw,** Set, securing Two-Pin Socket to Dash Front		2	
C.720	**Washer,** Shakeproof, on Setscrews		2	
C.26743	**BATTERY (54027357—S.11/9/8)**	57—14	1	
C.10192	**Felt,** between Battery and Dash (5" x 11")		1	

SECTION 48

ELECTRICAL EQUIPMENT

Part No.	Description	Plate No.	No. per Unit	Remarks
C.26782	**BATTERY TRAY (PLASTIC)**	57—15	1	
C.10640/1	**Drain Tube** (Rubber) for Battery Tray (27" long)	57—16	1	
C.27424	**BATTERY STRAP ASSEMBLY**	57—17	1	
C.10187	**Fixing Rod,** through Strap, securing Battery	57—18	2	
FG.204/X	**Washer,** Double Coil Spring, on Fixing Rods	57—19	2	
C.10188/1	**Pad** (Rubber) between Battery Strap and Battery (21" long)	57—20	1	
C.23685	**BATTERY CABLE (NEGATIVE TO EARTH) (54936004)**		1	
UFS.137/4R	**Screw,** Set, securing Battery Earth Cable to Body		1	
UFN.137/L	**Nut,** on Setscrew		1	
FW.106/T	**Washer,** Plain, on Setscrew		1	
C.726	**Washer,** Shakeproof, under Nut		1	
C.24496	**BATTERY CABLE (POSITIVE) FROM BATTERY TO TERMINAL POST (810609)**		1	
C.2609	**Screw,** securing Cables to Battery Posts (24188655)		2	
6826	**Screw** (Oversize) securing Cables to Battery Posts (186114)		2	**REQUIRED ONLY WHEN HOLES IN BATTERY POSTS ARE ENLARGED**
C.22257	**TERMINAL POST ASSEMBLY (54934338)**	57—21	1	
C.26809	**BRACKET, MOUNTING TERMINAL POST**	57—22	1	
UFS.419/4H	**Screw,** Set, securing Bracket to Dash		2	
C.723/A	**Washer,** Shakeproof, on Setscrews		2	
C.27009	**CABLE, FROM TERMINAL POST TO STARTER MOTOR (792528)**		1	
C.26963	**FORWARD HARNESS**		1	**R.H. DRIVE CARS ONLY**
C.26964	**FORWARD HARNESS**		1	**L.H. DRIVE CARS ONLY**
C.26965	**INSTRUMENT PANEL HARNESS**		1	**R.H. DRIVE CARS ONLY**
C.26966	**INSTRUMENT PANEL HARNESS**		1	**L.H. DRIVE CARS ONLY**

Part No.	Description	Plate No.	No. per Unit	Remarks
C.22069	**R.H. BODY HARNESS (54934738)**		1	
C.22070	**L.H. BODY HARNESS (54934739)**		1	
C.10092	**GEARBOX HARNESS (82809)**		1	
C.27188	**STEERING LOCK RELAY HARNESS**		1	**REQUIRED ONLY WHEN STEERING COLUMN LOCK IS FITTED**
C.24158	**STEERING LOCK RELAY (33252/A—6.RA)**		1	**See also Optional Extras**
DAZ.410/8C	**Screw,** Self-Tapping, securing Steering Lock Relay		2	
C.26344	**CONTROL PANEL ASSEMBLY FOR HAZARD WARNING DEVICE (30270)**		1	
11471	**Flasher Unit** (54362147)		1	
11215	**Switch** (35646/A—45.SA)		1	
11216	**Warning Lamp Assembly** (38726/A—WL.13)		1	
11217	**Bulb Holder** (863511)		1	
987	**Bulb** (987)		1	**REQUIRED ONLY FOR CARS EXPORTED TO U.S.A.**
DAC.410/8C	**Screw,** Self-Tapping, securing Control Panel to lower edge of L.H. Facia		2	
BD.8633/2	**Spire Nut,** receiving Self-Tapping Screws		2	
C.27599	**Cover,** around Hazard Warning Control Panel		1	
C.26347	**HARNESS FOR CONNECTION OF HAZARD WARNING DEVICE (54939672)**		1	
	ELECTRICAL CABLES			
C.26685	**Cable,** Panel Connector		1	
C.16917	**Cable,** Rev. Counter and Speedometer Illumination Lamp Connector (54947491)		1	
C.24468	**Cable,** Starter Switch Connector (54936384)		1	
C.27187	**Cable,** Steering Column Lock Connector to Instrument Panel Wiring		1	**REQUIRED ONLY WHEN STEERING COLUMN LOCK IS FITTED**
C.16004	**Cable,** Front Door Switch Connector (54944716)		2	
C.15652	**Cable,** Centre Pillar Interior Lamp Connector (54944609)		2	
C.17770	**Cable,** Cubby Box Lamp Connector (54948226)		1	
C.22461	**Cable,** Sidelamps Warning Lamp Connector (54934744)		1	**REQUIRED ONLY FOR CARS EXPORTED TO ITALY**
C.25508	**Cable,** Horn Link Connector		1	
C.26967	**Cable,** Reverse Lamp Switch Connector		1	
C.18650	**Cable,** Number Plate Lamp Connector (54930720)		1	
C.22945	**Cable,** R.H. Petrol Tank Gauge Unit Connector (54934810)		1	
C.22944	**Cable,** L.H. Petrol Tank Gauge Unit Connector (54934809)		1	

SECTION 48

ELECTRICAL EQUIPMENT

Part No.	Description	Plate No.	No. per Unit	Remarks
	EARTH CABLES			
C.19401	**Earth Cable,** from Engine to Body (54930710)		1	
C.22637	**Earth Cable,** for Instrument Panel (54934586)		1	
C.18699	**Earth Cable,** for Cigar Lighter (54949514)		1	
C.23522	**Earth Cable,** for Horns		2	
C.16179	**Earth Cable,** for Handbrake Warning Light Switch (54945031)		1	
	EARTH CONNECTIONS AND FIXINGS			
C.15789	**Lucar Blade,** earthing Instrument Panel (54190038)		2	
C.18916	**Lucar Blade,** earthing Cigar Lighter (199279)		1	
C.19008	**Earth Strip,** for Cubby Box Switch		1	
MJ.204/3R	**Woodscrew,** securing Cubby Box Earth Strip		1	
C.5204	**Earth Terminal,** under Connector Block Brackets on Front Wing Valances		4	
UFS.119/4R	**Screw,** Set, securing Earth Cable for Windscreen Wiper Motor to R.H. Front Wing Valance		1	
UFN.119/L	**Nut,** on Setscrew		1	
C.723/A	**Washer,** Shakeproof, under Nuts		1	
DZZ.408/6C	**Screw,** Self-Tapping, securing Fuel Pump Earth Cables to Body		2	
C.723/A	**Washer,** Shakeproof, on Self-Tapping Screws		2	
	RUBBER GROMMETS			
C.2706	**Grommet,** in Bulkhead, for Windscreen Washer Tube, Windscreen Wiper Cable, Speedometer Cable and Bonnet Lock Release Cable, and for Brake Pipes, Front Door Switch Cables, Petrol Tank Harness in Boot and Boot Lid Cable (859059)		12	
C.2869	**Grommet,** for Instrument Panel Connector (SIC-7071)		2	
C.5574	**Grommet,** in Bulkhead, for Windscreen Wiper Casing (740811)		1	
C.2850	**Grommet,** in Bulkhead, for Heater Control Cables (859341)		2	
C.2708	**Grommet,** in Front Wing Valances for Lamp Cables (859061)		2	
C.1426	**Grommet,** for Forward Harness (858066)		1	
C.974	**Grommet,** for Harness at Centre Pillars (858062)		2	
C.975	**Grommet,** for Harness at Centre Pillars (54190324)		2	
C.15749	**Grommet,** for Body Harness in Sills (54944431)		4	
C.2707	**Grommet,** for Body Harness in Sills and Boot Floor (859060)		3	
C.976	**Grommet,** for Body Harness in Boot (858064)		4	
C.17432	**Grommet,** for Petrol Pipe in Boot (863123)		1	
C.23035	**Grommet,** in Petrol Tank Gauge Unit Cover (859462)		2	
C.975	**Grommet,** for Steering Column Lock Connector (54190324)		1	**REQUIRED ONLY WHEN STEERING COLUMN LOCK IS FITTED**
	RUBBER PLUGS AND BOOTS			
C.5648	**Rubber Plug,** sealing holes in Bulkhead		6	
BD.14621	**Rubber Plug,** sealing Choke Control hole in Bulkhead		1	
BD.14771	**Rubber Plug,** sealing Speedometer Cable hole (NY.2855)		1	
C.4650	**Rubber Boot,** for Starter Motor and Solenoid Terminals (858266)		3	

Part No.	Description	Plate No.	No. per Unit	Remarks
	CLIPS			
C.1040/3	**Clip**, securing Panel Harness to Instrument Panel (187051)		2	
C.1040/4	**Clip**, securing Forward Harness to Inner Dash (187085)		2	
C.1040/5	**Clip**, securing Panel Harness to Instrument Panel (187044)		1	
C.1040/6	**Clip**, securing Petrol Pipes to Underframe (187004)		6	
C.1040/8	**Clip**, securing Reverse Switch Harness at Clutch Housing, and Number Plate Harness to Boot Lid (187047)		3	
C.1040/9	**Clip**, securing Speedometer Cable, Dipswitch Cable, and Oil Pressure and Water Temperature Gauge Cables (187052)		3	
C.1040/12	**Clip**, securing Cable to Ignition Coil Bracket (187042)		1	
C.1040/16	**Clip**, securing Forward Harness to Inner Dash (187005)		2	
C.1040/17	**Clip**, securing Battery Tray Drain Tube to Dash (187048)		2	
C.1040/26	**Clip**, securing Air Intake Drain Tubes (187060)		1	
C.1543/7	**Clip**, securing Speedometer Cable to Underframe		1	**R.H. DRIVE CARS ONLY**
C.16394	**Clip**, securing Harness at Centre Pillars		8	
C.27120	**Clip**, securing Rev. Counter Connector (54950490)		1	
C.1071/3	**Clip** (Bowden Strap) securing Lamp Cables under Front Wings (850885)		4	
C.24469	**Clip**, securing Engine Harness at Inlet Manifold		1	
	CLIP FIXINGS			
UFS.419/4H	**Screw**, Set, securing Harness Clips to Instrument Panel		3	
C.723/A	**Washer**, Shakeproof, on Setscrews		3	
UFS.419/6H	**Screw**, Set, securing Harness Clips to Inner Dash behind Instrument Panel		2	
BD.5818	**Distance Piece**, under Clips and on Setscrews		2	
UFN.119/L	**Nut**, on Setscrews		2	
C.723/A	**Washer**, Shakeproof, under Nuts		2	
UFS.419/4H	**Screw**, Set, securing Harness Clips to Inner Dash		2	
UFN.119/L	**Nut**, on Setscrews		2	
C.723/A	**Washer**, Shakeproof, under Nuts		2	
DZZ.408/6C	**Screw**, Self-Tapping, securing Battery Drain Tray Clips to Dash and Petrol Pipe Clips to Underframe		8	
C.17001	**CABLE STRAPPING (12" LONG)**		1	
C.17002	**Stud**, for Cable Strapping		2	
	INSULATORS AND SLEEVES			
C.4877/2	**Rubber Insulator** (8" long) for Harness at Instrument Panel Bracket		1	**R.H. DRIVE CARS ONLY**
C.4877/3	**Rubber Insulator** (2½" long) for Body Harness at Rear Quarters		2	
C.4877/4	**Rubber Insulator** (6" long) for Body Harnesses		5	
C.18120	**Fibre Insulator**, over Cubby Box Lamp		1	
C.16212	**Sleeve** (P.V.C.) for Wiring Tags (1¼" long)		23	
C.16394/2	**Sleeve** (P.V.C.) for Cable Clips at 'B/C' Posts (1" long)		8	
C.16864	**Sleeve** (P.V.C.) for Wiring Tags (⅛" long)		12	
C.17077	**Sleeve** P.V.C.) for Wiring Tags (1" long)		10	
C.27063	**Sleeve** (P.V.C.) for Outer Headlamp Cables (18" long)		2	
C.27064	**Sleeve** (P.V.C.) for Inner Headlamp Cables and Flasher Lamp Cables (27" long)		6	
C.17513/1	**Sleeve** (P.V.C.) on Road Lamps Switch Lever (¼" long)		1	

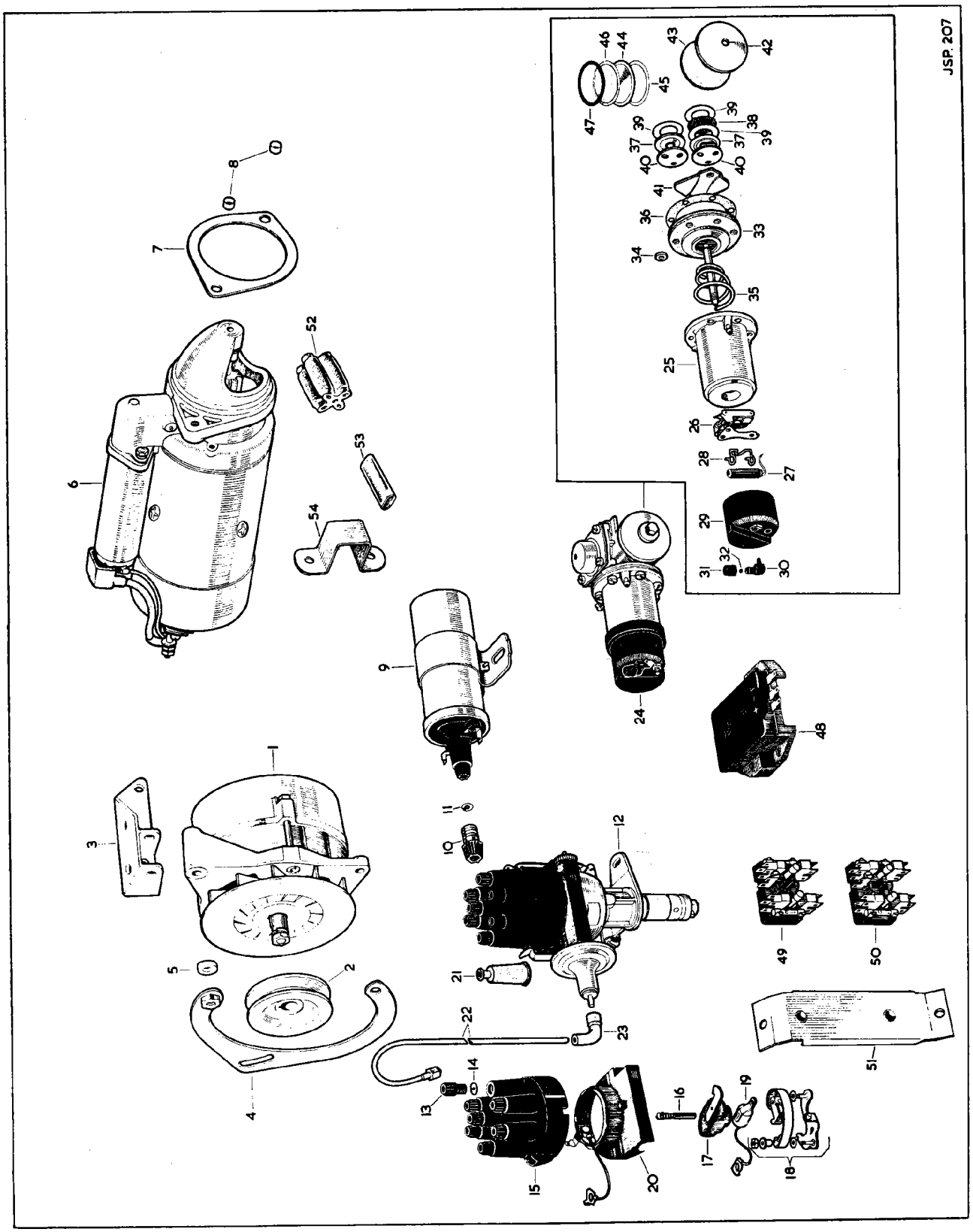

PLATE 54

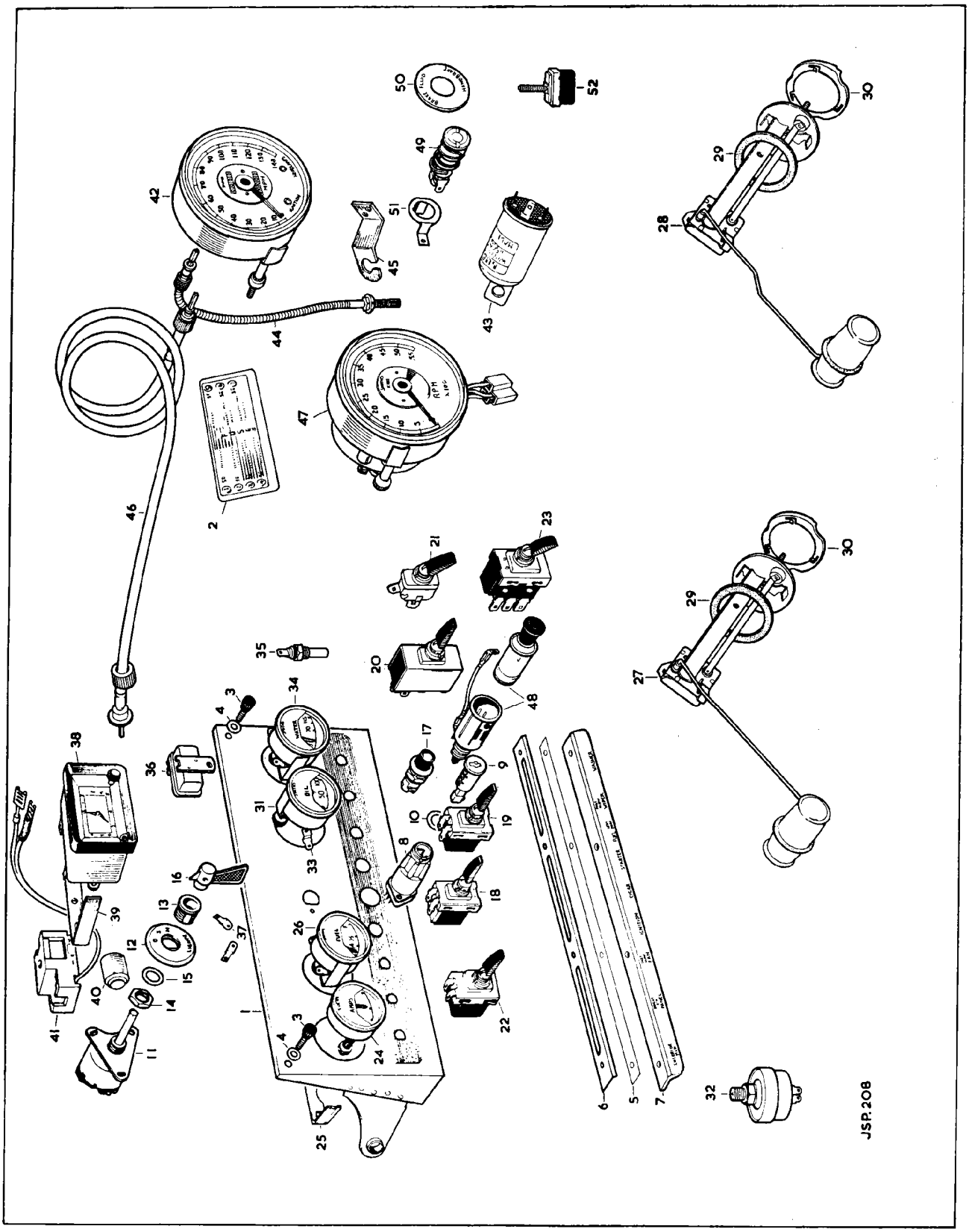

PLATE 55

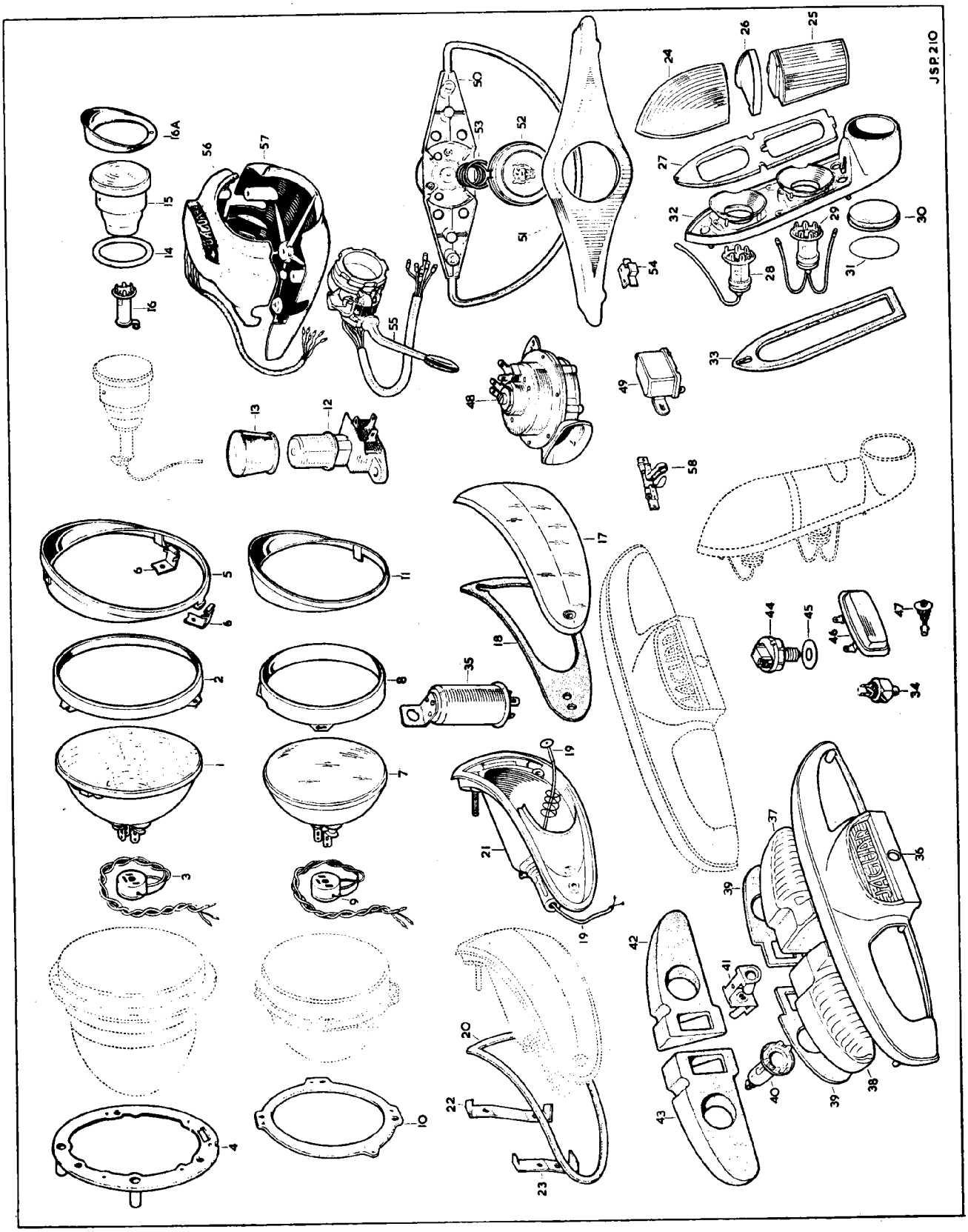

PLATE 56

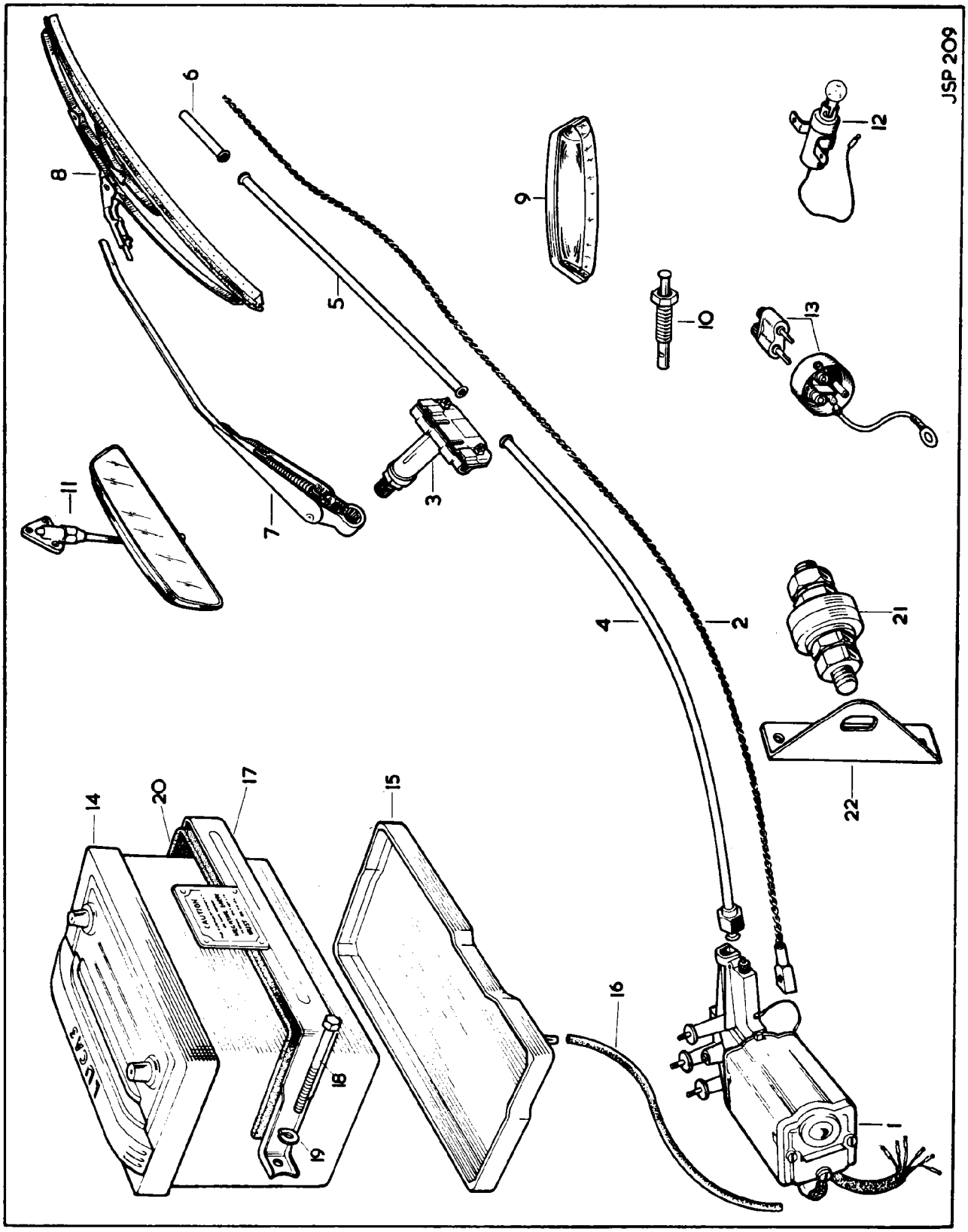

PLATE 57

Part No.	Description	Plate No.	No. per Unit	Remarks
C.23391	**MANUAL SWITCH OPERATING OVER-DRIVE UNIT (34804/D—90.SA)**		1	
C.16600	**Bracket,** mounting Manual Switch to Steering Column Outer Tube		1	
UFS.119/4R	**Screw,** Set, securing Brackets		2	
UFN.119/L	**Nut,** on Setscrews		2	
C.723/A	**Washer,** Shakeproof, under Nuts		2	
BD.22655	**Clip,** retaining Line Fuse to Facia Board		1	
DAZ.404/4C	**Screw,** Self-Tapping, securing Clip		1	
C.25925	**UPPER SWITCH COVER AT CENTRE OF STEERING WHEEL (54361834)**		1	
C.15792	**Indicator Light Unit** (54360413)		1	
C.25924	**Unit Indicator** ("OVERDRIVE") (54361967)		1	
C.15787	**Bulb** (12v. 2w.) (281)		3	
8411	**Bulb Holder,** complete with Cables (54945043)		1	
8092	**Rubber Pad** (54360531)		1	
C.20793	**LOWER SWITCH COVER AT CENTRE OF STEERING WHEEL**		1	
BD.13713/2	**Screw,** Set, securing Lower Switch Cover to Steering Column		3	
C.16460	**Screw,** Set, clamping Upper and Lower Switch Covers together		2	
C.15830	**Washer,** Special, on Setscrews		5	
C.27121	**RESISTANCE, ON ROAD LAMPS SWITCH, DIMMING "OVERDRIVE" INDICATOR LIGHTING DURING NIGHT DRIVING (54334484)**		1	
C.26796	**SPEEDOMETER (SN.6326/55) (CALIBRATED IN MILES)**		1	**FOR USE WITH 3.77 : 1 FINAL DRIVE RATIO AND 185 × 15 SP.41 TYRES**
C.26797	**SPEEDOMETER (SN.6326/56) (CALIBRATED IN KILOS)**		1	**FOR USE WITH 3.77 : 1 FINAL DRIVE RATIO AND 185 × 15 SP.41 TYRES**

SECTION 49

ELECTRICAL EQUIPMENT

OVERDRIVE TRANSMISSION

Part No.	Description	Plate No.	No. per Unit	Remarks
C.26798	**SPEEDOMETER (SN.6326/51) (CALIBRATED IN MILES)**		1	FOR USE WITH 3.77 : 1 FINAL DRIVE RATIO AND 6.40 × 15 RS.5 TYRES
C.26799	**SPEEDOMETER (SN.6326/52) (CALIBRATED IN KILOS)**		1	
987	**Bulb**, illuminating Speedometer, and for Ignition and Headlamp Main Beam Warning Lamps (987)		4	
C.16898	**Bulb Holder** (54360731)		2	
	NOTE : To ensure that the correct Speedometer is supplied by Jaguar Spares Division IT IS IMPORTANT, WHEN ORDERING, to quote the number printed on the dial of the displaced instrument.			
	On some specially calibrated instruments the number is printed on the back of the Speedometer Casing.			
C.25403	**FLEXIBLE SPEEDOMETER CABLE COMPLETE (DF.1110/00/Z.68)**		1	R.H. DRIVE CARS ONLY
11035	**Inner Cable only** (DI.1110/00/Z.68)		1	
11036	**Outer Cable only** (DO.1110/00/68)		1	
C.25696	**FLEXIBLE SPEEDOMETER CABLE COMPLETE (DF.1110/00/Z.76)**		1	L.H. DRIVE CARS ONLY
11037	**Inner Cable only** (DI.1110/00/Z.76)		1	
11038	**Outer Cable only** (DO.1110/00/76)		1	
C.24589	**RIGHT-ANGLE DRIVE, FOR SPEEDOMETER CABLE (AT GEARBOX) (BG.2002/07)**		1	
C.1083	**SWITCH, IN GEARBOX TOP COVER, OPERATING REVERSE LAMP (31542—SS.10/1)**		1	See also Gearbox
C.4531	**Gasket**, for Reverse Lamp Switch (163682)		1	
C.1083	**SWITCH, IN GEARBOX TOP COVER, OPERATING TOP GEAR CIRCUIT (31542—SS.10/1)**		1	
C.4531	**Gasket**, for adjustment of Top Gear Switch (163682)		As req'd	
C.26377	**Gasket**, for adjustment of Top Gear Switch (.020" thick)		As req'd	
10002	**SOLENOID ON OVERDRIVE UNIT (76522/H—11.S)**		1	See also Overdrive Unit
C.27102	**GEARBOX HARNESS**		1	

Part No.	Description	Plate No.	No. per Unit	Remarks
C.26968	**OVERDRIVE HARNESS**		1	**R.H. DRIVE CARS ONLY**
C.26969	**OVERDRIVE HARNESS**		1	**L.H. DRIVE CARS ONLY**
	GROMMETS AND PLUGS			
C.17432	**Grommet,** in Gearbox Tunnel, for Harness (863123)		1	
C.5648	**Rubber Plug,** sealing hole in Bulkhead		1	
	CLIPS			
C.1543/7	**Clip,** securing Speedometer Cable to Underframe		1	**R.H. DRIVE CARS ONLY**
	CABLE STRAPPING			
C.25969	**Cable Tie,** fixing Speedometer Cable to Heater Pipe		1	**L.H. DRIVE CARS ONLY**

Part No.	Description	Plate No.	No. per Unit	Remarks
C.25327	**DISTRIBUTOR (41065/A—22.D6)**		1	
C.11906	**Nut,** for connection of High Tension Leads (410600)		7	
C.5452	**Washer** (Copper) at end of High Tension Leads (185015)		7	
6476	**Clamping Plate** (423605)		1	
6477	**Screw,** for Clamping Plate (415087)		1	
9930	**Cap** (54414989)		1	
6479	**Brush and Spring,** inside Cap (418856)		1	
C.25328	**Rotor** (54417627)		1	
9931	**Contact Set** (423153)		1	
6487	**Insulating Bush,** for Contact Breaker Lever (415590)		1	
C.11991	**Condenser** (423871)		1	
C.25287	**Waterproof Cover,** complete with Terminal, Bush, and Lead (54417459)		1	
9933	**Insulating Washer,** for Terminal (161353)		1	
9934	**Earth Lead** (421088)		1	
9968	**Spring,** Auto-Advance (54415562)		1 set	
10520	**Weight,** Auto-Advance (54413073)		2	
6497	**Return Spring,** for Vacuum Unit (419086)		1	
9969	**Vacuum Unit** (54415894)		1	
9938	**Oil Seal** ("O" Ring) on Distributor Spigot (188639)		1	
9253	**Driving Dog** (420620)		1	
C.2607	**Sleeve** (Rubber) on Distributor Leads (414965)		7	
C.25117	**UPPER SWITCH COVER AT CENTRE OF STEERING WHEEL (54361833)**		1	
C.15792	**Indicator Light Unit** (54360413)		1	
C.22540	**Gear Indicator** (P.R.N.D2.D1.L) (54361538)		1	
C.15787	**Bulb** (12v. 2w.) (281)		3	
8411	**Bulb Holder,** complete with Cables (54945043)		1	
8092	**Rubber Pad** (54360531)		1	
C.20792	**LOWER SWITCH COVER AT CENTRE OF STEERING WHEEL**		1	
BD.13713/2	**Screw,** Set, securing Lower Switch Cover to Steering Column		3	
C.16460	**Screw,** Set, clamping Upper and Lower Switch Covers together		2	
C.15830	**Washer,** Special, on Setscrews		5	
C.23291	**SWITCH, ON STEERING COLUMN, OPERATING REVERSE LAMP AND STARTER CUT-OUT (34822/B—126.SA)**		1	**See also Automatic Transmission Control**
C.24467	**RELAY, FOR SWITCH OPERATING REVERSE LAMP AND STARTER CUT-OUT (33188/D—6.RA)**		1	
DAZ.410/8C	**Screw,** Self-Tapping, securing Relay to Inner Dash		2	
C.27121	**RESISTANCE, ON ROAD LAMPS SWITCH, DIMMING TRANSMISSION INDICATOR LIGHT DURING NIGHT DRIVING (54334484)**		1	

SECTION 50

ELECTRICAL EQUIPMENT

AUTOMATIC TRANSMISSION

Part No.	Description	Plate No.	No. per Unit	Remarks
C.26792	**SPEEDOMETER (SN.6326/57) (CALIBRATED IN MILES)**		1	**FOR USE WITH 3.31 : 1 FINAL DRIVE RATIO AND 185 × 15 SP.41 TYRES**
C.26793	**SPEEDOMETER (SN.6326/58) (CALIBRATED IN KILOS)**		1	
C.26794	**SPEEDOMETER (SN.6326/53) (CALIBRATED IN MILES)**		1	**FOR USE WITH 3.31 : 1 FINAL DRIVE RATIO AND 6.40 × 15 RS.5 TYRES**
C.26795	**SPEEDOMETER (SN.6326/54) (CALIBRATED IN KILOS)**		1	
987	**Bulb,** illuminating Speedometer, and for Ignition and Headlamp Main Beam Warning Lamps (987)		4	
C.16898	**Bulb Holder** (54360731)		2	
	NOTE : To ensure that the correct Speedometer is supplied by Jaguar Spares Division IT IS IMPORTANT, WHEN ORDERING, to quote the number printed on the dial of the displaced instrument.			
	On some specially calibrated instruments the number is printed on the back of the Speedometer Casing.			
C.24870	**FLEXIBLE SPEEDOMETER CABLE, COMPLETE (DF.1110/00/Z.66)**		1	**R.H. DRIVE CARS ONLY**
8241	**Inner Cable only** (DI.1110/00/Z.66)		1	
8242	**Outer Cable only** (DO.1112/00/66)		1	
C.25696	**FLEXIBLE SPEEDOMETER CABLE, COMPLETE (DF.1110/00/Z.76)**		1	**L.H. DRIVE CARS ONLY**
11037	**Inner Cable only** (DI.1110/00/Z.76)		1	
11038	**Outer Cable only** (DO.1110/00/76)		1	
C.24589	**RIGHT-ANGLE DRIVE, FOR SPEEDOMETER CABLE (AT TRANSMISSION UNIT (BG.2002/07)**		1	
C.26970	**HARNESS, FOR SWITCH AND RELAY OPERATING REVERSE LAMP AND STARTER CUT-OUT**		1	**R.H. DRIVE CARS ONLY**

Part No.	Description	Plate No.	No. per Unit	Remarks
C.26971	**HARNESS, FOR SWITCH AND RELAY OPERATING REVERSE LAMP AND STARTER CUT-OUT**		1	**L.H. DRIVE CARS ONLY**
	GROMMETS			
C.5574	**Grommet,** in Bulkhead, for Gear Control Cable		1	**R.H. DRIVE CARS ONLY**
	CLIPS			
C.1543/7	**Clip,** securing Speedometer Cable to Underframe		1	**R.H. DRIVE CARS ONLY**

SECTION 52

WINDSCREEN WASHER

Part No.	Description	Plate No.	No. per Unit	Remarks
C.25438	**WINDSCREEN WASHER UNIT ASSEMBLY (54071313—5.SJ)**		1	
11080	**Motor**, complete with Coupling (54700489)	60—1	1	
11081	**Screw**, securing Motor to Cover (54102956)	60—2	1	
11082	**Coupling**, between Motor and Pump (54718214)	60—3	1	
11083	**Cover and Pump Assembly**, complete with Coupling (54717203)	60—4	1	
11084	**Reservoir** (54713810)	60—5	1	
11085	**Filler Cap**, on Reservoir (54713627)	60—6	1	
11086	**Bracket and Strap Assembly**, holding Washer Unit (54713814)	60—7	1	
UFS.419/8H	**Screw**, Set, securing Windscreen Washer Bracket to Dash		3	
C.723/A	**Washer**, Shakeproof, on Setscrews		3	
BD.18957/1	**Distance Piece**, on Setscrews		3	
UFS.419/2H	**Screw**, Set, sealing Redundant Mounting Holes		3	
C.723/A	**Washer**, Shakeproof, on Setscrews		3	
11080	**MOTOR, COMPLETE WITH COUPLING (54700489)**	60—1	1	
8043	**Brush Set** (54711077)		1	
11088	**Armature** (54700377)		1	
C.19402	**SCREEN WASHER TUBE (116" LONG) (54713823)**	60—8	1	
C.15644	**"T" PIECE AT JUNCTION OF FLUID TUBES (295091)**	60—9	1	
C.15645	**JET ASSEMBLY (54711657)**	60—10	2	

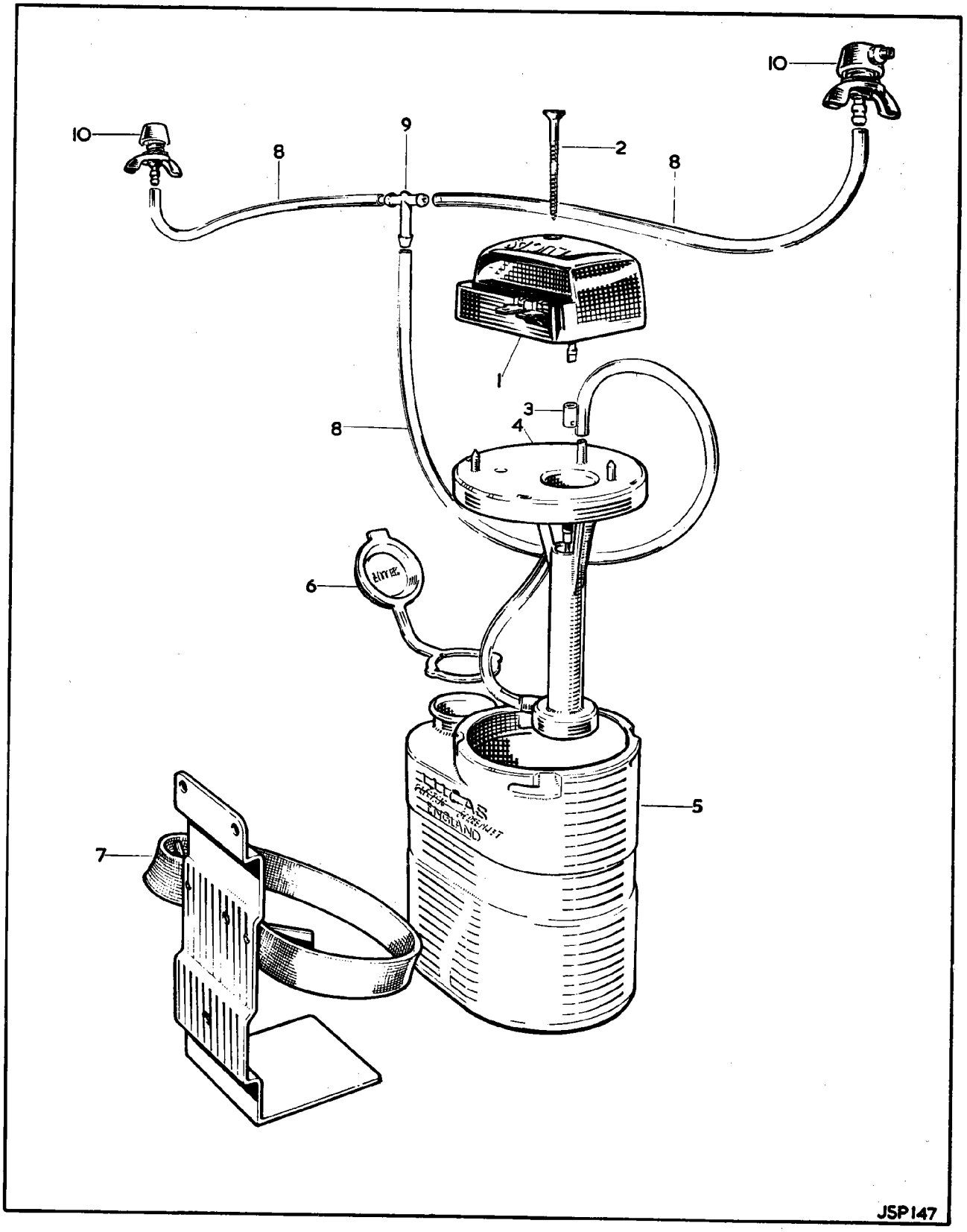

PLATE 60

SECTION 43

BODY SHELL

Part No.	Description	Plate No.	No. per Unit	Remarks
BD.29605	**BODY SHELL ASSEMBLY (32310/0950)**		1	**FOR CARS FITTED WITH STANDARD OR OVERDRIVE TRANSMISSION**
11402	**Underframe Assembly** (32310/0024)		1	
10238	**Body Side Assembly,** R.H. (31680/0010)		1	
10239	**Body Side Assembly,** L.H. (31680/0011)		1	
10240	**Roof Panel** (11680/0003)		1	
11359	**Front Wing Assembly,** R.H. (42310/0048)		1	
11360	**Front Wing Assembly,** L.H. (42310/0049)		1	
11424	**Baffle,** for R.H. Front Wing (12310/0124)		1	
11425	**Baffle,** for L.H. Front Wing (12310/0125)		1	
11361	**Panel,** joining Front Wings at top of Radiator Grille Aperture (12310/0102)		1	
11362	**Panel,** joining Front Wings at bottom of Radiator Grille Aperture (12310/0103)		1	
11363	**Reinforcement Panel,** at bottom of Radiator Grille Aperture (12310/0122)		1	
6602	**Stay Bracket,** for R.H. Front Wing (171/238)		1	
6603	**Stay Bracket,** for L.H. Front Wing (171/239)		1	
11403	**Gusset,** reinforcing R.H. Stay Bracket (12310/0136)		1	
11383	**Gusset,** reinforcing L.H. Stay Bracket (12310/0137)		1	
11364	**Bonnet Assembly** (32310/0014)		1	
5144	**Bonnet Hinge Assembly,** R.H. (271/116)		1	
5145	**Bonnet Hinge Assembly,** L.H. (271/117)		1	
11404	**Peg Assembly,** for Bonnet Catch (21680/0126)		1	
6730	**Safety Hook Assembly,** for Bonnet Catch (271/153)		1	
780	**Spring,** for Safety Hook (253/820)		1	
782	**Pin,** through Safety Hook (253/821)		1	
5117	**Lid Assembly,** for Scuttle Ventilator (371/100)		1	
7988	**Distance Piece,** for Scuttle Ventilator Lid (271/230)		2	
7358	**Cover Plate,** Dash side (171/235)		2	
8152	**Windscreen Rail,** lower R.H. (371/1134)		1	
8153	**Windscreen Rail,** lower L.H. (371/1135)		1	
10241	**Reinforcement Assembly,** for Facia (31680/0138)		1	
8437	**Closing Panel,** at R.H. side of Windscreen (171/1166)		1	
8438	**Closing Panel,** at L.H. side of Windscreen (171/1167)		1	
8147	**Windscreen Header Panel Assembly** (371/1116)		1	
10242	**Reinforcement,** closing R.H. Cantrail at centre (11680/0118)		1	
10243	**Reinforcement,** closing L.H. Cantrail at centre (11680/0119)		1	
10135	**Door Shell Assembly,** R.H. Front (41680/0040)		1	
10136	**Door Shell Assembly,** L.H. Front (41680/0041)		1	
8167	**Check Arm Assembly,** for Front Doors (271/1100)		2	
7024	**Pin,** securing Front Door Check Arms (271/210)		2	
10137	**Door Shell Assembly,** R.H. Rear (41680/0046)		1	
10138	**Door Shell Assembly,** L.H. Rear (41680/0047)		1	
5141	**Check Arm Assembly,** for Rear Doors (271/100)		2	
7024	**Pin,** securing Rear Door Check Arms (271/210)		2	
10244	**Reinforcement,** closing R.H. 'D' Post (11680/0116)		1	
10245	**Reinforcement,** closing L.H. 'D' Post (11680/0117)		1	
10246	**Spacer,** for R.H. 'D' Post, lower (11680/0180)		1	
10247	**Spacer,** for L.H. 'D' Post, lower (11680/0181)		1	
10248	**Reinforcement Assembly,** at top and sides of Backlight (31680/0110)		1	
10249	**Reinforcement,** lower, for Backlight (11680/0114)		1	
10250	**Tonneau Panel,** behind Backlight (11680/0175)		1	
10141	**Rear Wing Assembly,** R.H. (31680/0050)		1	
10142	**Rear Wing Assembly,** L.H. (31680/0051)		1	
9549	**Bracket Assembly,** mounting Rear Bumper at sides (31330/0228)		2	
10133	**Petrol Filler Door Assembly,** R.H. (31680/0128)		1	
10134	**Petrol Filler Door Assembly,** L.H. (31680/0129)		1	
10148	**Hinge Bracket and Arm Assembly,** for Petrol Filler Doors (31680/0126)		2	
10149	**Spring,** for Petrol Filler Doors (21680/0107)		2	
10132	**Boot Lid Assembly** (31680/0085)		1	
10150	**Hinge Assembly,** R.H., for Boot Lid (21680/0100)		1	
10151	**Hinge Assembly,** L.H., for Boot Lid (21680/0101)		1	
9443	**Attachment Bracket,** for Boot Lid Hinges (11330/0105)		2	

Part No.	Description	Plate No.	No. per Unit	Remarks
	BODY SHELL ASSEMBLY (cont'd)			
10147	**Spare Wheel Cover Assembly** (31680/0076)		1	
BD.28269	**Prop,** for Spare Wheel Cover (21680/0104)		1	
10251	**Body Panel Assembly,** lower rear outer (31680/0002)		1	
BD.25977	**Tail Panel Assembly** (complete with Exhaust Pipe Cut-Outs) (21680/0114)		1	
BD.29606	**BODY SHELL ASSEMBLY (32311/0950)**		1	**FOR CARS FITTED WITH AUTOMATIC TRANSMISSION**
11405	**Underframe Assembly** (32311/0024)		1	
	All other items are as for Body Shell BD.29605			
	SUPPLEMENTARY ITEMS NECESSARY TO COMPLETE BODY SHELL ASSEMBLY			
BD.27952	**GAUZE FOR SCUTTLE VENTILATOR LID**		1	
UFS.819/4H	**Screw,** Set, securing Gauze		3	
C.723/A	**Washer,** Shakeproof, on Setscrews		3	
AW.102/T	**Washer,** Plain, under Shakeproof Washers		3	
C.8971	**COVER PLATE, SEALING REDUNDANT PEDAL HOLE IN DASH (171/265)**		1	
C.8957	**Gasket,** under Cover Plate		1	
UFS.125/5R	**Screw,** Set, securing Cover Plate		4	
UFN.125/L	**Nut,** on Setscrews		4	
C.724	**Washer,** Shakeproof, under Nuts		4	
FW.104/T	**Washer,** Plain, under Shakeproof Washers		4	
BD.10407	**COVER PLATE, SEALING REDUNDANT STEERING COLUMN APERTURE IN DASH (171/231)**		1	
BD.1814/2	**Pop Rivet,** securing Cover Plate		4	
BD.29943	**SEAL ASSEMBLY FOR DIAPHRAGM AT REAR OF R.H. FRONT WING**		1	
BD.10229	**Rubber Seal**		1	
BD.29945	**Retainer,** for Seal		1	
BD.17653	**Bifurcated Rivet,** securing Seal to Retainer		4	
BD.29944	**SEAL ASSEMBLY FOR DIAPHRAGM AT REAR OF L.H. FRONT WING**		1	
BD.10229	**Rubber Seal**		1	
BD.29946	**Retainer,** for Seal		1	
BD.17653	**Bifurcated Rivet,** securing Seal to Retainer		4	
BD.1814/2	**Pop Rivet,** securing Seals to Body		12	

SECTION 43

BODY SHELL

Part No.	Description	Plate No.	No. per Unit	Remarks
C.22337	**HEAT SHIELD, FOR MAIN EXHAUST SILENCERS**		2	
BD.1814/9	**Pop Rivet,** securing Heat Shields		8	
BD.17990	**FILLER PIECE, ON HINGE FACE OF R.H. REAR DOOR, SEATING DOOR SEAL**		1	
BD.17989	**FILLER PIECE, ON HINGE FACE OF L.H. REAR DOOR, SEATING DOOR SEAL**		1	
BD.1814/1	**Pop Rivet,** securing Filler Pieces		4	
BD.19783	**COVER PLATE FOR LOCK MECHANISM BRACKETS ON BOOT LID (11330/0334)**		2	
BD.25828	**COVER PLATE ASSEMBLY, AT CENTRE OF PARCEL SHELF**		1	
BD.25829	**COVER PLATE ASSEMBLY, AT ENDS OF PARCEL SHELF**		2	

BODY UNDERFRAME

Part No.	Description	Plate No.	No. per Unit	Remarks
11402	**UNDERFRAME ASSEMBLY (32310/0024)**		1	**FOR CARS FITTED WITH STANDARD OR OVERDRIVE TRANSMISSION**
11406	**Side Member Assembly,** R.H. (32310/0022)		1	
11385	**Side Member Assembly,** L.H. (32310/0023)		1	
11407	**Closing Plate Assembly,** for R.H. Side Member (32310/0106)		1	
11386	**Closing Plate Assembly,** for L.H. Side Member (32310/0107)		1	
11408	**Filler Plate Assembly,** joining R.H. Side Member to Wing Valance at Front (32310/0104)		1	
11409	**Filler Plate Assembly,** joining L.H. Side Member to Wing Valance at Front (32310/0105)		1	
11387	**Front Cross Member Assembly** (32310/0100)		1	
11388	**Closing Panel Assembly,** for Front Cross Member (32310/0109)		1	
4128	**Brace,** at R.H. side of Front Cross Member (171/752)		1	
4129	**Brace,** at L.H. Side of Front Cross Member (171/753)		1	
11410	**Valance Assembly,** under R.H. Front Wing (32310/0088)		1	
11384	**Valance Assembly,** under L.H. Front Wing (32310/0089)		1	
11411	**Reinforcement Assembly,** for Bonnet Lock (32310/0101)		1	
11412	**Dash Centre Assembly** (32310/0027)		1	
11413	**Front Floor Assembly** (32310/0108)		1	
10157	**Intermediate Panel Assembly,** for R.H. Door Sill (31680/0724)		1	
10158	**Intermediate Panel Assembly,** for L.H. Door Sill (31680/0725)		1	
10264	**Support Panel Assembly,** for Rear Seat Squab (31680/0704)		1	
10273	**Cross Member,** at bottom of Support Panel (11680/0702)		1	
11414	**Reinforcement,** R.H., for Rear Seat Pan (11680/0250)		1	
11415	**Reinforcement,** L.H., for Rear Seat Pan (11680/0251)		1	
10154	**Parcel Shelf Panel Assembly** (31680/0113)		1	
10272	**Boot Floor and Spare Wheel Well Assembly** (31680/0703)		1	
9548	**Bracket Assembly,** mounting Rear Bumper at Rear (31330/0118)		2	
10276	**Reinforcement Assembly,** at R.H. side of Boot Lid Aperture (31680/0136)		1	
10277	**Reinforcement Assembly,** at L.H. side of Boot Lid Aperture (31680/0137)		1	
10155	**Petrol Filler Box Assembly,** R.H. (31680/0132)		1	
10156	**Petrol Filler Box Assembly,** L.H. (31680/0133)		1	
10278	**Rear Wheel Arch Assembly,** R.H. (31680/0094)		1	
10279	**Rear Wheel Arch Assembly,** L.H. (31680/0095)		1	
10280	**Recess Panel Assembly,** housing R.H. Petrol Tank (31680/0150)		1	
10281	**Recess Panel Assembly,** housing L.H. Petrol Tank (31680/0151)		1	
10282	**Side Panel,** for R.H. Petrol Tank Recess (11680/0726)		1	
10283	**Side Panel,** for L.H. Petrol Tank Recess (11680/0727)		1	
10284	**Bracket,** R.H. rear, fixing Petrol Tank Cradle (11680/0752)		1	
10285	**Bracket,** L.H. rear, fixing Petrol Tank Cradle (11680/0753)		1	
10286	**Bracket,** R.H. front, fixing Petrol Tank Cradle (11680/0754)		1	
10287	**Bracket,** L.H. front, fixing Petrol Tank Cradle (11680/0755)		1	
11405	**UNDERFRAME ASSEMBLY (32311/0024)**		1	**FOR CARS FITTED WITH AUTOMATIC TRANSMISSION**
11416	**Dash Centre Assembly** (32311/0027)		1	
11417	**Front Floor Assembly** (32311/0102)		1	

All other items are as for Underframe 11402

SECTION 44

BODY UNDERFRAME

Part No.	Description	Plate No.	No. per Unit	Remarks
11406	**SIDE MEMBER ASSEMBLY, R.H. (32310/0022)**	45—1	1	
6629	**Support Plate,** for Engine Mounting (171/843)		1	
6648	**Bracket Assembly,** mounting Front Suspension (371/754)		1	
6738	**Front Jacking Tube Assembly,** R.H. (371/714)	45—2	1	
11385	**SIDE MEMBER ASSEMBLY, L.H. (32310/0023)**		1	
6739	**Front Jacking Tube Assembly,** L.H. (371/715)		1	
	All other items are as for Side Member 11406			
11407	**Closing Plate Assembly,** for R.H. Side Member (32310/0106)	45—3	1	
11386	**Closing Plate Assembly,** for L.H. Side Member (32310/0107)		1	
11408	**Filler Plate Assembly,** joining R.H. Side Member to Wing Valance at front (32310/0104)	45—4	1	
11409	**Filler Plate Assembly,** joining L.H. Side Member to Wing Valance at front (32310/0105)		1	
11387	**FRONT CROSS MEMBER ASSEMBLY (32310/0100)**	45—5	1	
4128	**Brace,** at R.H. side of Front Cross Member (171/752)	45—6	1	
4129	**Brace,** at L.H. side of Front Cross Member (171/753)		1	
11388	**CLOSING PANEL ASSEMBLY FOR FRONT CROSS MEMBER (32310/0109)**	45—7	1	
11418	**Bracket Assembly,** R.H., mounting Radiator at bottom (32310/0114)		1	
11419	**Bracket Assembly,** L.H., mounting Radiator at bottom (32310/0115)		1	
11410	**VALANCE ASSEMBLY, UNDER R.H. FRONT WING (32310/0088)**	45—8	1	
11420	**Extension Panel,** from R.H. Wing Valance to Grille Aperture (12310/0106)	45—9	1	
6719	**Angle,** R.H., for attachment of Facia Reinforcement (171/294)		1	
6717	**Diagonal Stiffener,** to R.H. 'A' Post (171/226)	45—10	1	
7312	**Clinch Nut,** $\frac{5}{16}$" U.N.F. (UNF.201/X)		3	
7313	**Weld Nut,** No. 10 U.N.F. (UWN.103/HG)		2	
7314	**Weld Nut,** $\frac{1}{4}$" U.N.F. (UWN.163/HG)		2	
8180	**Weld Nut,** $\frac{5}{16}$" U.N.F. (UWN.203/HG)		3	
11384	**VALANCE ASSEMBLY, UNDER L.H. FRONT WING (32310/0089)**	45—11	1	
11421	**Extension Panel,** from L.H. Wing Valance to Grille Aperture (12310/0107)	45—12	1	
6720	**Angle,** L.H., for attachment of Facia Reinforcement (171/295)		1	
6718	**Diagonal Stiffener,** to L.H. 'A' Post (171/227)		1	
7312	**Clinch Nut,** $\frac{5}{16}$" U.N.F. (UNF.201/X)		3	

Part No.	Description	Plate No.	No. per Unit	Remarks
	VALANCE ASSEMBLY, UNDER L.H. FRONT WING (cont'd)			
7313	**Weld Nut,** No. 10 U.N.F. (UWN.103/HG)		2	
7314	**Weld Nut,** $\frac{1}{4}$" U.N.F. (UWN.163/HG)		5	
8180	**Weld Nut,** $\frac{5}{16}$" U.N.F. (UWN.203/HG)		1	
11411	**REINFORCEMENT ASSEMBLY, FOR BONNET LOCK (32310/0101)**	45—13	1	
11412	**DASH CENTRE ASSEMBLY (32310/0027)**	45—14	1	**FOR CARS FITTED WITH STANDARD OR OVERDRIVE TRANSMISSION**
6895	**Reinforcement,** Dash Front, R.H. (171/178)		1	
6896	**Reinforcement,** Dash Front, L.H. (171/179)		1	
11416	**DASH CENTRE ASSEMBLY (32311/0027)**		1	**FOR CARS FITTED WITH AUTOMATIC TRANSMISSION**
	Individual items are as for Dash Centre 11412			
C.8971	**COVER PLATE, SEALING REDUNDANT PEDAL HOLE IN DASH (171/265)**		1	
C.8957	**Gasket,** under Cover Plate		1	
UFS.125/SR	**Screw,** Set, securing Cover Plate		4	
UFN.125/L	**Nut,** on Setscrews		4	
C.724	**Washer,** Shakeproof, under Nuts		4	
FW.104/T	**Washer,** Plain, under Shakeproof Washers		4	
BD.10407	**COVER PLATE, SEALING REDUNDANT STEERING COLUMN APERTURE IN DASH (171/231)**		1	
BD.1814/2	**Pop Rivet,** securing Cover Plate		4	
11413	**FRONT FLOOR ASSEMBLY (32310/0108)**	45—15	1	**FOR CARS FITTED WITH STANDARD OR OVERDRIVE TRANSMISSION**
10292	**Intermediate Cross Member Assembly** (31680/0728)		1	
7003	**Inner Panel,** for R.H. Sill (171/704)		1	
7002	**Inner Panel,** for L.H. Sill (171/705)		1	
7004	**Diaphragm,** for Inner Sill Panels (171/766)		2	
10295	**Rear Seat Pan Assembly** (31680/0066)		1	
7901	**Reinforcement,** Floor to Seat Pan (171/862)		1	
10293	**Bracket,** fixing R.H. Main Exhaust Silencer at rear (11680/0226)		1	
10294	**Bracket,** fixing L.H. Main Exhaust Silencer at rear (11680/0227)		1	
11417	**FRONT FLOOR ASSEMBLY (32311/0102)**		1	**FOR CARS FITTED WITH AUTOMATIC TRANSMISSION**
	Individual items are as for Front Floor 11413			
C.22337	**HEAT SHIELD, FOR MAIN EXHAUST SILENCERS**		2	
BD.1814/9	**Pop Rivet,** securing Heat Shields		8	

SECTION 44

BODY UNDERFRAME

Part No.	Description	Plate No.	No. per Unit	Remarks
10292	**INTERMEDIATE CROSS MEMBER ASSEMBLY (31680/0728)**		1	
10296	**Bracket Assembly,** R.H., mounting Handbrake Shaft (31680/0720)		1	
10297	**Bracket Assembly,** L.H., mounting Handbrake Shaft (31680/0721)		1	
10157	**INTERMEDIATE PANEL ASSEMBLY, FOR R.H. DOOR SILL (31680/0724)**	45—16	1	
10158	**INTERMEDIATE PANEL ASSEMBLY, FOR L.H. DOOR SILL (31680/0725)**		1	
10264	**SUPPORT PANEL ASSEMBLY, FOR REAR SEAT SQUAB (31680/0704)**	45—17	1	
11414	**Reinforcement,** R.H., for Rear Seat Pan (11680/0250)		1	
11415	**Reinforcement,** L.H., for Rear Seat Pan (11680/0251)		1	
10273	**CROSS MEMBER AT BOTTOM OF SUPPORT PANEL (11680/0702)**	45—18	1	
10154	**PARCEL SHELF PANEL ASSEMBLY (31680/0113)**	45—19	1	
10298	**Fixing Plate Assembly,** for R.H. Boot Lid Hinge (31680/0102)		1	
10299	**Fixing Plate Assembly,** for L.H. Boot Lid Hinge (31680/0103)		1	
BD.25828	**COVER PLATE ASSEMBLY, AT CENTRE OF PARCEL SHELF**		1	
BD.25829	**COVER PLATE ASSEMBLY, AT ENDS OF PARCEL SHELF**		2	
10272	**BOOT FLOOR AND SPARE WHEEL WELL ASSEMBLY (31680/0703)**		1	
10300	**Cross Member,** for Boot Floor (11680/0709)	45—20	1	
10301	**Outer Panel,** R.H., for Boot Floor (11680/0718)	45—21	1	
10302	**Outer Panel,** L.H., for Boot Floor (11680/0719)	45—22	1	
10303	**Rear Panel,** R.H. Outer, for Boot Floor (11680/0742)	45—23	1	
10304	**Rear Panel,** L.H. Outer, for Boot Floor (11680/0743)	45—24	1	
10305	**Body Panel Assembly,** Lower Rear Inner (31680/0707)	45—25	1	
10306	**Support Bracket Assembly,** for Jack Clamp (31680/0144)		1	
10307	**Retaining Bracket,** for Jack (11680/0210)		1	
10308	**Spare Wheel Well** (11680/0074)	45—26	1	

Part No.	Description	Plate No.	No. per Unit	Remarks
	BOOT FLOOR AND SPARE WHEEL WELL ASSEMBLY (cont'd)			
6984	**Tapped Boss,** receiving Spare Wheel Clamp Screw (271/711)		1	
10309	**Forward Luggage Floor** (11680/0703)	45—27	1	
10310	**Rear Frame Bracket Assembly,** R.H. (31680/0708)		1	
10311	**Rear Frame Bracket Assembly,** L.H. (31680/0709)		1	
10274	**Closing Plate,** at top of R.H. Rear Frame Bracket (11680/0722)		1	
10275	**Closing Plate,** at top of L.H. Rear Frame Bracket (11680/0723)		1	
9548	**Bracket Assembly,** mounting Rear Bumper at rear (31330/0118)	45—28	2	
BD.26610	**REINFORCEMENT AT SIDES OF FORWARD LUGGAGE FLOOR**		2	
10305	**BODY PANEL ASSEMBLY, LOWER REAR INNER (31680/0707)**	45—25	1	
10470	**Spring,** receiving Dzus Stud (DZS.201/A)		1	
10471	**Rivet,** securing Spring (RS.083/R.03)		2	
10310	**REAR FRAME BRACKET ASSEMBLY, R.H. (31680/0708)**	45—29	1	
10312	**Rear Jacking Tube Assembly,** R.H. (31680/0712)	45—30	1	
10314	**Bracket,** lower, mounting Rear Suspension Bump Stop (11680/0706)	45—31	1	
10274	**Closing Plate,** at top of R.H. Rear Frame Bracket (11680/0722)	45—32	1	
10311	**REAR FRAME BRACKET ASSEMBLY, L.H. (31680/0709)**		1	
10313	**Rear Jacking Tube Assembly,** L.H. (31680/0713)		1	
10314	**Bracket,** lower, mounting Rear Suspension Bump Stop (11680/0706)		1	
10275	**Closing Plate,** at top of L.H. Rear Frame Bracket (11680/0723)		1	
BD.26611	**REINFORCEMENT ASSEMBLY UNDER REAR FRAME BRACKETS**		2	
10276	**REINFORCEMENT ASSEMBLY AT R.H. SIDE OF BOOT LID APERTURE (31680/0136)**	45—33	1	

SECTION 44

BODY UNDERFRAME

Part No.	Description	Plate No.	No. per Unit	Remarks
10277	**REINFORCEMENT ASSEMBLY AT L.H. SIDE OF BOOT LID APERTURE (31680/0137)**		1	
10155	**PETROL FILLER BOX ASSEMBLY, R.H. (31680/0132)**	45—34	1	
10156	**PETROL FILLER BOX ASSEMBLY, L.H. (31680/0133)**		1	
10278	**REAR WHEEL ARCH ASSEMBLY, R.H. (31680/0094)**	45—35	1	
10315	**Bracket,** upper, mounting Rear Suspension Bump Stop (11680/0707)	47—36	1	
10279	**REAR WHEEL ARCH ASSEMBLY, L.H. (31680/0095)**		1	
10315	**Bracket,** upper, mounting Rear Suspension Bump Stop (11680/0707)		1	
10280	**RECESS PANEL ASSEMBLY, HOUSING R.H. PETROL TANK (31680/0150)**	45—37	1	
10282	**Side Panel,** for R.H. Petrol Tank Recess (11680/0726)	45—38	1	
10284	**Bracket,** R.H. rear, fixing Petrol Tank Cradle (11680/0752)	45—39	1	
10286	**Bracket,** R.H. front, fixing Petrol Tank Cradle (11680/0754)	45—40	1	
10281	**RECESS PANEL ASSEMBLY, HOUSING L.H. PETROL TANK (31680/0151)**		1	
10283	**Side Panel,** for L.H. Petrol Tank Recess (11680/0727)		1	
10285	**Bracket,** L.H. rear, fixing Petrol Tank Cradle (11680/0753)		1	
10287	**Bracket,** L.H. front, fixing Petrol Tank Cradle (11680/0755)		1	

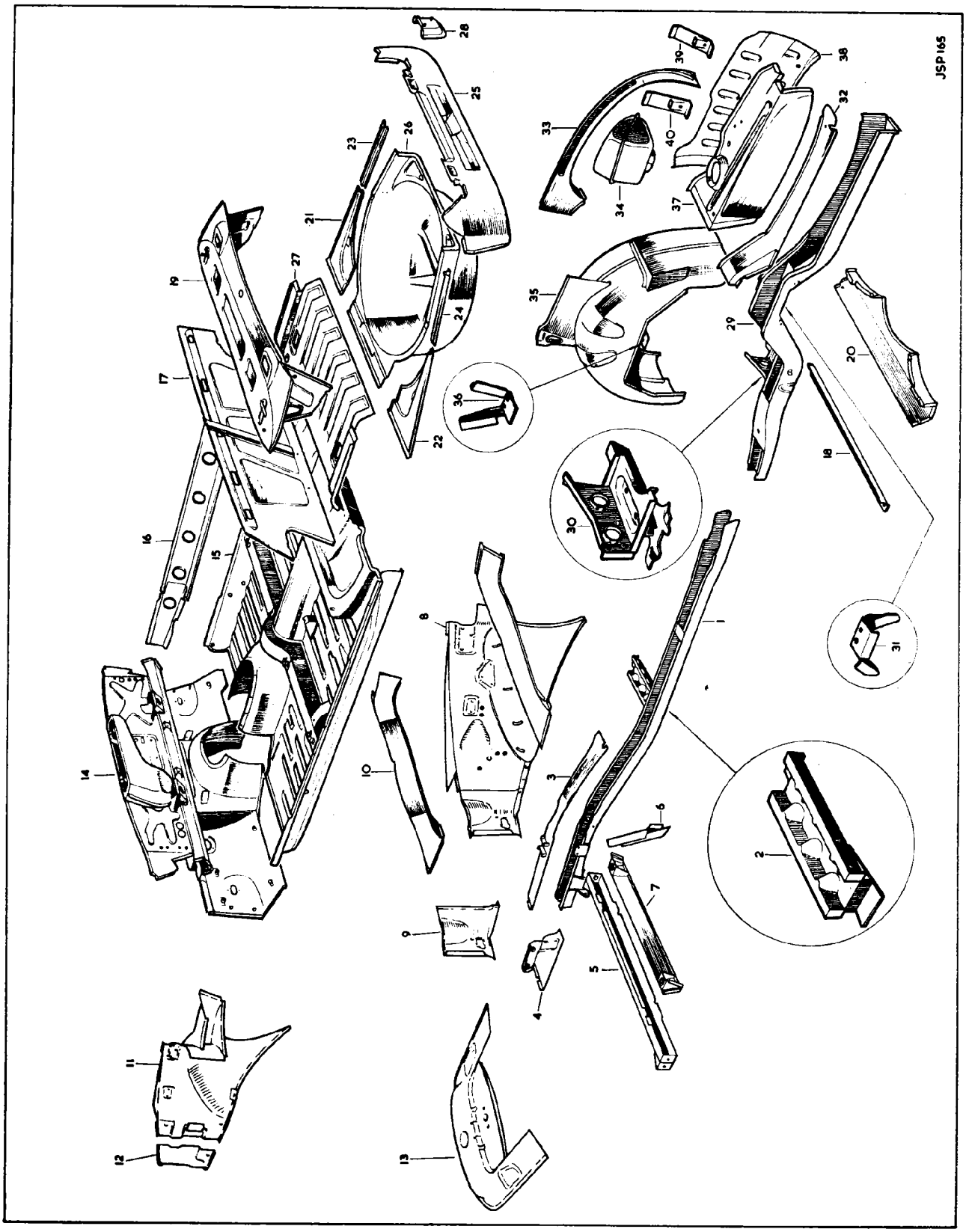
JSP165
1
2
3
4
5
6
7
8
9
10
11
12
13
14
15
16
17
18
19
20
21
22
23
24
25
26
27
28
29
30
31
32
33
34
35
36
37
38
39
40

PLATE 45

SECTION 45

BODY PANELS

Part No.	Description	Plate No.	No. per Unit	Remarks
11359	**FRONT WING ASSEMBLY, R.H. (42310/0048)**	46—1	1	
11424	**Baffle,** for R.H. Front Wing (12310/0124)	46—2	1	
11360	**FRONT WING ASSEMBLY, L.H. (42310/0049)**		1	
11425	**Baffle,** for L.H. Front Wing (12310/0125)		1	
11361	**PANEL, JOINING FRONT WINGS AT TOP OF RADIATOR GRILLE APERTURE (12310/0102)**	46—3	1	
11362	**PANEL, JOINING FRONT WINGS AT BOTTOM OF RADIATOR GRILLE APERTURE (12310/0103)**	46—4	1	
11363	**Reinforcement Panel,** at bottom of Radiator Grille Aperture (12310/0122)	46—5	1	
6602	**STAY BRACKET, FOR R.H. FRONT WING (171/238)**	46—6	1	
6603	**STAY BRACKET, FOR L.H. FRONT WING (171/239)**		1	
11403	**GUSSET, REINFORCING R.H. STAY BRACKET (12310/0136)**	46—7	1	
11383	**GUSSET, REINFORCING L.H. STAY BRACKET (12310/0137)**		1	
BD.29943	**SEAL ASSEMBLY, FOR DIAPHRAGM AT REAR OF R.H. FRONT WING**	46—8	1	
BD.10229	**Rubber Seal**		1	
BD.29945	**Retainer,** for Seal		1	
BD.17635	**Bifurcated Rivet,** securing Seal to Retainer		4	
BD.29944	**SEAL ASSEMBLY, FOR DIAPHRAGM AT REAR OF L.H. FRONT WING**		1	
BD.10229	**Rubber Seal**		1	
BD.29946	**Retainer,** for Seal		1	
BD.17653	**Bifurcated Rivet,** securing Seal to Retainer		4	
BD.1814/2	**Pop Rivet,** securing Seals to Body		12	

Part No.	Description	Plate No.	No. per Unit	Remarks
11364	**BONNET ASSEMBLY (32310/0014)**	46—9	1	
5144	**BONNET HINGE ASSEMBLY, R.H. (271/116)**	46—10	1	
BD.12751	**Spring,** on Hinge	46—11	1	
5145	**BONNET HINGE ASSEMBLY, L.H. (271/117)**		1	
BD.12751	**Spring,** on Hinge		1	
UFS.131/5R	**Screw,** Set, securing Hinge to Body (UMF.201/H.10)		6	
BD.13565/1	**Screw,** Set, securing Bonnet to Hinges (UCF.201/H.08)		4	
C.725	**Washer,** Shakeproof, on Setscrews (UWS.201)		10	
10316	**Washer,** Plain, under Shakeproof Washers (UWP.221/A)		10	
BD.12855	**RETURN SPRING, FOR BONNET CATCH (271/147)**	46—12	1	
BD.12852	**STRIKER PLATE, FOR BONNET CATCH (271/158)**	46—13	1	
BD.12853	**CATCH PLATE, FOR BONNET CATCH (271/159)**	46—14	1	
BD.18303	**BASE PLATE, FOR BONNET CATCH (271/155)**	46—15	1	
BD.12854	**SPACING BUSH, FOR BONNET CATCH (271/160)**	46—16	2	
BD.18307/5	**Screw,** Set, securing Base Plate (UMF.161/H.14)		2	
FG.104/X	**Washer,** Spring, on Setscrews (UWL.161)		2	
11404	**PEG ASSEMBLY FOR BONNET CATCH (21680/0126)**	46—17	1	
6730	**SAFETY HOOK ASSEMBLY FOR BONNET CATCH (271/153)**	46—18	1	
780	**Spring,** for Safety Hook (253/820)	46—19	1	
782	**Pin,** through Safety Hook (253/821)	46—20	1	

SECTION 45

BODY PANELS

Part No.	Description	Plate No.	No. per Unit	Remarks
5117	**LID ASSEMBLY FOR SCUTTLE VENTILATOR (371/100)**	46—21	1	
7988	**Distance Piece,** between Lid and Hinge Arms (271/230)	46—22	2	
10318	**Washer,** Plain, at each side of Hinge Arms (UWP.141/A)		4	
UFN.119/L	**Nut,** securing Ventilator Lid to Hinge Arms (UNF.101/H)		2	
C.723/A	**Washer,** Shakeproof, under Nuts (UWS.121)		2	
BD.27952	**GAUZE, FOR SCUTTLE VENTILATOR LID**	46—23	1	
UFS.819/4H	**Screw,** Set, securing Gauze		3	
C.723/A	**Washer,** Shakeproof, on Setscrews		3	
AW.102/T	**Washer,** Plain, under Shakeproof Washers		3	
8152	**WINDSCREEN RAIL, LOWER, R.H. (371/1134)**	46—24	1	
8153	**WINDSCREEN RAIL, LOWER L.H. (371/1135)**		1	
10241	**REINFORCEMENT ASSEMBLY, FOR FACIA (31680/0138)**	46—25	1	
8437	**CLOSING PANEL AT R.H. SIDE OF WINDSCREEN (171/1166)**	46—26	1	
8438	**CLOSING PANEL AT L.H. SIDE OF WINDSCREEN (171/1167)**		1	
8147	**WINDSCREEN HEADER PANEL ASSEMBLY (371/1116)**	46—27	1	
8148	**Tapped Plate,** fixing Interior Mirror (271/241)		1	
8149	**Tapped Plate,** fixing Sun Visors (171/180)		2	
8150	**Retainer,** for Sun Visor Tapped Plates (171/116)		2	
10240	**ROOF PANEL (11680/0003)**	46—28	1	
10238	**BODY SIDE ASSEMBLY, R.H. (31680/0010)**		1	
8128	**'A' Post Panel Assembly,** R.H. (371/1128)		1	
6786	**Dash Side Panel Assembly,** R.H. (31680/0726)		1	
10143	**'B/C' Post Panel Assembly,** R.H. (31680/0114)		1	
10319	**Spacer Assembly,** for R.H. 'B/C' Post (31680/0120)		1	
10145	**'D' Post Panel Assembly,** R.H. (31680/0116)		1	
10321	**Drip Moulding,** R.H. Front (11680/0122)		1	

Part No.	Description	Plate No.	No. per Unit	Remarks
	BODY SIDE ASSEMBLY, R.H. (cont'd)			
10322	**Drip Moulding,** R.H. Rear (11680/0120)		1	
10323	**Cantrail Panel,** R.H. (11680/0230)		1	
10152	**Door Sill, Panel,** R.H. (11680/0124)		1	
7712	**Retainer,** for R.H. Door Seals (171/166)		3	
10239	**BODY SIDE ASSEMBLY, L.H. (31680/0011)**		1	
8129	**'A' Post Panel Assembly,** L.H. (371/1129)		1	
6787	**Dash Side Panel Assembly,** L.H. (31680/0727)		1	
10144	**' B/C ' Post Panel Assembly,** L.H. (31680/0115)		1	
10320	**Spacer Assembly,** for L.H. ' B/C ' Post (31680/0121)		1	
10146	**' D ' Post Panel Assembly,** L.H. (31680/0117)		1	
10324	**Drip Moulding,** L.H. Front (11680/0123)		1	
10325	**Drip Moulding,** L.H. Rear (11680/0121)		1	
10326	**Cantrail Panel,** L.H. (11680/0131)		1	
10153	**Door Sill Panel,** L.H. (11680/0125)		1	
7713	**Retainer,** for L.H. Door Seals (171/167)		3	
8128	**'A' POST PANEL ASSEMBLY, R.H. (371/1128)**	46—29	1	
8129	**'A' POST PANEL ASSEMBLY, L.H. (371/1129)**		1	
6786	**DASH SIDE PANEL ASSEMBLY, R.H. (31680/0725)**	46—30	1	
6787	**DASH SIDE PANEL ASSEMBLY, L.H. (31680/0726)**		1	
7358	**Cover Plate,** Dash Side (171/235)	46—31	2	
UFS.119/3R	**Screw,** Set, securing Cover Plates (UCA.101/H.06)		8	
AG.102/X	**Washer,** Spring, on Setscrews (UWL.121/M)		8	
10143	**' B/C ' POST PANEL ASSEMBLY, R.H. (31680/0114)**	46—32	1	
6981	**Bracket,** fixing Rear Door Check Arm (171/118)		1	
10319	**Spacer Assembly,** for R.H. ' B/C ' Post (31680/0120)	46—33	1	
10144	**' B/C ' POST PANEL ASSEMBLY, L.H. (31680/0115)**		1	
6981	**Bracket,** fixing Rear Door Check Arm (171/118)		1	
10320	**Spacer Assembly,** for L.H. ' B/C ' Post (31680/0121)		1	

SECTION 45

BODY PANELS

Part No.	Description	Plate No.	No. per Unit	Remarks
10145	**'D' POST PANEL ASSEMBLY, R.H. (31680/0116)**	46—34	1	
10244	**Reinforcement,** closing R.H. 'D' Post (11680/0116)	46—35	1	
10246	**Spacer,** for R.H. 'D' Post, lower (11680/0180)	46—36	1	
10146	**'D' POST PANEL ASSEMBLY, L.H. (31680/0117)**		1	
10245	**Reinforcement,** closing L.H. 'D' Post (11680/0117)		1	
10247	**Spacer,** for L.H. 'D' Post, lower (11680/0181)		1	
10152	**DOOR SILL PANEL, R.H. (11680/0124)**	46—37	1	
7712	**Retainer,** for R.H. Door Seals (171/166)	46—38	3	
10153	**DOOR SILL PANEL, L.H. (11680/0125)**		1	
7713	**Retainer,** for L.H. Door Seals (171/167)		3	
10321	**DRIP MOULDING, R.H. FRONT (11680/0122)**	46—39	1	
10322	**DRIP MOULDING, R.H. REAR (11680/0120)**	46—40	1	
10324	**DRIP MOULDING, L.H. FRONT (11680/0123)**		1	
10325	**DRIP MOULDING, L.H. REAR (11680/0121)**		1	
10323	**CANTRAIL PANEL, R.H. (11680/0130)**	46—41	1	
10242	**Reinforcement,** closing R.H. Cantrail at centre (11680/0118)	46—42	1	
10326	**CANTRAIL PANEL, L.H. (11680/0131)**		1	
10243	**Reinforcement,** closing L.H. Cantrail at centre (11680/0119)		1	
10248	**REINFORCEMENT ASSEMBLY, AT TOP AND SIDES OF BACKLIGHT (31680/0110)**	46—43	1	

Part No.	Description	Plate No.	No. per Unit	Remarks
10249	**REINFORCEMENT, LOWER, FOR BACKLIGHT (11680/0114)**	46—44	1	
10135	**DOOR SHELL ASSEMBLY, R.H. FRONT (41680/0040)**	46—45	1	
8158	**Felt,** for Glass Stop (271/1116)		1	
10327	**Guide Spring,** for Front Door Check Arm (230/1393)	46—46	1	
7322	**Rivet,** securing Guide Spring (RT.122/007)		2	
7321	**Reinforcement Bracket,** for Check Arm (171/323)	46—47	1	
10136	**DOOR SHELL ASSEMBLY, L.H. FRONT (31680/0041)**		1	
	Individual items are as for R.H. Front Door Shell 10135			
5154	**LOWER HINGE, FOR R.H. FRONT DOOR (271/216)**	46—48	1	
5153	**UPPER HINGE, FOR R.H. FRONT DOOR (271/217)**	46—49	1	
5154	**UPPER HINGE, FOR L.H. FRONT DOOR (271/216)**		1	
5153	**LOWER HINGE, FOR L.H. FRONT DOOR (271/217)**		1	
7959	**Grease Nipple,** on Door Hinges (271/229)	46—50	4	
1490	**Screw,** Set, securing Hinges to Front Doors (230/381)		12	
BD.18351/1	**Shim,** behind Front Door Hinges (.022" thick)		As req'd	**SELECTIVE SIZES**
BD.18351/2	**Shim,** behind Front Door Hinges (.036" thick)		As req'd	**SELECTIVE SIZES**
6784	**Screw,** Set, securing Front Door Hinges to "A" Posts (UCF.201/H.10)		4	
FG.105/X	**Washer,** Spring, on Setscrews (UWL.201/M)		4	
6785	**Screw,** Set (Phillips Head) securing Front Door Hinges to 'A' Posts (UCF.203/QR.08)		8	
8167	**CHECK ARM ASSEMBLY, FOR FRONT DOORS (271/1100)**	46—51	2	
7024	**Pin,** securing Front Door Check Arms (271/210)	46—52	2	
L.102/5U	**Split Pin,** retaining Check Arm Pins (PCS.043/10)		2	
BD.19575	**Waved Washer,** on Check Arm Pins (20300/1424)		2	

SECTION 45

BODY PANELS

Part No.	Description	Plate No.	No. per Unit	Remarks
10137	**DOOR SHELL ASSEMBLY, R.H. REAR (41680/0046)**	46—53	1	
10328	**Felt,** for Glass Stop (271/1118)		1	
10327	**Guide Spring,** for Rear Door Check Arm (230/1393)	46—54	1	
7322	**Rivet,** securing Guide Spring (RT.122/007)		2	
7321	**Reinforcement Bracket,** for Check Arm (171/323)	46—55	1	
10138	**DOOR SHELL ASSEMBLY, L.H. REAR (41680/0045)**		1	
	Individual items are as for R.H. Rear Door Shell 10137			
5151	**LOWER HINGE, FOR R.H. REAR DOOR (271/212)**	46—56	1	
8163	**UPPER HINGE, FOR R.H. REAR DOOR (271/1104)**	46—57	1	
5152	**LOWER HINGE, FOR L.H. REAR DOOR (271/213)**		1	
8164	**UPPER HINGE, FOR L.H. REAR DOOR (271/1105)**		1	
7959	**Grease Nipple,** on Door Hinges (271/229)	46—58	4	
1490	**Screw,** Set, securing Lower Hinges to Doors (230/381)		6	
9725	**Screw,** Set, securing Upper Hinges to Doors (UCF.203/QR16)		8	
8166	**Shim,** for Upper Hinge (171/1202)	46—59	6	
BD.17989	**Filler Piece,** on Hinge Face of L.H. Rear Door, seating Door Seal		1	
BD.17990	**Filler Piece,** on Hinge Face of R.H. Rear Door, seating Door Seal	46—60	1	
BD.1814/1	**Pop Rivet,** securing Filler Pieces		4	
6785	**Screw,** Set (Phillips Head) securing Rear Door Hinges to 'B/C' Posts (UCF.203/QR.08)		12	
5141	**CHECK ARM ASSEMBLY, FOR REAR DOORS (271/100)**	46—61	2	
7024	**Pin,** securing Rear Door Check Arms (271/210)		2	
L.102/5U	**Split Pin,** retaining Check Arm Pins (PCS.043/10)		2	
BD.19575	**Waved Washer,** on Check Arm Pins (20300/1424)		2	
10250	**TONNEAU PANEL, BEHIND BACK-LIGHT (11680/0175)**	46—63	1	

Part No.	Description	Plate No.	No. per Unit	Remarks
10141	**REAR WING ASSEMBLY, R.H. (31680/0050)**	46—64	1	
10142	**REAR WING ASSEMBLY, L.H. (31680/0051)**		1	
9549	**Bracket Assembly,** mounting Rear Bumper at sides (31330/0228)	46—65	2	
10133	**PETROL FILLER DOOR ASSEMBLY, R.H. (31680/0128)**	46—66	1	
10134	**PETROL FILLER DOOR ASSEMBLY, L.H. (31680/0129)**		1	
10148	**HINGE BRACKET AND ARM ASSEMBLY, FOR PETROL FILLER DOORS (31680/0126)**	46—67	2	
10149	**Spring,** for Petrol Filler Doors (21680/0107)	46—68	2	
10329	**Screw,** Set, securing Arms to Petrol Filler Doors (UMA.101/H.07)		4	
UFN.119/L	**Nut,** securing Hinge Brackets to Petrol Filler Boxes (UNF.101/H)		6	
C.723/A	**Washer,** Shakeproof, on Setscrews and under Nuts (UWS.121)		10	
10318	**Washer,** Plain, under Shakeproof Washers (UWP.141/A)		10	
10132	**BOOT LID ASSEMBLY (31680/0085)**	46—69	1	
BD.19783	**Cover Plate,** for Lock Mechanism Brackets on Boot Lid (11330/0334)	46—70	2	
10150	**HINGE ASSEMBLY, R.H., FOR BOOT LID (21680/0100)**	46—71	1	
10151	**HINGE ASSEMBLY, L.H., FOR BOOT LID (21680/0101)**		1	
10063	**Clamp,** securing Hinge Torsion Bars at centre	46—72	2	
UFS.131/6R	**Screw,** Set, through Clamps		1	
UFN.131/L	**Nut,** on Setscrew		1	
C.725	**Washer,** Shakeproof, under Nut		1	
UFS.131/4R	**Screw,** Set, securing Boot Lid Hinges to Body (UMF.201/H.10)		8	
C.725	**Washer,** Shakeproof, on Setscrews (UWS.201)		8	

SECTION 45

BODY PANELS

Part No.	Description	Plate No.	No. per Unit	Remarks
9443	**ATTACHMENT BRACKET, FOR BOOT LID HINGES (11330/0105)**	46—73	2	
UFS.131/5R	**Screw,** Set, securing Brackets to Boot Lid (UMF.201/H.10)		4	
C.725	**Washer,** Shakeproof, on Setscrews (UWS.201)		4	
10316	**Washer,** Plain, under Shakeproof Washers (UWP.221/A)		4	
UFS.131/9R	**Screw,** Set, securing Brackets to Hinges (UMF.201/H.18)		4	
11545	**Washer,** Plain, on Setscrews (UWP.241/C)		8	
UFN.131/L	**Nut,** on Setscrews (UNF.201/H)		4	
C.725	**Washer,** Shakeproof, under Nuts (UWS.201)		4	
10147	**SPARE WHEEL COVER ASSEMBLY (31680/0076)**	46—74	1	
10468	**Dzus Stud** (Ring Head) securing Spare Wheel Cover (21680/0704)		1	
10469	**Grommet,** retaining Dzus Stud to Spare Wheel Cover (DZG.206/A)		1	
BD.28269	**PROP, FOR SPARE WHEEL COVER (21680/0104)**	46—75	1	
10251	**BODY PANEL ASSEMBLY, LOWER REAR OUTER (31680/0002)**	46—76	1	
BD.25977	**TAIL PANEL ASSEMBLY (COMPLETE WITH EXHAUST PIPE CUT-OUTS) (21680/0114)**	46—77	1	
	SEALING PLUGS			
BD.15588/5	**Plastic Plug,** sealing redundant Accelerator fixings and Drain Holes in Spare Wheel Well and Rear Seat Pan	46—78	7	
BD.15588/10	**Plastic Plug,** in Rear Wheel Arches		2	
BD.22756	**Plastic Plug,** sealing Seat Belt Attachment Points	46—79	8	**Not required when Safety Harness is fitted**
BD.25919	**Plastic Plug,** sealing redundant fixing holes in Floor	46—80	4	**6 required when Automatic Transmission is fitted**
BD.25294	**Plastic Plug,** sealing redundant holes in Dash	46—81	2	
BD.12309/1	**Rubber Plug** (Mushroom Head) sealing redundant holes	46—82	See Remarks	**4 required for R.H. Drive cars 6 required for L.H. Drive cars**
BD.4321	**Rubber Plug,** seating Petrol Filler Doors	46—83	4	
C.4928	**Rubber Plug,** in Jacking Tubes	46—84	4	
C.13931	**Rubber Plug,** in Accelerator Tube	46—85	1	**L.H. Drive Cars only**
BD.23386	**Steel Plug** ($\frac{3}{8}$" diameter) sealing Drain Holes	46—86	2	
BD.25150	**Steel Plug** ($\frac{1}{2}$" diameter) sealing Drain Holes	46—87	17	
BD.19721	**Steel Plug** ($\frac{7}{8}$" diameter) sealing Drain Holes	46—88	4	

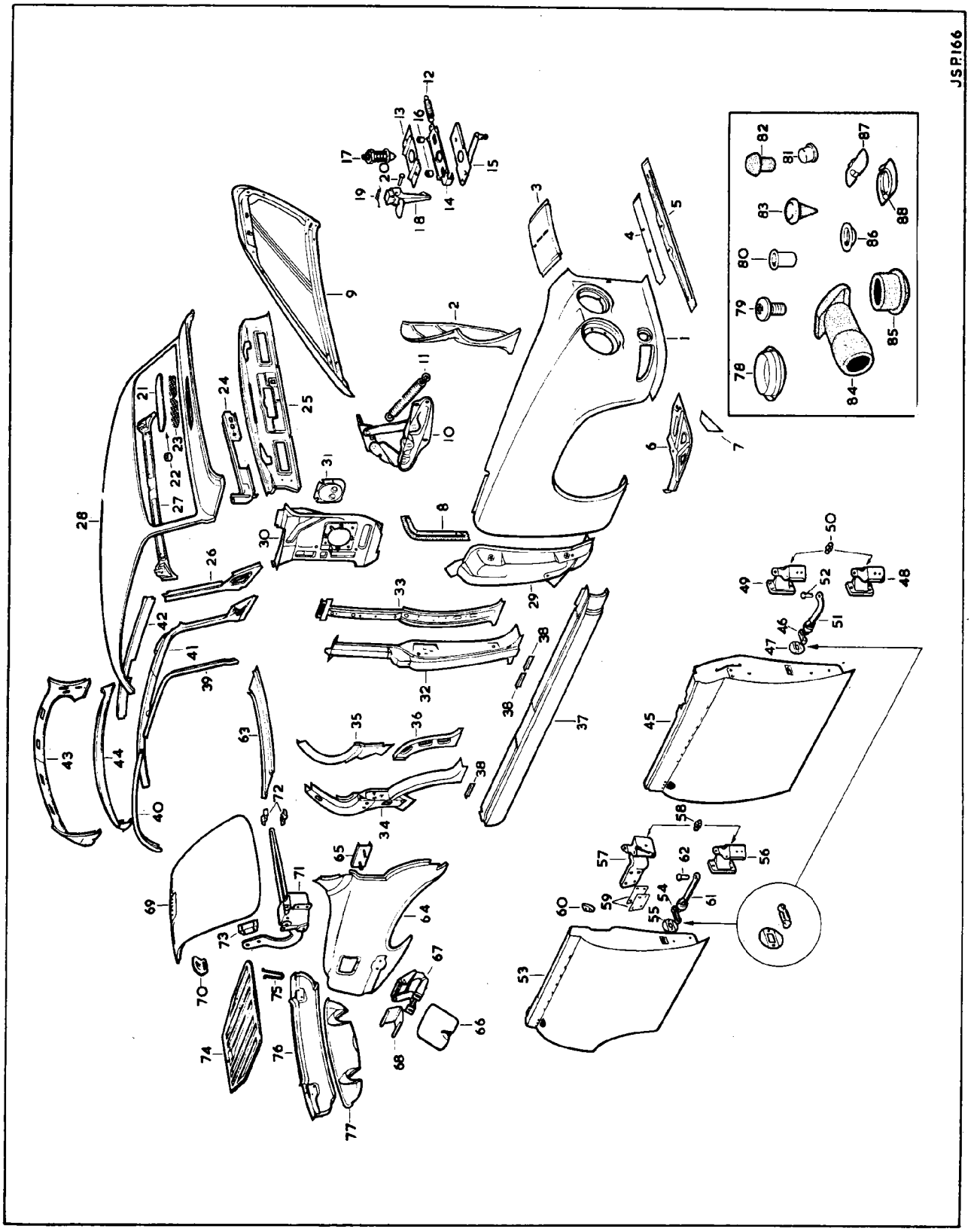

PLATE 46

SECTION 46

BODY FITTINGS

Part No.	Description	Plate No.	No. per Unit	Remarks
BD.29613	**FRONT BUMPER COMPLETE**		1	
BD.29614	**Bar Assembly only** for Front Bumper	47—1	1	
BD.29618	**Inner Bracket,** mounting Front Bumper	47—2	2	
UFS.143/7R	**Screw,** Set, securing Inner Brackets to Bumper		2	
C.727	**Washer,** Shakeproof, on Setscrews		2	
FW.107/T	**Washer,** Plain, under Shakeproof Washers		2	
BD.23963	**Outer Bracket,** at R.H. side of Front Bumper	47—3	1	
BD.23962	**Outer Bracket,** at L.H. side of Front Bumper	47—4	1	
UFS.137/8R	**Screw,** Set, securing Outer Brackets to Bumper		2	
UFN.137/L	**Nut,** on Setscrews		2	
C.726	**Washer,** Shakeproof, under Nuts		2	
FW.106/T	**Washer,** Plain, under Shakeproof Washers		2	
BD.26636	**R.H. Over-Rider Assembly**	47—5	1	
BD.26635	**L.H. Over-Rider Assembly**	47—6	1	
BD.25318	**Beading,** between Over-Riders and Bumper	47—7	4	
BD.21173	**Stud,** fixing Over-Riders to Bumper (70/51704)	47—8	2	
BD.11006	**Grip Nut,** retaining Studs	47—9	2	
BD.21174	**Spacer,** on Studs (X.70/51682)	47—10	2	
UFN.137/L	**Nut,** securing Over-Riders		2	
FG.106/X	**Washer,** Spring, under Nuts		2	
FW.206/T	**Washer,** Plain, under Spring Washers		2	
UFS.143/8R	**Screw,** Set, securing Front Bumper to Underframe		2	
C.727	**Washer,** Shakeproof, on Setscrews		2	
FW.107/T	**Washer,** Plain, under Shakeproof Washers		2	
BD.21503	**FRONT NUMBER PLATE CARRIER**	47—11	1	**NOT REQUIRED FOR U.S.A.**
BD.30614	**Carrier Bracket**	47—12	2	
UFS.431/5H	**Screw,** Set, securing Brackets to Number Plate Carrier		4	
UFN.131/L	**Nut,** on Setscrews		4	
C.725	**Washer,** Shakeproof, under Nuts		4	
FW.105/T	**Washer,** Plain, under Shakeproof Washers		4	
UFS.131/5R	**Screw,** Set, securing Brackets to Bumper		4	
UFN.131/L	**Nut,** on Setscrews		4	
FG.105/X	**Washer,** Spring, under Nuts		4	
FW.105/T	**Washer,** Plain, under Spring Washers		4	
BD.25894	**FRONT NUMBER PLATE CARRIER**		1	**REQUIRED FOR U.S.A. ONLY**
BD.29625	**Carrier Bracket**		1	
UFS.431/5H	**Screw,** Set, securing Bracket to Number Plate Carrier		1	
UFS.131/5R	**Screw,** Set, securing Bracket to Bumper		2	
UFN.131/L	**Nut,** on Setscrews		3	
C.725	**Washer,** Shakeproof, under Nuts		3	
FW.105/T	**Washer,** Plain, under Shakeproof Washers		3	
BD.30244	**FINISHER AT SIDES OF RADIATOR GRILLE**	47—13	2	
BD.30245	**Mesh,** behind Finishers	47—14	2	
BD.30253	**Backing Piece,** for Mesh	47—15	2	
BD.25644	**Plastic Bush,** securing Finishers	47—16	6	
BD.29988	**RADIATOR GRILLE ASSEMBLY, COMPLETE**		1	Fitted from Chassis No. 1F.1001 to 1F.1549 1F.25001 to 1F.25344
BD.29940	**Surround Assembly,** for Radiator Grille	47—17	1	
BD.28007	**Jaguar Badge,** at top of Surround	47—18	1	
BD.20653/1	**Housing,** for Jaguar Badge	47—19	1	
BD.14579	**Spire Nut,** securing Housing	47—20	2	

ALWAYS QUOTE COLOUR REQUIRED WHEN ORDERING TRIMMED PARTS

Part No.	Description	Plate No.	No. per Unit	Remarks
	RADIATOR GRILLE ASSEMBLY, COMPLETE (Cont'd)			
BD.29986	**Radiator Grille Assembly,** R.H.	47—21	1	
BD.29987	**Radiator Grille Assembly,** L.H.	47—22	1	
UFS.419/3H	**Screw,** Set, securing Grilles to Surround at top		3	
C.723/A	**Washer,** Shakeproof, on Setscrews		3	
AW.102/T	**Washer,** Plain, under Shakeproof Washers		3	
DAZ.408/10C	**Screw,** Self-Tapping, securing Grilles to Surround at bottom		4	
AW.102/T	**Washer,** Plain, on Self-Tapping Screws		4	
BD.29989	**Nut** (Plastic) receiving Screws		4	
BD.30459	**Steady Bar,** for Radiator Grille Vanes	47—23	1	
BD.30475/1	**Packing** (Rubber) under Steady Bar	47—24	2	
UFS.119/3R	**Screw,** Set, securing Steady Bar to Radiator Grille Surround		3	
UFN.119/L	**Nut,** on Setscrews at side fixings		2	
C.723/A	**Washer,** Shakeproof, on Setscrew and under Nuts		3	
AW.102/T	**Washer,** Plain, under Shakeproof Washers		3	
BD.31024	**RADIATOR GRILLE ASSEMBLY, COMPLETE**		1	Fitted to Chassis No. 1F.1550 and subs. 1F.25345 and subs.
BD.31023	**Surround Assembly,** for Radiator Grille		1	
BD.25644	**Friction Bush,** securing Badge Housing		2	
	All other items are as for Radiator Grille Assembly BD.29988			
UFS.119/3R	**Screw,** Set, securing Grille Assembly to Body at top centre fixing		1	Fitted from Chassis No. 1F.1001 to 1F.1549 1F.25001 to 1F.25344
C.723/A	**Washer,** Shakeproof, on Setscrew		1	
1744	**Cup Washer,** under Shakeproof Washer		1	
UFN.119/L	**Nut,** securing Grille Assembly to Body at top outer fixings		2	
C.723/A	**Washer,** Shakeproof, under Nuts		2	
AW.102/T	**Washer,** Plain, under Shakeproof Washers		2	
BD.30929	**Bracket,** mounting Grille Assembly to Body at top		1	Fitted to Chassis No. 1F.1550 and subs. 1F.25345 and subs.
UFS.119/4R	**Screw,** Set, securing Bracket to Body		2	
AW.102/T	**Washer,** Plain, on Setscrews		4	
UFN.119/L	**Nut,** on Setscrews		2	
C.723/A	**Washer,** Shakeproof, under Nuts		2	
BD.27546/2	**Screw,** Set, securing Grille Assembly to Bracket		1	
C.724	**Washer,** Shakeproof, on Setscrew		1	
BD.541/31	**Washer,** Plain, under Shakeproof Washer		1	
BD.30998/2	**Captive Nut,** receiving Setscrew		1	
BD.30605	**Stud,** fixing Grille Assembly to Body at sides	47—25	2	
UFN.119/L	**Nut,** on Studs		2	
C.723/A	**Washer,** Shakeproof, under Nuts		2	
BD.542/9	**Washer,** Plain, under Shakeproof Washers		2	
BD.30605	**Stud,** fixing Grille Assembly to Body at bottom		2	
UFN.119/L	**Nut,** on Studs		2	
C.723/A	**Washer,** Shakeproof, under Nuts		2	
AW.102/T	**Washer,** Plain, under Shakeproof Washers		2	
BD.30133	**COVER PLATE ASSEMBLY ON UNDER-FRAME FRONT CROSS MEMBER**	47—26	1	
DZZ.410/6C	**Screw,** Self-Tapping, securing Cover Plate		10	
AW.102/T	**Washer,** Plain, on Self-Tapping Screws		10	

ALWAYS QUOTE COLOUR REQUIRED WHEN ORDERING TRIMMED PARTS

SECTION 46

BODY FITTINGS

Part No.	Description	Plate No.	No. per Unit	Remarks
BD.10224	**RUBBER BUFFER FOR FRONT CORNERS OF BONNET**		2	
UFS.131/6R	**Screw**, Set, securing Rubber Buffers		2	NOT REQUIRED WHEN AIR CONDITIONING IS FITTED
UFN.231/L	**Locknut**, on Setscrews		2	
BD.30581	**RUBBER BUFFER, SEATING BONNET AT SIDES**		2	
DAC.504/8C	**Screw**, Self-Tapping, securing Rubber Buffer		2	
BD.532/1	**Cup Washer**, on Self-Tapping Screws		2	
BD.4920/3	**REST RUBBER AT REAR OF BONNET**	47—27	1	
BD.29860	**CONTROL WIRE, COMPLETE, OPERATING BONNET LOCK**	47—28	1	
C.4443	**Adjuster**, for Bonnet Lock Control	47—29	1	
C.3880	**Abutment**, for Cable Adjuster	47—30	1	
FW.104/T	**Washer**, Plain, at bottom of Abutment		1	
UFN.125/L	**Nut**, securing Abutment		1	
C.724	**Washer**, Shakeproof, under Nut		1	
BD.30130	**INSULATING PAD (GLASS FIBRE) AT R.H. SIDE OF BONNET**		1	
BD.30131	**INSULATING PAD (GLASS FIBRE) AT L.H. SIDE OF BONNET**		1	
BD.26566	**Retainer**, holding Insulating Pads at rear		2	
BD.30158	**Retainer**, holding Insulating Pads at sides		4	
BD.1814/2	**Pop Rivet**, securing Retainers		14	
BD.25231	**R.H. SUN VISOR ASSEMBLY, COMPLETE**	47—31	1	R.H. DRIVE CARS ONLY
BD.25219	**Sun Visor Assembly**		1	
BD.24165	**Friction Pivot Assembly**		1	
BD.26703	**L.H. SUN VISOR ASSEMBLY, COMPLETE**	47—32	1	
BD.26701	**Sun Visor Assembly**, with Vanity Mirror		1	
BD.24165	**Friction Pivot Assembly**		1	

ALWAYS QUOTE COLOUR REQUIRED WHEN ORDERING TRIMMED PARTS

Part No.	Description	Plate No.	No. per Unit	Remarks
BD.26702	**R.H. SUN VISOR ASSEMBLY, COMPLETE**		1	L.H. DRIVE CARS ONLY
BD.26700	**Sun Visor Assembly,** with Vanity Mirror		1	
BD.24165	**Friction Pivot Assembly**		1	
BD.25231	**L.H. SUN VISOR ASSEMBLY, COMPLETE**		1	
BD.25219	**Sun Visor Assembly**		1	
BD.24165	**Friction Pivot Assembly**		1	
BD.24165	**FRICTION PIVOT ASSEMBLY**	47—33	2	
BD.24166	**Friction Arm Assembly**		2	
BD.17713	**Base,** for Friction Arm		2	
BD.9635	**Spring,** for Friction Arm		2	
BD.541/32	**Washer,** Special, on Friction Arm		4	
C.8667/1	**Nut,** Self-Locking, securing Friction Arms		2	
BD.13642/3	**Screw,** Set, securing Sun Visors		6	
C.2017/1	**Packing Washer,** for Base		As req'd	
BD.28586	**WINDSCREEN GLASS (TOUGHENED WITH ZONED AREA)**	47—34	1	
BD.29575	**WINDSCREEN GLASS (LAMINATED)**		1	FITTED TO EXPORT CARS ONLY
BD.29575/2	**WINDSCREEN GLASS (SHADED GLASS-LAMINATED)**		1	SUPPLIED TO SPECIAL ORDER ONLY
BD.29575/1	**WINDSCREEN GLASS ("SUNDYM" GLASS LAMINATED)**		1	SUPPLIED TO SPECIAL ORDER ONLY
BD.28231	**RUBBER SEAL FOR WINDSCREEN GLASS**	47—35	1	
BD.17291	**RUBBER INSERT, FOR SEAL (121" LONG)**	47—36	1	
BD.16910	**CHROME FINISHER AT R.H. SIDE OF WINDSCREEN**	47—37	1	

ALWAYS QUOTE COLOUR REQUIRED WHEN ORDERING TRIMMED PARTS

SECTION 46

BODY FITTINGS

Part No.	Description	Plate No.	No. per Unit	Remarks
BD.16909	**CHROME FINISHER AT L.H. SIDE OF WINDSCREEN**	47—38	1	
BD.5366	**JOINT PIECE, AT CENTRE OF CHROME FINISHERS**	47—39	2	
BD.21181	**LICENCE HOLDER, ON WINDSCREEN**	47—40	1	
C.20697	**INTERIOR MIRROR ASSEMBLY**	47—41	1	
C.20697/1	**Base only**		1	
C.16407/2	**Head**		1	
BD.13642/2	**Screw,** Set, securing Mirror to Windscreen Header Panel		3	
BD.29608	**FINISHER ON R.H. 'A' POST**	47—42	1	
BD.29607	**FINISHER ON L.H. 'A' POST**	47—43	1	
BD.26064	**GEARBOX COVER**	47—44	1	NOT REQUIRED FOR CARS EQUIPPED WITH AUTOMATIC TRANSMISSION
DJZ.412/10C	**Screw,** Self-Tapping, securing Gearbox Cover to Floor		11	
BD.542/3	**Washer,** Plain, on Self-Tapping Screws		11	
BD.8536/3	**Spire Nut,** receiving Self-Tapping Screws		11	
BD.14134	**RUBBER GROMMET, ON GEARBOX COVER, FOR CHANGE-SPEED LEVER**	47—45	1	NOT REQUIRED FOR CARS EQUIPPED WITH AUTOMATIC TRANSMISSION
BD.26154	**Retaining Ring,** holding Grommet to Gearbox Cover	47—46	2	
DAZ.406/8C	**Screw,** Self-Tapping, securing Retaining Ring to Gearbox Cover		6	
BD.27266	**COVER PLATE ON GEARBOX TUNNEL**		1	
BD.27267	**Gasket,** under Cover Plate		1	
DZZ.410/8C	**Screw,** Self-Tapping, securing Cover Plate		4	
BD.29647	**RUBBER PLUG IN GEARBOX TUNNEL**		2	
BD.26735	**RUBBER SEAL FOR RECIRCULATION DOOR ON SCUTTLE FACE PANEL**		1	

ALWAYS QUOTE COLOUR REQUIRED WHEN ORDERING TRIMMED PARTS

Part No.	Description	Plate No.	No. per Unit	Remarks
BD.9876	**RUBBER SEAL FOR VENTILATOR LID AT TOP OF SCUTTLE**	47—47	1	
BD.10370	**Drain Tube,** for Ventilator		1	
BD.27772	**SHROUD, IN SCUTTLE VENTILATOR, PREVENTING ENTRY OF WATER INTO HEATER BOX**		1	
UCS.519/3H	**Screw,** Set, securing Shroud		3	
BD.5440/4	**Square Nut,** on Setscrews		3	
BD.27952	**GAUZE FOR SCUTTLE VENTILATOR LID**	47—48	1	
UFS.819/4H	**Screw,** Set, securing Gauze		3	
C.723/A	**Washer,** Shakeproof, on Setscrews		3	
AW.102/T	**Washer,** Plain, under Shakeproof Washers		3	
BD.12010	**MOUNTING ASSEMBLY, LOWER, FOR STEERING COLUMN**		1	
BD.27497	**Seal,** for Steering Column Mounting		1	
UFS.125/4R	**Screw,** Set, securing Lower Steering Column Mounting to Dash		4	
C.724	**Washer,** Shakeproof, on Setscrews		4	
C.2905/4	**Clip,** securing Steering Column in Mounting		1	
BD.14986	**TREAD PLATE, ON FRONT DOOR SILLS**	47—49	2	
?AZ.504/8C	**Screw,** Self-Tapping, securing Tread Plates		10	
BD.26231	**SCUTTLE SIDE CASING ASSEMBLY, R.H.**	47—50	1	
BD.26232	**SCUTTLE SIDE CASING ASSEMBLY, L.H.**	47—51	1	
DAC.604/14C	**Screw,** Self-Tapping, securing Side Casings		6	
BD.532/1	**Cup Washer,** on Screws		6	
BD.29432	**PARCEL TRAY ASSEMBLY (TRIMMED)**	47—52	1	**FOR USE ONLY ON R.H. DRIVE CARS EQUIPPED WITH STANDARD OR OVERDRIVE TRANSMISSION**

ALWAYS QUOTE COLOUR REQUIRED WHEN ORDERING TRIMMED PARTS

SECTION 46

BODY FITTINGS

Part No.	Description	Plate No.	No. per Unit	Remarks
BD.29433	**PARCEL TRAY ASSEMBLY (TRIMMED)**		1	**FOR USE ONLY ON L.H. DRIVE CARS EQUIPPED WITH STANDARD OR OVERDRIVE TRANSMISSION**
DJJ.408/10C	**Screw,** Self-Tapping, securing Parcel Tray to Body		2	
BD.8536/6	**Spire Nut,** on Self-Tapping Screws		2	
AW.102/T	**Washer,** Plain, on Self-Tapping Screws		2	
DAZ.410/10C	**Screw,** Self-Tapping, securing Parcel Tray to Dash Sides		4	
BD.29438	**R.H. COVER PANEL FOR STEERING COLUMN (TRIMMED)**	47—53	1	**R.H. DRIVE CARS ONLY**
BD.29439	**R.H. COVER PANEL FOR STEERING COLUMN (TRIMMED)**		1	**L.H. DRIVE CARS ONLY**
BD.29436	**L.H. COVER PANEL FOR STEERING COLUMN (TRIMMED)**	47—54	1	
BD.26308	**Acorn Nut,** securing Cover Panels		4	
AW.102/T	**Washer,** Plain, under Acorn Nuts		4	
BD.26560	**Special Nut,** securing Aerial Winder		3	**L.H. DRIVE CARS ONLY**
BD.30481	**CRASH ROLL ASSEMBLY ON PARCEL TRAY**	47—55	1	
BD.26209	**Acorn Nut,** securing Crash Roll to Parcel Tray		10	
AW.102/T	**Washer,** Plain, under Acorn Nuts		10	
BD.26605	**CHROME FINISHER ASSEMBLY, AT CENTRE OF CRASH ROLL**	47—56	1	
BD.26004	**COVER, ON PARCEL TRAY, OVER HEAT CONTROL LEVER**	47—57	1	
BD.26751	**Stud,** securing Cover to Parcel Tray		4	
BD.29131	**R.H. FRONT RECLINING SEAT ASSEMBLY, COMPLETE**	47—58	1	
BD.29132	**L.H. FRONT RECLINING SEAT ASSEMBLY, COMPLETE**		1	

Note: BD.29131 and BD.29132 covers the supply of a Fully Trimmed Seat complete with Cushion, Armrest, and Seat Slides

ALWAYS QUOTE COLOUR REQUIRED WHEN ORDERING TRIMMED PARTS

Part No.	Description	Plate No.	No. per Unit	Remarks
BD.29139	**CUSHION ASSEMBLY FOR R.H. FRONT SEAT**		1	
BD.29140	**CUSHION ASSEMBLY FOR L.H. FRONT SEAT**		1	
BD.27404	**ARMREST ASSEMBLY, COMPLETE, FOR FRONT SEATS**		2	
BD.29421	**L.H. CONTROL LEVER FOR R.H. SEAT SLIDE**	47—59	1	
BD.29422	**R.H. CONTROL LEVER FOR L.H. SEAT SLIDE**		1	
BD.26612	**KNOB ON CONTROL LEVERS**	47—60	2	
BD.30147	**CROSS BAR FOR SEAT SLIDES**	47—61	2	
UFS.119/5R	**Screw**, Set, securing Cross Bar to Control Lever		2	
UFS.119/5R	**Screw**, Set, securing Cross Bar and Control Lever to Plungers		4	
AW.102/C	**Washer**, Brass, on Setscrews		6	
C.8667/17	**Nut**, Self-Locking, on Setscrews		6	
BD.23891	**PLUNGER, LOCKING SEAT IN SELECTED POSITION**	47—62	4	
BD.22685	**Spring**, tensioning Plungers	47—63	4	
FW.105/T	**Washer**, retaining Plungers		6	
BD.25544	**Roll Pin**, behind Washers, retaining Plungers		4	
BD.29301	**SPRING ASSISTING FORWARD MOVEMENT OF FRONT SEATS**	47—64	4	
BD.24629	**Sleeve** (P.V.C.) on Spring		4	
BD.30062	**BRACKET, STEADYING R.H. CONTROL LEVER**	47—65	1	

ALWAYS QUOTE COLOUR REQUIRED WHEN ORDERING TRIMMED PARTS

SECTION 46

BODY FITTINGS

Part No.	Description	Plate No.	No. per Unit	Remarks
BD.30063	**BRACKET, STEADYING L.H. CONTROL LEVER**		1	
BD.25646	**Grommet** (Polythene) inside Brackets	47—66	2	
BD.25956	**SLIDE RATCHET FOR FRONT SEATS**	47—67	4	
BD.23854	**Slide,** for Front Seats	47—68	4	
BD.23853	**Trunnion,** on Seat Slides	47—69	4	
BD.26192	**Stop,** on forward end of Slides		4	
BD.24093	**Clevis Pin,** securing Trunnion to Front Seats	47—70	4	
BD.541/17	**Washer,** Brass, on Setscrews		4	
L.102/6U	**Split Pin,** retaining Clevis Pins		4	
UFB.131/13R	**Bolt,** securing Slide Ratchet to Slides		8	
C.18698	**Distance Piece,** between Slide and Slide Ratchets		8	
FW.105/T	**Washer,** Plain, on Bolts		12	
C.8667/2	**Nut,** Self-Locking, on Bolts		8	
UFS.131/6R	**Screw,** Set, securing Slide Ratchets to Front Floor		8	
BD.24295	**Packing Piece,** under Slide Ratchets		8	
C.740	**Washer,** Shakeproof, on Setscrews		8	
FW.105/T	**Washer,** Plain, under Shakeproof Washers		8	
BD.24626	**LEVER, FOR SQUAB RAKE CONTROL OF FRONT SEATS**	47—71	2	
BD.26839	**Knob,** for R.H. Squab Rake Control Lever	47—72	1	
BD.26838	**Knob,** for L.H. Squab Rake Control Lever		1	
DZC.006/6C	**Screw,** Self-Tapping,securing Knobs to Levers		2	
UFS.319/4H	**Screw,** Set, securing Levers to Cross Roads		2	
AG.102/X	**Washer,** Spring, on Setscrews (behind Levers)		2	
BD.30488	**Collar,** at base of Levers		2	
BD.29380	**Washer,** behind Collars		2	
BD.29307	**COVER (PLASTIC) OVER SQUAB PIVOT AT R.H. SIDE OF FRONT SEATS**		2	
BD.29308	**COVER (PLASTIC) OVER SQUAB PIVOT AT L.H. SIDE OF FRONT SEATS**		2	
DAZ.410/8C	**Screw,** Self-Tapping, securing Covers		4	
BD.541/28	**Washer,** Special, on Self-Tapping Screws		4	
BD.25971	**SEAT ANCHOR BRACKET ASSEMBLY**	47—73	2	
BD.25989	**Pivot Pin,** securing Anchor Brackets to Seats	47—74	4	
BD.24029	**Bush,** on Pivot Pins		8	
FW.104/T	**Washer,** Plain, on Pivot Pins		4	
L.102/6U	**Split Pin,** retaining Pivot Pins		4	
UFS.131/8R	**Screw,** Set, securing Seat Anchor Brackets to Floor		4	
C.740	**Washer,** Shakeproof, on Setscrews		4	
BD.542/7	**Washer,** under Shakeproof Washers		4	
BD.25973	**Packing Piece,** for Seat Anchor Brackets		As req'd	

ALWAYS QUOTE COLOUR REQUIRED WHEN ORDERING TRIMMED PARTS

Part No.	Description	Plate No.	No. per Unit	Remarks
BD.27653	**EYE BOLT, IN FRONT FLOOR, FOR SAFETY HARNESS**		4	
BD.23149	**Distance Piece,** on Eye Bolts		4	
BD.11036	**TACKING STRIP FOR "A" POSTS**		2	
BD.17409	**TACKING STRIP, LOWER, FOR "B" AND "C" POSTS**		4	
BD.17410	**TACKING STRIP, UPPER, FOR "D" POSTS**		2	
BD.11038	**TACKING STRIP, LOWER, FOR "D" POSTS**		2	
BD.27177	**TACKING STRIP, UPPER REAR QUARTER**		2	
BD.11975	**TACKING STRIP, FOR SEAT PAN, "A" POST, AND DOOR SILLS**		6	
BD.8093/1	**Screwnail,** securing Tacking Strips		50	
BD.8093/3	**Screwnail,** securing Tacking Strips		72	
BD.30549	**INSTRUMENT BOARD ASSEMBLY**	48—1	1	
BD.30550	**Crash Roll Assembly,** at bottom of Instrument Board		1	
UCN.116/L	**Nut,** securing Crash Roll to Instrument Board		3	
C.722	**Washer,** Shakeproof, under Nuts		3	
AW.102/T	**Washer,** Plain, under Shakeproof Washers		3	
BD.30550	**CRASH ROLL ASSEMBLY, AT BOTTOM OF INSTRUMENT BOARD**	48—2	1	
BD.30900	**Chrome Finisher,** at ends of Crash Roll		2	
DAC.504/8C	**Screw,** Self-Tapping, securing Finishers		2	

ALWAYS QUOTE COLOUR REQUIRED WHEN ORDERING TRIMMED PARTS

SECTION 46

BODY FITTINGS

Part No.	Description	Plate No.	No. per Unit	Remarks
BD.30445	**R.H. FACIA BOARD ASSEMBLY**	48—3	1	R.H. DRIVE CARS ONLY
BD.30444	**L.H. FACIA BOARD ASSEMBLY**	48—4	1	
BD.30443	**R.H. FACIA BOARD ASSEMBLY**		1	L.H. DRIVE CARS ONLY
BD.30446	**L.H. FACIA BOARD ASSEMBLY**		1	
BD.30617	**Bracket Assembly,** Outer, fixing Facia Boards to Body	48—5	2	
BD.30305	**Bracket,** Inner, fixing R.H. Facia Board	48—6	1	
BD.30306	**Bracket,** Inner, fixing L.H. Facia Board	48—7	1	
MJ.208/4R	**Woodscrew,** securing Brackets to Facia Boards		8	
BD.25657	**Light Seal,** at inner edge of Facia Boards	48—8	2	
C.22639	**Bracket,** for Speedometer Trip Remote Control		1	
MJ.206/4R	**Woodscrew,** securing Bracket		2	
BD.25299	**Striker,** on Facia Board, for Cubby Box Lock	48—9	1	
C.19853	**Bracket,** mounting Cubby Box Lamp Switch		1	
MJ.206/3R	**Woodscrew,** securing Striker and Bracket		4	
UFN.125/L	**Nut,** securing Facia Boards to Outer Tie Brackets		2	
C.724	**Washer,** Shakeproof, under Nuts		2	
BD.542/3	**Washer,** Plain, under Shakeproof Washers		2	
BD.21423	**Packing Washer,** at outer fixing of Facia Boards		As req'd	
UFS.119/4R	**Screw,** Set, securing Facia Boards to Inner Support Brackets		4	
C.723/A	**Washer,** Shakeproof, on Setscrews		4	
BD.541/34	**Washer,** Plain, under Shakeproof Washers		4	
UFN.119/L	**Nut,** securing Facia Boards to Crash Roll		4	
C.723/A	**Washer,** Shakeproof, under Nuts		4	
AW.102/T	**Washer,** Plain, under Shakeproof Washers		4	
DZJ.408/6C	**Screw,** Self-Tapping, securing Facia Boards to Crash Roll		2	
DZJ.408/16C	**Screw,** Self-Tapping, securing Facia Boards to Crash Roll		2	
BD.8633/5	**Spire Nut,** receiving Self-Tapping Screws		4	
BD.30615	**OUTER TIE BRACKET, ON SCREEN RAIL, FIXING R.H. FACIA BOARD**	48—10	1	
BD.30616	**OUTER TIE BRACKET, ON SCREEN RAIL, FIXING L.H. FACIA BOARD**	48—11	1	
DAZ.406/8C	**Screw,** Self-Tapping, securing Outer Tie Brackets		4	
BD.25345	**INNER SUPPORT BRACKET ASSEMBLY FOR R.H. FACIA BOARD**	48—12	1	

ALWAYS QUOTE COLOUR REQUIRED WHEN ORDERING TRIMMED PARTS

Part No.	Description	Plate No.	No. per Unit	Remarks
BD.25346	**INNER SUPPORT BRACKET ASSEMBLY FOR L.H. FACIA BOARD**	48—13	1	
UFN.125/L	**Nut,** securing Inner Support Brackets to Dash		4	
C.724	**Washer,** Shakeproof, under Nuts		4	
FW.104/T	**Washer,** Plain, under Shakeproof Washers		4	
BD.25652	**R.H. CUBBY BOX ASSEMBLY**		1	**L.H. DRIVE CARS ONLY**
BD.25653/2	**Back Panel,** in Cubby Box		1	
DJJ.406/6C	**Screw,** Self-Tapping, securing Back Panel		3	
BD.8536/9	**Spire Nut,** receiving Self-Tapping Screws		3	
BD.25653	**L.H. CUBBY BOX ASSEMBLY**	48—14	1	**R.H. DRIVE CARS ONLY**
	Individual items are as for Cubby Box BD.25652			
MJ.206/4R	**Woodscrew,** securing Cubby Box to Facia Board		12	
AW.104/T	**Washer,** Plain, on Woodscrews		12	
BD.30559	**LID ASSEMBLY FOR CUBBY BOX ON R.H. FACIA BOARD**		1	**L.H. DRIVE CARS ONLY**
BD.30558	**LID ASSEMBLY FOR CUBBY BOX ON L.H. FACIA BOARD**	48—15	1	**R.H. DRIVE CARS ONLY**
BD.573	**Hinge,** for Cubby Box Lid	48—16	2	
MC.103/4K	**Woodscrew,** securing Hinges		8	
BD.12735	**Quadrant Assembly,** for Cubby Box Lid	48—17	1	
BD.12358	**Stop Plate Assembly**	48—18	1	
MC.103/4K	**Woodscrew,** securing Quadrant and Stop Plate		4	
BD.12326	**Handle,** on Cubby Box Lid	48—19	1	
MC.303/6R	**Woodscrew,** securing Handle		1	
BD.24296	**LOCK ASSEMBLY FOR CUBBY BOX LID (7/25400)**	48—20	1	
BD.24152	**Screwed Ring,** securing Lock to Lid (7/24056)		1	
BD.24673	**Barrel,** for Lock (7/6586)		1	
BD.30547	**CRASH ROLL ASSEMBLY SURROUNDING FACIA BOARDS**	48—21	1	**R.H. DRIVE CARS ONLY**
BD.30900	**Chrome Finisher,** at lower ends of Crash Roll		2	
DAC.504/8C	**Screw,** Self-Tapping, securing Chrome Finishers		2	
BD.30745	**Cable Shield,** in Steering Column Cut-Out		1	
BD.1814/1	**Pop Rivet,** securing Cable Shield		2	

ALWAYS QUOTE COLOUR REQUIRED WHEN ORDERING TRIMMED PARTS

SECTION 46

BODY FITTINGS

Part No.	Description	Plate No.	No. per Unit	Remarks
BD.30548	**CRASH ROLL ASSEMBLY, SURROUNDING FACIA BOARDS**		1	L.H. DRIVE CARS ONLY
	Individual items are as for Crash Roll BD.30547			
BD.26657	**TIE BRACKET ON SCREEN RAIL, STEADYING CRASH ROLL**	48—22	2	
DAZ.408/8C	**Screw,** Self-Tapping, securing Tie Brackets		4	
BD.8291/4	**Screw,** Set, securing Crash Roll and Tie Brackets to Facia Support Brackets		2	
C.724	**Washer,** Shakeproof, on Setscrews		2	
BD.541/9	**Washer,** Plain, under Shakeproof Washers		2	
BD.25973	**Packing,** on Setscrews		As req'd	
BD.30663	**BRACKET ASSEMBLY, MOUNTING CRASH ROLL TO DASH SIDES**	48—23	2	
UFS.125/5R	**Screw,** Set, securing Brackets to Crash Roll		2	
UFN.125/L	**Nut,** securing Brackets to Dash Sides		2	
C.724	**Washer,** Shakeproof, on Setscrews and under Nuts		4	
BD.542/3	**Washer,** Plain, under Shakeproof Washers		4	
BD.17659	**CAPPING FOR R.H. "A" POST**	48—24	1	
BD.17658	**CAPPING FOR L.H. "A" POST**		1	
DAC.604/12C	**Screw,** Self-Tapping, securing Cappings at lower fixing		2	
BD.532/1	**Cup Washer,** on Self-Tapping Screws		2	
DAZ.404/12C	**Screw,** Self-Tapping, securing Cappings at upper fixing		2	
BD.17674	**CAPPING AT TOP R.H. SIDE OF WINDSCREEN**	48—25	1	
BD.17673	**CAPPING AT TOP L.H. SIDE OF WINDSCREEN**	48—26	1	
DAC.604/12C	**Screw,** Self-Tapping, securing Cappings		6	
BD.17314	**CAPPING ASSEMBLY, AT FRONT OF R.H. CANTRAIL**	48—27	1	
BD.17313	**CAPPING ASSEMBLY, AT FRONT OF L.H. CANTRAIL**		1	
DAZ.404/10C	**Screw,** Self-Tapping, securing Cappings		8	

ALWAYS QUOTE COLOUR REQUIRED WHEN ORDERING TRIMMED PARTS

Part No.	Description	Plate No.	No. per Unit	Remarks
BD.17776	**END FINISHER, FOR FRONT CANT-RAIL CAPPINGS**	48—28	2	
M.102/4R	**Woodscrew**, securing End Finishers		2	
BD.27990	**CAPPING ASSEMBLY AT REAR OF R.H. CANTRAIL**	48—29	1	
BD.27991	**CAPPING ASSEMBLY AT REAR OF L.H. CANTRAIL**		1	
BD.17988	**Fixing Plate**, at rear end of Cappings		2	
M.104/3R	**Woodscrew**, securing Fixing Plate to Cappings		4	
DAZ.404/10C	**Screw**, Self-Tapping, securing Cappings		8	
BD.27966	**Coat Hook**, on Cantrail Rear Cappings	48—30	2	
UCS.516/2H	**Screw**, Set, securing Coat Hooks to Cappings		2	
BD.27988	**Washer**, on Setscrews		2	
BD.26159	**CAPPING, BETWEEN CANTRAIL CAPPINGS, MOUNTING INTERIOR LAMPS ON "B/C" POSTS**	48—31	2	
DA.506/20C	**Screw**, Self-Tapping, securing Cappings		4	
BD.2623·	**UPPER FACIA FOR "B/C" POSTS**	48—32	2	
BD.14130	**Spring Clip**, securing Facias to " B/C " Posts		4	
MJ.206/3R	**Woodscrew**, securing Clips to Facias		8	
BD.22696	**BUTTON (CHROME) IN "B/C" POST UPPER FACIAS**		2	**NOT REQUIRED WHEN SAFETY HARNESS IS FITTED**
BD.31272	**TRIM PANEL ASSEMBLY FOR "B/C" POSTS**	48—33	2	
BD.24953	**Clip**, securing Trim Panel		12	
BD.17318	**Tie Plate**, at top of Trim Panels		2	
DAZ.406/8C	**Screw**, Self-Tapping, securing Tie Plates (and Trim Pads) to Trim Panels		4	
BD.30403	**TRIM PAD ASSEMBLY AT TOP OF 'B/C' POST TRIM PANELS**	48—34	2	
BD.30472	**CAPPING AT TOP OF TRIM PADS**	48—35	2	
DAZ.504/8C	**Screw**, Self-Tapping, securing Cappings		4	

ALWAYS QUOTE COLOUR REQUIRED WHEN ORDERING TRIMMED PARTS

SECTION 46

BODY FITTINGS

Part No.	Description	Plate No.	No. per Unit	Remarks
BD.26137	**CAPPING FOR R.H. FRONT DOOR**	48—36	1	
BD.26136	**CAPPING FOR L.H. REAR DOOR**		1	
DAC.604/12C	**Screw**, Self-Tapping, securing Cappings		8	
BD.543/1	**Cup Washer**, on Screws		8	
BD.26139	**CAPPING FOR R.H. REAR DOOR**	48—37	1	
BD.26138	**CAPPING FOR L.H. FRONT DOOR**		1	
DAC.604/12C	**Screw**, Self-Tapping, securing Cappings		8	
BD.543/1	**Cup Washer**, on Screws		8	
BD.26927	**CONSOLE ASSEMBLY (TRIMMED)**	48—38	1	**NOT REQUIRED FOR CARS EQUIPPED WITH AUTOMATIC TRANSMISSION**
BD.19984	**Bezel and Grille Assembly**, for Radio Loudspeaker	48—39	2	
UCN.113/L	**Nut**, securing Bezel and Grille Assemblies to Console		8	
C.721	**Washer**, Shakeproof, under Nuts		8	
AW.104/T	**Washer**, Plain, under Shakeproof Washers		8	
BD.25981	**Air Box Assembly**		1	
DAZ.114/10C	**Screw**, Self-Tapping, securing Air Box Assembly to Console		2	
BD.541/32	**Special Washer**, on Self-Tapping Screws		2	
BD.26698	**Gauntlet**, for Change-Speed Lever		1	
BD.21891/2	**Strip**, in Gauntlet Aperture		1	
BD.19728	**Ferrule**, at top of Gauntlet		1	
BD.19729	**Base**, for Ferrule		1	
DAZ.410/10C	**Screw**, Self-Tapping, securing Air Box Assembly to Tunnel		2	
BD.8536/7	**Spire Nut**, receiving Self-Tapping Screws		2	
BD.25685	**RADIO PANEL ASSEMBLY**	48—40	1	
BD.25406	**Radio Panel**		1	
BD.25368	**R.H. Attachment Bracket**, for Radio	48—41	1	
BD.25367	**L.H. Attachment Bracket**, for Radio	48—42	1	
DA.406/8C	**Screw**, Self-Tapping, securing Brackets to Radio Panel		4	
BD.25365	**Bezel**, for Heater Control ("Air", "Heat", Off")		1	
BD.25366	**Plate**, behind Bezel		1	
UCS.416/5H	**Screw**, Set, securing Radio Panel, lower		2	
BD.25686	**Special Screw**, securing Radio Panel, Upper		2	
C.723/A	**Washer**, Shakeproof, on Special Screws		2	
AW.102/T	**Washer**, Plain, under Shakeproof Washers		2	
BD.21979	**MOUNTING PLATE ASSEMBLY FOR RADIO**	48—43	1	
M.106/4R	**Woodscrew**, securing Mounting Plate to Radio Panel		5	

ALWAYS QUOTE COLOUR REQUIRED WHEN ORDERING TRIMMED PARTS

Part No.	Description	Plate No.	No. per Unit	Remarks
BD.23289	**FILLER PANEL IN RADIO CONTROL UNIT APERTURE**	48—44	1	NOT REQUIRED WHEN RADIO IS FITTED
BD.24087	**ASH TRAY BASE AND ROLLERS ASSEMBLY**	48—45	1	
DAZ.404/12C	**Screw**, Self-Tapping, securing Base to Facia		4	
BD.24088	**ASH TRAY SLIDE AND STUBBER ASSEMBLY**	48—46	1	
BD.21115	**Stubber Assembly only**		1	
BD.22805	**Rivet**, securing Stubber to Slide		1	
BD.26740	**Leaf Spring**, restricting movement of Ash Tray Slide		1	
BD.26121	**CAPPING ON ASH TRAY SLIDE**	48—47	1	
DAJ.206/6C	**Screw**, Self-Tapping, securing Capping to Ash Tray Slide		2	
BD.24425	**Pull**, at centre of Capping	48—48	1	
DA.504/12C	**Screw**, Self-Tapping, securing Pull to Capping		2	
BD.23944	**TRIM PANEL ASSEMBLY, ON WIND-SCREEN HEADER RAIL**	49—1	1	
DA.404/6C	**Screw**, Self-Tapping, securing Trim Panel		4	
BD.28346	**HEAD LINING**		1	
BD.25517	**TRIM ROLL ASSEMBLY, ABOVE R.H. CANTRAIL**	49—2	1	
BD.25516	**TRIM ROLL ASSEMBLY, ABOVE L.H. CANTRAIL**		1	
DA.404/6C	**Screw**, Self-Tapping, securing Trim Panels		10	
BD.26174	**Chrome Finisher**, at rear of R.H. Trim Roll	49—3	1	
BD.26173	**Chrome Finisher**, at rear of L.H. Trim Roll		1	
DA.404/6C	**Screw**, Self-Tapping, securing Finishers		2	
BD.25519	**TRIM PANEL ASSEMBLY, BETWEEN TRIM ROLL AND R.H. CANTRAIL CAPPING**	49—4	1	

ALWAYS QUOTE COLOUR REQUIRED WHEN ORDERING TRIMMED PARTS

SECTION 46

BODY FITTINGS

Part No.	Description	Plate No.	No. per Unit	Remarks
BD.25518	**TRIM PANEL ASSEMBLY, BETWEEN TRIM ROLL AND L.H. CANTRAIL CAPPING**		1	
DA.404/8C	**Screw**, Self-Tapping, securing Trim Panels		10	
C.22304	**INTERIOR LAMP AT TOP OF CENTRE PILLARS (6352)**	49—5	2	
10184	**Lens, Shield and Plinth Assembly** (03737)		2	**See also Electrical Equipment**
10185	**Base Assembly** (03738)		2	
7880	**Bulb** (12v. 6 w. Festoon) (254)		2	
DZC.404/6C	**Screw**, Self-Tapping, securing Interior Lamp to Cappings		4	
BD.25523	**R.H. TRIM ROLL ASSEMBLY, AT REAR OF ROOF**	49—6	1	
BD.25522	**L.H. TRIM ROLL ASSEMBLY, AT REAR OF ROOF**		1	
BD.25974	**Clip**, retaining Trim Rolls		10	
BD.25379	**Bracket**, fixing R.H. Rear Trim Roll	49—7	1	
BD.25378	**Bracket**, fixing L.H. Rear Trim Roll		1	
DA.404/6C	**Screw**, Self-Tapping, securing Brackets		8	
C.22304	**INTERIOR LAMP BETWEEN REAR TRIM ROLLS (6352)**	49—8	1	
10184	**Lens, Shield, and Plinth Assembly** (03737)		1	
10185	**Base Assembly** (03738)		1	**See also Electrical Equipment**
7880	**Bulb** (12v. 6w. Festoon) (254)		1	
DJJ.504/8C	**Screw**, Self-Tapping, securing Interior Lamp between Trim Rolls		2	
BD.8633/9	**Spire Nut**, receiving Self-Tapping Screws		2	
BD.25520	**TRIM PANEL ASSEMBLY, ABOVE AND AT SIDES OF BACKLIGHT**	49—9	1	
BD.18068	**Clip**, retaining Trim Panel		10	
BD.25087	**BACKLIGHT GLASS (CLEAR GLASS)**	49—10	1	**STANDARD FITMENT**
BD.28240	**BACKLIGHT GLASS (SUNDYM GLASS)**		1	**SUPPLIED TO SPECIAL ORDER ONLY**

ALWAYS QUOTE COLOUR REQUIRED WHEN ORDERING TRIMMED PARTS

Part No.	Description	Plate No.	No. per Unit	Remarks
BD.25283	**BACKLIGHT GLASS (CLEAR GLASS) (ALTERNATIVE TO BD.25284)**		1	ELECTRICALLY HEATED SUPPLIED TO SPECIAL ORDER ONLY
BD.25284	**BACKLIGHT GLASS (SUNDYM GLASS) (ALTERNATIVE TO BD.25283)**		1	
BD.25297	**RUBBER SEAL AROUND BACKLIGHT GLASS**	49—11	1	STANDARD FITMENT
BD.27125	**RUBBER SEAL AROUND BACKLIGHT GLASS**		1	FOR USE WITH ELECTRICALLY HEATED BACKLIGHT
BD.25298	**Insert,** for Rubber Seal	49—12	1	
BD.25304	**CHROME FINISHER AT R.H. SIDE OF BACKLIGHT GLASS**	49—13	1	
BD.25303	**CHROME FINISHER AT L.H. SIDE OF BACKLIGHT GLASS**	49—14	1	
BD.19837	**JOINT PIECE FOR CHROME FINISHERS**	49—15	2	
BD.25119	**TRIM STRIP ASSEMBLY ON PARCEL SHELF**	49—16	1	
BD.21962	**Clip,** securing Trim Strip		11	
BD.30250	**TRIM PANEL ASSEMBLY ON PARCEL SHELF**	49—17	1	NOT REQUIRED WHEN AIR CONDITIONING IS FITTED
BD.21902	**Clip,** retaining Trim Panel		3	
BD.25798	**CUSHION ASSEMBLY FOR REAR SEAT**	49—18	1	

ALWAYS QUOTE COLOUR REQUIRED WHEN ORDERING TRIMMED PARTS

SECTION 46

BODY FITTINGS

Part No.	Description	Plate No.	No. per Unit	Remarks
BD.25727	**REAR SEAT SQUAB ASSEMBLY**	49—19	1	
BD.25854	**Centre Arm Rest Assembly**	49—20	1	
BD.25400	**Hinge Linkage Assembly,** at R.H. side of Armrest		1	
BD.25401	**Hinge Linkage Assembly,** at L.H. side of Armrest		1	
MC.108/10R	**Woodscrew,** securing Hinge Linkage to Armrest		6	
UFS.125/4R	**Screw,** Set, securing Hinge Linkage to Squab		4	
C.724	**Washer,** Shakeproof, on Setscrews		4	
FW.104/T	**Washer,** Plain, under Shakeproof Washers		4	
BD.13819/6	**Screw,** Set, securing Rear Seat Squab to Body		2	
C.724	**Washer,** Shakeproof, on Setscrews		2	
BD.542/3	**Washer,** Plain, under Shakeproof Washers		2	
BD.26335	**TRIM PANEL ASSEMBLY FOR R.H. REAR QUARTER**	49—21	1	
BD.26334	**TRIM PANEL ASSEMBLY FOR L.H. REAR QUARTER**	49—22	1	
DAC.604/12C	**Screw,** Self-Tapping, securing Trim Panels		4	
BD.532/1	**Cup Washer,** on Screws		4	
DAZ.404/12C	**Screw,** Self-Tapping, securing Trim Panels		2	
BD.26339	**TRIM PANEL ASSEMBLY FOR R.H. REAR WHEEL ARCH**	49—23	1	
BD.26338	**TRIM PANEL ASSEMBLY FOR L.H. REAR WHEEL ARCH**	49—24	1	
DAC.604/16C	**Screw,** Self-Tapping, securing Wheel Arch Trim Panels		6	
BD.532/1	**Cup Washer,** on Screws		6	
BD.14988	**TREAD PLATE ON REAR DOOR SILLS**	49—25	2	
DA.504/8C	**Screw,** Self-Tapping, securing Tread Plates		6	
BD.4951	**RUBBER BUFFER FOR REAR DOOR STOP**	49—26	2	
BD.26466	**MAT ASSEMBLY ON BOOT FLOOR**	49—27	1	**NOT REQUIRED WHEN AIR CONDITIONING IS FITTED**

ALWAYS QUOTE COLOUR REQUIRED WHEN ORDERING TRIMMED PARTS

Part No.	Description	Plate No.	No. per Unit	Remarks
BD.1286	**DURABLE DOT FASTENER SECURING MAT TO BOOT FLOOR**		5	
BD.1286/1	**Button only**		5	
BD.1286/2	**Socket only**		5	
BD.1286/3	**Stud only**		5	
BD.1814/2	**Pop Rivet,** securing Fasteners to Floor		5	
BD.20387	**COVER PLATE, IN BOOT FLOOR, OVER REAR SUSPENSION**		2	**NOT REQUIRED WHEN AIR CONDITIONING IS FITTED**
BD.20388	**Rubber Gasket,** under Cover Plates		2	
DAZ.408/8C	**Screw,** Self-Tapping, securing Cover Plates		8	
BD.11007	**SPARE WHEEL CLAMP ASSEMBLY**	49—28	1	
BD.10637	**Handle,** operating Spare Wheel Clamp		1	
BD.11008	**Screw,** for Clamp		1	
BD.10639	**Plate,** on Screw, holding down Spare Wheel		1	
C.704/1	**Mills Pin,** securing Handle to Screw		1	
BD.10993	**TOOL CONTAINER ASSEMBLY**	49—29	1	
BD.25902	**STRAP SECURING JACK IN BOOT FLOOR**	49—30	1	
BD.25900	**Hook Buckle,** for Strap	49—31	1	
BD.25901	**Toggle Clamp,** for Strap	49—32	1	
BD.26084	**Pivot Bolt,** securing Strap to Floor	49—33	1	
C.8737/1	**Nut,** Self-Locking, on Pivot Bolt		1	
BD.541/31	**Washer,** Plain, under Nut		1	
BD.21899	**RUBBER GROMMET CUSHIONING JACK**	49—34	2	
BD.25925	**Rubber Strip,** retaining Jack	49—35	1	
BD.26738	**RUBBER STOP FOR JACK HANDLE**	49—36	1	
DAZ.810/12C	**Screw,** Self-Tapping, securing Rubber Stop		1	
AW.102/T	**Washer,** Plain, on Self-Tapping Screw		1	
BD.25922	**RUBBER CLIP SECURING WHEEL BRACE**	49—37	1	
BD.25923	**Retaining Clip,** securing Rubber Clip		1	
DA.506/12C	**Screw,** Self-Tapping, securing Retaining Clip to Body		2	

ALWAYS QUOTE COLOUR REQUIRED WHEN ORDERING TRIMMED PARTS

SECTION 46

BODY FITTINGS

Part No.	Description	Plate No.	No. per Unit	Remarks
BD.25926	**GROMMET (POLYTHENE) SECURING WHEEL BRACE**	49—38	1	
BD.26359	**CASING AT R.H. SIDE OF BOOT**	49—39	1	
BD.26360	**CASING AT L.H. SIDE OF BOOT**	49—40	1	
DAJ.604/8C	**Screw,** Self-Tapping, securing Casings		8	
BD.532/6	**Cup Washer,** on Self-Tapping Screws		8	
BD.26217	**COVER AT REAR OF BOOT LID**		1	
DJJ.606/8C	**Screw,** Self-Tapping, securing Cover		2	
BD.532/7	**Cup Washer,** on Self-Tapping Screws		2	
BD.8633/4	**Spire Nut,** receiving Self-Tapping Screws		2	
BD.20058	**BOOT LID LOCK CONTROL ASSEMBLY (WB.3/16196)**	49—41	1	
BD.21029	**Locking Barrel,** in Boot Lid Lock Control (WB.3/16132)		1	
BD.20063	**Gasket,** between Lock Control and Boot Lid (WB.3/16140)		1	
UFS.119/4R	**Screw,** Set, securing Lock Control		3	
C.723/A	**Washer,** Shakeproof, on Setscrews		3	
AW.102/T	**Washer,** Plain, under Shakeproof Washers		3	
BD.25347	**RELEASE MECHANISM ASSEMBLY FOR OPERATION OF BOOT LID LOCKS (WB.3/12006)**	49—43	1	
BD.19573	**Clip,** retaining Release Mechanism to Control and Locks		3	
BD.19575	**Waved Washer,** on Locks, behind Clips		2	
UFS.125/4R	**Screw,** Set, securing Release Mechanism		2	
C.724	**Washer,** Shakeproof, on Setscrews		2	
BD.541/20	**Washer,** Plain, under Shakeproof Washers		2	
BD.20061	**LOCK ASSEMBLY AT R.H. SIDE OF BOOT LID (WB.3/16193)**	49—44	1	
BD.20060	**LOCK ASSEMBLY AT L.H. SIDE OF BOOT LID (WB.3/16194)**	49—45	1	
AS.402/5H	**Screw,** Set, securing Locks		8	
C.723	**Washer,** Shakeproof, on Setscrews		8	
AW.102/T	**Washer,** Plain, under Shakeproof Washers		8	

ALWAYS QUOTE COLOUR REQUIRED WHEN ORDERING TRIMMED PARTS

Part No.	Description	Plate No.	No. per Unit	Remarks
BD.20062	**STRIKER FOR BOOT LID LOCKS (WB.3/18579)**	49—46	2	
UFS.525/4H	**Screw,** Set, securing Strikers		4	
BD.2906/5	**Washer,** Shakeproof, on Setscrews		4	
BD.19780	**Shim,** for adjustment of Strikers (11330/0287)		As req'd	
BD.21896	**RUBBER BUFFER AT LOWER EDGE OF BOOT LID**		2	
DAC.504/8C	**Screw,** Self-Tapping, securing Buffers		2	
BD.532/1	**Cup Washer,** on Self-Tapping Screws		2	
BD.21528/2	**SEALING RUBBER AROUND BOOT LID APERTURE (148" LONG)**	49—47	1	
BD.6581	**RUBBER PLUG IN SLOTS OF REAR NUMBER PLATE PANEL**	49—48	4	
BD.20886	**CHROME BEADING AT SIDES OF REAR NUMBER PLATE PANEL**	49—49	2	
BD.20887	**Nylon Bolt,** securing Beading	49—50	6	
BD.21040	**Special Nut,** on Nylon Bolts		6	
BD.22444	**Sealing Ring** (Polythene) under Nuts		6	
C.17188	**REAR NUMBER PLATE ILLUMINATION LAMP (53943/D)**	49—51	1	**NOT REQUIRED FOR CARS EXPORTED TO FRANCE**
C.17189	**REAR NUMBER PLATE ILLUMINATION LAMP (53944/D)**		1	**FOR USE ON CARS EXPORTED TO FRANCE**
BD.9868/3	**Beading,** between Number Plate Lamp and Boot Lid	49—52	1	
BD.26762	**"JAGUAR" EMBLEM ON BOOT LID**	49—53	1	
BD.25659	**Friction Bush,** securing Emblem		3	
BD.29947	**"420" EMBLEM ON BOOT LID**	49—54	1	
BD.25659	**Friction Bush,** securing Emblem		2	
BD.4321	**RUBBER STOP FOR PETROL FILLER DOORS**		4	

ALWAYS QUOTE COLOUR REQUIRED WHEN ORDERING TRIMMED PARTS

SECTION 46

BODY FITTINGS

Part No.	Description	Plate No.	No. per Unit	Remarks
BD.25310	**REAR BUMPER ASSEMBLY, COMPLETE**		1	
BD.25215	**Bar Assembly only**	49—55	1	
BD.25274	**Over-Rider Assembly,** at R.H. side of Rear Bumper	49—56	1	
BD.25275	**Over-Rider Assembly,** at L.H. side of Rear Bumper	49—57	1	
BD.25318	**Beading,** between Over-Riders and Rear Bumper	49—58	4	
UFB.125/8R	**Bolt,** securing Over-Riders to Bumper		2	
FG.104/X	**Washer,** Spring, on Bolts		2	
FW.204/T	**Washer,** Plain, under Spring Washers		2	
BD.21172	**Grip Nut,** receiving Bolts		2	
BD.25296	**Stud,** fixing Over-Riders to Rear Bumper	49—59	2	
BD.11006	**Grip Nut,** receiving Studs		2	
UFN.137/L	**Nut,** securing Over-Riders to Rear Bumper		2	
FG.106/X	**Washer,** Spring, under Nuts		2	
FW.206/T	**Washer,** Plain, under Spring Washers		2	
BD.9927	**REAR BUMPER MOUNTING (RUBBER)**	49—60	4	
UFN.131/L	**Nut,** securing Mountings to Body at Rear		4	
BD.21376	**Dome Nut,** securing Mountings to Body at sides		4	
FG.105/X	**Washer,** Spring, under Nuts		8	
BD.25217	**BRACKET, R.H. INNER, FIXING REAR BUMPER TO BODY**	49—61	1	
BD.25216	**BRACKET, L.H. INNER, FIXING REAR BUMPER TO BODY**	49—62	1	
BD.25218	**BRACKET, OUTER, FIXING REAR BUMPER TO BODY**	49—63	2	
BD.9604/1	**Screw,** Set, securing Outer Brackets to Rear Bumper		4	
BD.9604/3	**Screw,** Set, securing Inner Brackets to Rear Bumper		4	
C.726	**Washer,** Shakeproof, on Setscrews		8	
FW.106/T	**Washer,** Plain, under Shakeproof Washers		8	
BD.11006	**Grip Nut,** receiving Setscrews		8	
BD.9603/1	**Screw,** Set, securing Brackets to Rubber Mountings		4	
C.728	**Washer,** Shakeproof, on Setscrews		4	
FW.108/T	**Washer,** Plain, under Shakeproof Washers		4	
BD.25226	**LOCK ASSEMBLY, IN R.H. FRONT DOOR (WB.3/11900)**		1	
BD.25225	**LOCK ASSEMBLY, IN L.H. FRONT DOOR (WB.3/11901)**	50—1	1	
BD.25228	**DOVETAIL PLATE, ON R.H. FRONT DOOR SHUT FACE (WB.3/11611)**		1	

ALWAYS QUOTE COLOUR REQUIRED WHEN ORDERING TRIMMED PARTS

Part No.	Description	Plate No.	No. per Unit	Remarks
BD.25227	**DOVETAIL PLATE, ON L.H. FRONT DOOR SHUT FACE (WB.3/11612)**	50—2	1	
BD.16940/2	**Screw,** Set (Countersunk Head) securing Dovetail Plates		6	
BD.25230	**STRIKER ASSEMBLY FOR R.H. FRONT DOOR LOCK (WB.3/11540)**		1	
BD.25229	**STRIKER ASSEMBLY FOR L.H. FRONT DOOR LOCK (WB.3/11541)**	50—3	1	
BD.26803	**Shim,** behind Strikers (.080" thick)		As req'd	**SELECTIVE SIZES**
BD.26804	**Shim,** behind Strikers (.048" thick)		As req'd	**SELECTIVE SIZES**
BD.21509/7	**Screw,** Set, securing Strikers to " B/C " Posts		6	
BD.10728	**INSIDE HANDLE FOR FRONT DOORS (WB.1/3889)**	50—4	2	
BD.24952/2	**Rubber Thrust Pad,** packing Door Handles		4	
BD.25221	**OUTSIDE HANDLE (LOCKING) FOR R.H. FRONT DOOR (WB.1/11788)**		1	
8187	**Locking Barrel** (complete with Keys) (1/8018)		1	
8189	**Operating Lever** (1/8020)		1	
8184	**Push Button** (1/8015)		1	
11240	**Return Spring,** for Push Button (RS.41-432)		1	
8192	**Circlip,** retaining Mechanism (RS.84/3)		1	
UFS.119/7R	**Screw,** Set, securing Base Plate to Handle		2	
C.723/A	**Washer,** Shakeproof, on Setscrews		2	
BD.25220	**OUTSIDE HANDLE (LOCKING) FOR L.H. FRONT DOOR (WB.1/11787)**	50—5	1	
8186	**Locking Barrel** (complete with Keys) (1/8017)		1	
8188	**Operating Lever** (1/8019)		1	
	All other items are as for Handle BD.25221			
BD.18126	**Seating Washer,** at rear end of Front Outside Door Handles	50—6	2	
UFN.119/L	**Nut,** securing Outside Door Handles		4	
C.723/A	**Washer,** Shakeproof, under Nuts		4	
BD.25222	**DROP LINK, CONNECTING OUTSIDE DOOR HANDLES TO LOCKS (WB. 1/11777)**	50—7	2	
BD.25223	**Spring,** behind Drop Links (RS.41/507)		2	
BD.25224	**Washer** (Starlock) retaining Links		2	
BD.23473	**Clip,** retaining Links (WB.1/11517)	50—8	2	
AW.102/T	**Washer,** Plain, under Clips		2	

ALWAYS QUOTE COLOUR REQUIRED WHEN ORDERING TRIMMED PARTS

SECTION 46

BODY FITTINGS

Part No.	Description	Plate No.	No. per Unit	Remarks
BD.25233	**REMOTE CONTROL AND LINK ASSEMBLY, FOR OPERATION OF R.H. FRONT DOOR LOCK (WB.3/11904)**		1	
BD.25232	**REMOTE CONTROL AND LINK ASSEMBLY, FOR OPERATION OF L.H. FRONT DOOR LOCK (WB.3/11905)**	50—9	1	
DJZ.410/6C	**Screw**, Self-Tapping, securing Remote Controls to Front Doors		6	
BD.8633/2	**Spire Nut**, on Self-Tapping Screws		6	
BD.19575	**Wavy Washer**, at connection of Link to Lock		2	
BD.23473	**Spring Clip**, securing Link to Lock		2	
BD.19574	**Special Washer**, behind Spring Clips		2	
BD.29609	**Buffer** (Rubber) cushioning Control Link		4	
BD.25288	**SAFETY CATCH ASSEMBLY FOR R.H. FRONT DOOR (WB.3/17896)**		1	
BD.25287	**SAFETY CATCH ASSEMBLY FOR L.H. FRONT DOOR (WB.3/17897)**	50—10	1	
BD.26773	**Bearing Plate**, supporting Spindle	50—11	2	
BD.14399/4	**Screw**, Set, securing Safety Catches and Bearing Plates to Doors		4	
C.723/A	**Washer**, Shakeproof, on Setscrews		4	
AW.102/T	**Washer**, Plain, under Shakeproof Washers		4	
BD.24966	**Clip**, securing Safety Catch Link to Door Locks		2	
BD.4240	**BUTTON, OPERATING SAFETY CATCH ON R.H. FRONT DOOR (1/3298)**		1	
BD.4241	**BUTTON, OPERATING SAFETY CATCH ON L.H. FRONT DOOR (1/3299)**	50—12	1	
BD.4242	**Screw** (Countersunk Head) securing Buttons		2	
BD.4243	**Washer**, Shakeproof, on Screws		2	
BD.18296	**WINDOW REGULATOR ASSEMBLY IN R.H. FRONT DOOR (271/1102)**		1	
BD.18297	**WINDOW REGULATOR ASSEMBLY IN L.H. FRONT DOOR (271/1103)**	50—13	1	
UFS.425/2.5H	**Screw**, Set, securing Regulators (UMF.161/P.05)		16	
C.724	**Washer**, Shakeproof, on Setscrews		16	

ALWAYS QUOTE COLOUR REQUIRED WHEN ORDERING TRIMMED PARTS

Part No.	Description	Plate No.	No. per Unit	Remarks
BD.17581	**DEFLECTOR PLATE, PREVENTING INGRESS OF WATER TO WINDOW REGULATOR MECHANISM**	50—14	2	
BD.18189	**Sealing Strip** (Flintkote) for Deflector Plate		2	
BD.1814/2	**Pop Rivet,** securing Deflector Plate to Inner Door Panel		4	
BD.10729	**HANDLE, OPERATING FRONT DOOR WINDOW REGULATOR (WB.1/6671)**	50—15	2	
BD.10730	**OUTER ESCUTCHEON, FOR REGULATOR AND INSIDE DOOR HANDLES (W.128)**	50—16	4	
BD.10731	**INNER ESCUTCHEON FOR REGULATOR AND INSIDE DOOR HANDLES (W.129)**	50—17	4	
BD.10732	**SPRING BEHIND ESCUTCHEONS (41/379)**	50—18	4	
BD.10734	**Rubber Plug,** behind Handles		4	
BD.10733	**Peg,** securing Handles to Remote Controls and Regulators		4	
BD.24974	**FRAME, FOR WINDOW IN R.H. FRONT DOOR (COMPLETE WITH NO-DRAUGHT VENTILATOR)**		1	
BD.24973	**FRAME, FOR WINDOW IN L.H. FRONT DOOR (COMPLETE WITH NO-DRAUGHT VENTILATOR)**		1	
BD.24819	**FRAME ONLY, FOR WINDOW IN R.H. FRONT DOOR**		1	
BD.24818	**FRAME ONLY, FOR WINDOW IN L.H. FRONT DOOR**	50—19	1	
BD.8291/7	**Screw,** Set, securing Window Frames at bottom		4	
BD.541/20	**Special Washer,** on Setscrews		6	
C.724	**Washer,** Shakeproof, on Setscrews		4	
BD.19691/1	**Packing Washer,** at bottom fixings ($\frac{3}{16}$" thick)		As req'd	**SELECTIVE SIZES**
BD.19691/2	**Packing Washer,** at bottom fixings ($\frac{7}{16}$" thick)		As req'd	**SELECTIVE SIZES**
BD.19691/3	**Packing Washer,** at bottom fixings ($\frac{1}{16}$" thick)		As req'd	**SELECTIVE SIZES**
UFN.125/L	**Nut,** on Setscrews		2	
BD.14399/3	**Screw,** Set, Special, securing Window Frames to Doors at Waist		8	

ALWAYS QUOTE COLOUR REQUIRED WHEN ORDERING TRIMMED PARTS

SECTION 46

BODY FITTINGS

Part No.	Description	Plate No.	No. per Unit	Remarks
C.723/A	**Washer**, Shakeproof, on Setscrews		8	
AW.102/T	**Washer**, Plain, on Setscrews		8	
BD.20091/1	**Packing Washer** (.048" thick) on Setscrews		As req'd	} SELECTIVE SIZES
BD.20091/2	**Packing Washer** (.128" thick) on Setscrews		As req'd	}
BD.24846	**GLASS FOR WINDOWS IN FRONT DOORS**	50—20	2	
BD.17059	**REGULATOR CHANNEL FOR FRONT DOOR GLASS**	50—21	2	
BD.4714	**Everseal Strip**, in Regulator Channels		2	
BD.5195/2	**FELT IN TOP RAIL OF WINDOW FRAMES (19" LONG)**	50—22	2	
BD.21070/1	**SEAL IN FORWARD RAIL OF WINDOW FRAMES (30" LONG)**	50—23	2	
BD.21070/2	**SEAL IN REAR RAIL OF WINDOW FRAMES (31" LONG)**	50—24	2	
BD.16792	**SEAL (PRESTIK) BETWEEN NO-DRAUGHT VENTILATOR RAIL AND DOOR**	50—25	2	
BD.21073/3	**SEAL (NEOPRENE) BETWEEN TOP OF FRONT DOOR AND GLASS**	50—26	2	
BD.11605/1	**DRAUGHT PIPING FOR FRONT DOORS (65½" LONG)**		2	
BD.11605/2	**DRAUGHT PIPING AT FRONT OF 'B/C' POSTS (42½" LONG)**		2	

ALWAYS QUOTE COLOUR REQUIRED WHEN ORDERING TRIMMED PARTS

Part No.	Description	Plate No.	No. per Unit	Remarks
BD.18268	**SEALING RUBBER FOR R.H. FRONT DOOR HINGE PILLAR**		1	
BD.10666	**Retainer**, for Sealing Rubber		1	
BD.1814/2	**Pop Rivet**, securing Seal Retainers		6	
BD.18267	**SEALING RUBBER FOR L.H. FRONT DOOR HINGE PILLAR**	50—27	1	
BD.10665	**Retainer**, for Sealing Rubber		1	
BD.1814/2	**Pop Rivet**, securing Seal Retainers		6	
BD.21361	**SEALING RUBBER, ON HINGE FACE, AT WAIST LEVEL OF R.H. FRONT DOOR (11" LONG)**		1	
BD.21362	**SEALING RUBBER, ON HINGE FACE, AT WAIST LEVEL OF L.H. FRONT DOOR (11" LONG)**	50—28	1	
BD.19156	**SEALING RUBBER, FOR R.H. FRONT DOOR SHUT PILLAR**		1	
BD.19155	**SEALING RUBBER, FOR L.H. FRONT DOOR SHUT PILLAR**	50—29	1	
BD.17356	**FILLER PIECE, ON SHUT FACE PANEL, AT WAIST LEVEL OF R.H. FRONT DOOR**		1	
BD.17355	**FILLER PIECE, ON SHUT FACE PANEL, AT WAIST LEVEL OF L.H. FRONT DOOR**	50—30	1	
BD.17357	**Plywood Packing**, under Filler Pieces		2	
DA.604/12C	**Screw**, Self-Tapping, securing Filler Pieces		4	
BD.26835	**Rubber Plug**, between Window Frame and Shut Pillar of Front Doors		2	
BD.28005	**SEALING RUBBER FOR FRONT DOOR SILLS ($36\frac{7}{8}$" LONG)**	50—31	2	

ALWAYS QUOTE COLOUR REQUIRED WHEN ORDERING TRIMMED PARTS

SECTION 46

BODY FITTINGS

Part No.	Description	Plate No.	No. per Unit	Remarks
BD.24938	**NO-DRAUGHT VENTILATOR, COMPLETE, FOR L.H. FRONT DOOR**	50—32	1	
BD.17068	**Glass only**		1	
BD.1300	**Everseal,** between Glass and Frame (26" long)		1	
BD.17119	**Drip Channel,** at front corner of Ventilator		1	
BD.24957	**Locking Handle,** for No-Draught Ventilator	50—33	1	
BD.26195	**Rubber Washer,** behind Locking Handle	50—34	1	
BD.18073	**Peg,** securing Locking Handle to Bolt on Inner Frame	50—35	1	
BD.24959	**Plunger,** in Locking Handle	50—36	1	
BD.24960	**Spring,** under Plunger	50—37	1	
BD.24962	**Bolt,** securing Locking Handle to Inner Frame	50—38	1	
BD.25354	**Fibre Washer,** outer, on Bolt	50—39	1	
BD.27742	**Fibre Washer,** inner, on Bolt	50—40	1	
BD.24961	**Nut,** on Bolt	50—41	1	
BD.24939	**NO-DRAUGHT VENTILATOR, COMPLETE, FOR R.H. FRONT DOOR**		1	
BD.24958	**Locking Handle,** for No-Draught Ventilator		1	
BD.17120	**Drip Channel,** at front corner of Ventilator		1	
	All other items are as for BD.24938			
BD.17250	**UPPER PIVOT ARM FOR NO-DRAUGHT VENTILATOR IN R.H. FRONT DOOR**		1	
BD.17249	**UPPER PIVOT ARM FOR NO-DRAUGHT VENTILATOR IN L.H. FRONT DOOR**	50—42	1	
BD.17253	**Pin,** for Upper Pivots	50—43	2	
BD.26619/1	**Screw,** Set, securing Upper Pivot Arms to Window Frames		4	
BD.9647	**INDEX SLEEVE, FOR LOWER PIVOT SPINDLE, CONTROLLING OPENING ANGLE OF NO-DRAUGHT VENTILATORS**	50—44	2	
BD.26840	**Bush,** on Lower Pivot Spindle of L.H. Ventilator, engaging with Index Sleeve	50—45	1	
BD.26841	**Bush,** on Lower Pivot Spindle of R.H. Ventilator, engaging with Index Sleeve		1	
BD.9651	**Spring,** on Lower Pivot Spindles, below Index Sleeves	50—46	2	
BD.18067	**Pin,** tensioning Springs		2	
UFN.119/L	**Nut,** locking Springs and Index Sleeves to Lower Pivot Spindles		4	
AW.102/T	**Washer,** Plain, under Nuts		2	
BD.17049	**SEALING RUBBER FOR NO-DRAUGHT VENTILATOR IN R.H. FRONT DOOR**		1	

ALWAYS QUOTE COLOUR REQUIRED WHEN ORDERING TRIMMED PARTS

Part No.	Description	Plate No.	No. per Unit	Remarks
BD.17048	**SEALING RUBBER FOR NO-DRAUGHT VENTILATOR IN L.H. FRONT DOOR**	50—47	1	
BD.30901	**CASING ASSEMBLY FOR R.H. FRONT DOOR (COMPLETE WITH POCKET LID ASSEMBLY, BUT LESS ARMREST)**		1	
BD.26145	**Pocket Lid Assembly**		1	
BD.18068	**Clip,** securing Casing to Front Door		19	
BD.30902	**CASING ASSEMBLY FOR L.H. FRONT DOOR (COMPLETE WITH POCKET LID ASSEMBLY, BUT LESS ARMREST)**	50—48	1	
BD.26144	**Pocket Lid Assembly**		1	
BD.18068	**Clip,** securing Casing to Front Door		19	
DA.504/8C	**Screw,** Self-Tapping, securing Casings to top of Front Doors		8	
BD.26144	**POCKET LID ASSEMBLY ON L.H. FRONT DOOR CASING**	50—49	1	
BD.26128	**Pull,** on Pocket Lid	50—50	1	
BD.26308	**Dome Nut,** securing Pull to Pocket Lid		2	
AW.102/T	**Washer,** Plain, under Nut		2	
BD.17473	**Pocket Strap**	50—51	1	
BD.26667	**Hook,** on Pocket Strap	50—52	1	
BD.26651	**Guide,** on Pocket Strap	50—53	1	
MC.304/4R	**Woodscrew,** securing Guide to Pocket Lid		4	
BD.532/1	**Cup Washer,** on Woodscrews		4	
BD.26145	**POCKET LID ASSEMBLY ON R.H. FRONT DOOR CASING**		1	
	Individual items are as for BD.26144			
BD.26078	**ARMREST ASSEMBLY (TRIMMED) FOR L.H. FRONT DOOR**	50—54	1	
BD.26161	**Chrome Finisher,** in Hand Pull on Armrest	50—55	1	
DAC.604/8C	**Screw,** Self-Tapping, securing Finisher		2	
BD.22931	**Chrome Finisher,** in Screw Apertures in Armrest		2	
BD.26079	**ARMREST ASSEMBLY (TRIMMED) FOR R.H. FRONT DOOR**		1	
	Individual items are as for BD.26078			
DIZ.810/20C	**Screw,** Self-Tapping, securing Armrests		4	
AW.102/T	**Washer,** Plain, on Self-Tapping Screw		4	
C.723/A	**Washer,** Shakeproof, on Self-Tapping Screws		4	
BD.8633/2	**Spire Nut,** on Self-Tapping Screws		4	

ALWAYS QUOTE COLOUR REQUIRED WHEN ORDERING TRIMMED PARTS

SECTION 46

BODY FITTINGS

Part No.	Description	Plate No.	No. per Unit	Remarks
BD.26599	**PANEL ASSEMBLY MOUNTING ARM-REST ON R.H. FRONT DOOR**		1	
BD.26598	**PANEL ASSEMBLY MOUNTING ARM-REST ON L.H. FRONT DOOR**	50—57	1	
BD.1814/2	**Pop Rivet,** securing Armrest Mounting Panels to Doors		8	
BD.30399	**TRIM ROLL ASSEMBLY AT TOP OF R.H. FRONT DOOR**		1	
BD.30400	**TRIM ROLL ASSEMBLY AT TOP OF L.H. FRONT DOOR**	50—58	1	
M.104/4R	**Woodscrew,** securing Trim Rolls		6	
BD.30672	**Fillet** (Long) mounting Trim Rolls	50—59	2	
BD.30462	**Fillet** (Short) mounting Trim Roll on R.H. Front Door		1	
BD.30463	**Fillet** (Short) mounting Trim Roll on L.H. Front Door	50—60	1	
DA.506/20C	**Screw,** Self-Tapping, securing Fillets		8	
BD.17282/1	**WEATHERSTRIP, FOR FRONT DOOR GLASSES**	50—61	2	
BD.22884	**Clip,** securing Weatherstrip to Window Frames	50—62	8	
BD.25242	**LOCK ASSEMBLY IN R.H. REAR DOOR (WB.3/11902)**		1	
BD.25241	**LOCK ASSEMBLY IN L.H. REAR DOOR (WB.3/11903)**	51—1	1	
BD.25228	**DOVETAIL PLATE ON R.H. REAR DOOR SHUT FACE (WB.3/11611)**		1	
BD.25227	**DOVETAIL PLATE ON L.H. REAR DOOR SHUT FACE (WB.3/11612)**	51—2	1	
BD.16940/2	**Screw,** Set (Countersunk Head) securing Dovetail Plates		6	
BD.25230	**STRIKER ASSEMBLY FOR R.H. REAR DOOR LOCK (WB.3/11540)**		1	

ALWAYS QUOTE COLOUR REQUIRED WHEN ORDERING TRIMMED PARTS

Part No.	Description	Plate No.	No. per Unit	Remarks
BD.25229	**STRIKER ASSEMBLY FOR L.H. REAR DOOR LOCK (WB.3/11541)**	51—3	1	
BD.26803	**Shim,** behind Striker (.080" thick)		As req'd	**SELECTIVE SIZES**
BD.26804	**Shim,** behind Striker (.048" thick)		As req'd	
BD.21509/7	**Screw,** Set, securing Strikers to 'D' Posts		6	
BD.10728	**INSIDE HANDLE FOR REAR DOORS (WB.1/3859)**	51—4	2	
BD.24952/2	**Rubber Thrust Pad,** packing Door Handles		4	
BD.25239	**OUTSIDE HANDLE FOR R.H. REAR DOOR (WB.1/11790)**		1	
8190	**Push Button** (1/8027)		1	
11240	**Return Spring,** for Push Button (RS.41-432)		1	
8192	**Circlip,** retaining Push Button (RS.84-3)		1	
11241	**Washer,** under Circlip (RS.14-380)		1	
UFS.119/7R	**Screw,** Set, securing Base Plate to Handle		2	
C.723/A	**Washer,** Shakeproof, on Setscrews		2	
BD.25238	**OUTSIDE HANDLE FOR L.H. REAR DOOR (WB.1/11789)**	51—5	1	
	Individual items are as for Handle BD.25239			
BD.18126	**Seating Washer,** at rear end of Rear Outside Door Handles	51—6	2	
UFN.119/L	**Nut,** securing outside Door Handles		4	
C.723/A	**Washer,** Shakeproof, under Nuts		4	
BD.25240	**DROP LINK, CONNECTING OUTSIDE REAR DOOR HANDLES TO LOCKS (WB.1/11778)**	51—7	2	
BD.25224	**Washer** (Starlock) retaining Links		2	
BD.23473	**Clip,** retaining Links (1/11517)	51—8	2	
AW.102/T	**Washer,** Plain, under Clips		2	
BD.25244	**REMOTE CONTROL AND LINK ASSEMBLY FOR OPERATION OF R.H. REAR DOOR LOCK (WB.3/11906)**		1	

ALWAYS QUOTE COLOUR REQUIRED WHEN ORDERING TRIMMED PARTS

SECTION 46

BODY FITTINGS

Part No.	Description	Plate No.	No. per Unit	Remarks
BD.25243	**REMOTE CONTROL AND LINK ASSEMBLY FOR OPERATION OF L.H. REAR DOOR LOCK (WB.3/11097)**	51—9	1	
DJZ.410/6C	**Screw,** Self-Tapping, securing Remote Controls to Rear Doors		6	
BD.8633/2	**Spire Nut,** on Self-Tapping Screws		6	
BD.19575	**Wavy Washer,** at connection of Link to Lock		2	
BD.23473	**Spring Clip,** securing Link to Lock (1/11517)		2	
BD.19574	**Special Washer,** behind Spring Clips		2	
BD.29609	**Buffer,** on Door Panel, preventing vibration of Remote Controls		4	
BD.25290	**SAFETY CATCH ASSEMBLY FOR R.H. REAR DOOR (WB.3/17898)**		1	
BD.25289	**SAFETY CATCH ASSEMBLY FOR L.H. REAR DOOR (WB.3/17899)**	51—10	1	
BD.26773	**Bearing Plate,** supporting Spindle	51—11	2	
BD.14399/4	**Screw,** Set, securing Safety Catches and Bearing Plates to Door Frames		4	
C.723/A	**Washer,** Shakeproof, on Screws		4	
AW.102/T	**Washer,** Plain, under Shakeproof Washers		4	
BD.24966	**Clip,** securing Safety Catch Link to Door Locks		2	
BD.4240	**BUTTON OPERATING SAFETY CATCH ON R.H. REAR DOOR**		1	
BD.4241	**BUTTON OPERATING SAFETY CATCH ON L.H. REAR DOOR**	51—12	1	
BD.4242	**Screw** (Countersunk Head) securing Buttons		2	
BD.4243	**Washer,** Shakeproof, on Screws		2	
BD.18298	**WINDOW REGULATOR ASSEMBLY IN R.H. REAR DOOR (271/1112)**		1	
BD.18299	**WINDOW REGULATOR ASSEMBLY IN L.H. REAR DOOR (271/1113)**	51—13	1	
UFS.425/2.5H	**Screw,** Set, securing Regulator (UMF.161/P.05)		12	
C.724	**Washer,** Shakeproof, on Setscrews		12	
BD.10729	**HANDLE, OPERATING REAR DOOR WINDOW REGULATOR (WB.1/6671)**	51—14	2	

ALWAYS QUOTE COLOUR REQUIRED WHEN ORDERING TRIMMED PARTS

Part No.	Description	Plate No.	No. per Unit	Remarks
BD.10730	**OUTER ESCUTCHEON FOR REGULATOR HANDLES AND INSIDE DOOR HANDLES (W.128)**	51—15	4	
BD.10731	**INNER ESCUTCHEON FOR REGULATOR HANDLES AND INSIDE DOOR HANDLES (W.129)**	51—16	4	
BD.10732	**SPRING BEHIND ESCUTCHEONS (41/379)**	51—17	4	
BD.10734	**Rubber Plug,** behind Handles		4	
BD.10733	**Peg,** securing Handles to Locks and Regulators		4	
BD.24976	**FRAME, FOR WINDOW IN R.H. REAR DOOR (COMPLETE WITH NO-DRAUGHT VENTILATOR)**		1	
BD.24975	**FRAME, FOR WINDOW IN L.H. REAR DOOR (COMPLETE WITH NO-DRAUGHT VENTILATOR)**		1	
BD.24842	**FRAME ONLY, FOR WINDOW IN R.H. REAR DOOR**		1	
BD.24841	**FRAME ONLY, FOR WINDOW IN L.H. REAR DOOR**	51—18	1	
UFS.125/7R	**Screw,** Set, securing Frames to Doors at bottom front fixing		2	
BD.27756/2	**Screw,** Set, securing Frames to Doors at bottom rear fixing		2	
UFN.125/L	**Nut,** on Setscrews		4	
C.724	**Washer,** Shakeproof, under Nuts		4	
BD.541/20	**Washer,** Plain, under Shakeproof Washers		4	
BD.19691/1	**Packing Washer,** at bottom fixings ($\frac{3}{16}$" thick)		As req'd	**SELECTIVE SIZES**
BD.19691/2	**Packing Washer,** at bottom fixings ($\frac{7}{16}$" thick)		As req'd	**SELECTIVE SIZES**
BD.19691/3	**Packing Washer,** at bottom fixings ($\frac{1}{16}$" thick)		As req'd	**SELECTIVE SIZES**
BD.14399/3	**Screw,** Set, securing Frames to Doors at top		8	
C.723/A	**Washer,** Shakeproof, on Setscrews		8	
AW.102/T	**Washer,** Plain, under Shakeproof Washers		8	
BD.20091/1	**Packing Washer,** at top fixings (.048" thick)		As req'd	**SELECTIVE SIZES**
BD.20091/2	**Packing Washer,** at top fixings (.128" thick)		As req'd	**SELECTIVE SIZES**
BD.24847	**GLASS FOR WINDOW IN REAR DOORS**	51—19	2	

ALWAYS QUOTE COLOUR REQUIRED WHEN ORDERING TRIMMED PARTS

SECTION 46

BODY FITTINGS

Part No.	Description	Plate No.	No. per Unit	Remarks
BD.17061	**REGULATOR CHANNEL FOR R.H. REAR DOOR GLASS**		1	
BD.17060	**REGULATOR CHANNEL FOR L.H. REAR DOOR GLASS**	51—20	1	
BD.4714	**Everseal Strip,** in Regulator Channels		2	
BD.5195/2	**FELT IN TOP RAIL OF WINDOW FRAMES (19" LONG)**	51—21	2	
BD.21070/4	**SEAL IN FORWARD AND REAR RAILS OF WINDOW FRAMES (27½" LONG)**	51—22	4	
BD.16792	**SEAL (PRESTIK) BETWEEN NO-DRAUGHT VENTILATOR RAIL AND REAR DOOR**	51—23	2	
BD.21073/3	**SEAL (NEOPRENE) BETWEEN TOP OF FRONT DOORS AND GLASS**	51—24	2	
BD.11605/2	**DRAUGHT PIPING AT REAR OF "B/C" POSTS (42½" LONG)**		2	
BD.11605/3	**DRAUGHT PIPING AT REAR DOORS (70½" LONG)**		2	
BD.18265	**SEALING RUBBER FOR R.H. REAR DOOR HINGE PILLAR**		1	
BD.10664	**Retainer,** for Seal on R.H. Rear Door Hinge Pillar		1	
BD.1814/2	**Pop Rivet,** securing Seal Retainer		6	
BD.18266	**SEALING RUBBER FOR L.H. REAR DOOR HINGE PILLAR**	51—25	1	
BD.10663	**Retainer,** for Seal on R.H. Rear Door Hinge Pillar		1	
BD.1814/2	**Pop Rivet,** securing Seal Retainer		6	
BD.18270	**SEALING RUBBER FOR R.H. REAR DOOR SHUT PILLAR**		1	

ALWAYS QUOTE COLOUR REQUIRED WHEN ORDERING TRIMMED PARTS

Part No.	Description	Plate No.	No. per Unit	Remarks
BD.18269	**SEALING RUBBER FOR L.H. REAR DOOR SHUT PILLAR**	51—26	1	
BD.26836	**Rubber Pad,** sealing Window Frame to Hinge Pillar of Rear Doors		2	
BD.17363	**FILLER PIECE, ON SHUT FACE PANEL AT WAIST LEVEL OF R.H. REAR DOOR**		1	
BD.17362	**FILLER PIECE, ON SHUT FACE PANEL, AT WAIST LEVEL OF L.H. REAR DOOR**	51—27	1	
BD.17364	**Packing,** under Filler Pieces		2	
DA.604/12C	**Screw,** Self-Tapping, securing Filler Pieces		4	
BD.28006	**SEALING RUBBER FOR REAR DOOR SILLS (24" LONG)**	51—28	2	
BD.18273/1	**SEALING RUBBER FOR REAR DOORS AT WHEEL ARCHES (18" LONG)**	51—29	2	
BD.17133	**NO-DRAUGHT VENTILATOR, COMPLETE, FOR R.H. REAR DOOR**		1	
BD.17089	**Glass only,** for No-Draught Ventilator		1	
BD.1300	**Everseal,** between Glass and Frame (32" Long)		1	
BD.17380/5	**Everseal,** between Glass and Frame (13" Long)		1	
BD.17132	**NO-DRAUGHT VENTILATOR, COMPLETE, FOR L.H. REAR DOOR**	51—30	1	
	Individual items are as for BD.17133			
BD.17054	**HINGE PLATE FOR NO-DRAUGHT VENTILATOR IN REAR DOORS**		2	
BD.4899/1	**Screw,** Set, securing Hinge Plates		10	
BD.17302	**ANGLE BRACKET, ON R.H. REAR DOOR LIGHT FRAME, FOR CATCH OPERATING NO-DRAUGHT VENTILATOR**		1	

ALWAYS QUOTE COLOUR REQUIRED WHEN ORDERING TRIMMED PARTS

SECTION 46

BODY FITTINGS

Part No.	Description	Plate No.	No. per Unit	Remarks
BD.17301	**ANGLE BRACKET, ON L.H. REAR DOOR LIGHT FRAME, FOR CATCH OPERATING NO-DRAUGHT VENTILATOR**	51—31	1	
UCS.316/4H	**Screw,** Set, securing Angle Brackets to Frame		4	
C.722	**Washer,** Shakeproof, on Setscrews		4	
AW.102/T	**Washer,** Plain, under Shakeproof Washers		4	
BD.20086	**CATCH OPERATING NO-DRAUGHT VENTILATOR ON L.H. REAR DOOR**	51—32	1	
7758	**Operating Arm**		1	
841	**Shouldered Bolt,** securing Operating Arm on Catch to Bracket on No-Draught Ventilator Frame (BSK.318)	51—33	1	
C.3563/1	**Nut,** on Shouldered Bolt	51—34	1	
10447	**Shouldered Bolt,** securing Arm and Catch Plate to Body (61/682/312/8)		1	
10448	**Plain Washer** ($\frac{3}{16}$") on Shouldered Bolt (61/682/312/12)		1	
10449	**Thackery Washer** ($\frac{3}{16}$") under Plain Washer (61/682/312/11)		1	
BD.20087	**CATCH OPERATING NO-DRAUGHT VENTILATOR IN R.H. REAR DOOR**		1	
7759	**Operating Arm**		1	
	All other items are as for Catch BD.20086			
BD.17305	**Base,** for Catch on L.H. Rear Door	51—35	1	
BD.17306	**Base,** for Catch on R.H. Rear Door		1	
BD.5454/3	**Screw,** Set, securing Catch and Base to Angle Bracket		4	
C.3563	**Fibre Washer,** under head of Shouldered Bolt	51—36	2	
C.3563	**Fibre Washer,** between Operating Arm and Bracket on No-Draught Ventilator Frame	51—36	2	
BD.17073	**SEALING RUBBER FOR R.H. REAR NO-DRAUGHT VENTILATOR**		1	
BD.17072	**SEALING RUBBER FOR L.H. REAR NO-DRAUGHT VENTILATOR**	51—37	1	

ALWAYS QUOTE COLOUR REQUIRED WHEN ORDERING TRIMMED PARTS

Part No.	Description	Plate No.	No. per Unit	Remarks
BD.31302	**CASING ASSEMBLY FOR L.H. REAR DOOR (COMPLETE WITH ARM REST AND DOOR POCKET ASSEMBLY)**		1	
BD.30904	**Casing only** (less Armrest and Door Pocket Assembly)	51—33	1	
BD.18068	**Clip,** securing Casing to Rear Door		17	
BD.26147	**Armrest and Door Pocket Assembly** (Trimmed)	51—39	1	
DAZ.408/12C	**Screw,** Self-Tapping, securing Armrest and Door Pocket Assembly to Casing		1	
DAZ.408/8C	**Screw,** Self-Tapping, securing Armrest and Door Pocket Assembly to Casing		5	
BD.541/13	**Washer,** Plain, on Self-Tapping Screws		3	
M.106/6R	**Woodscrew,** securing Armrest and Door Pocket Assembly to Casing		7	
BD.31303	**CASING ASSEMBLY FOR R.H. REAR DOOR (COMPLETE WITH ARM REST AND DOOR POCKET ASSEMBLY)**		1	
BD.30903	**Casing only** (less Armrest and Door Pocket Assembly)		1	
BD.26148	**Armrest and Door Pocket Assembly** (Trimmed)		1	
	All other items are as for BD.31302			
DA.504/8C	**Screw,** Self-Tapping, securing Casing to top of Rear Doors		8	
BD.26147	**ARMREST AND DOOR POCKET ASSEMBLY (TRIMMED) ON L.H. REAR DOOR CASING**	51—39	1	
BD.17641	**Ash Tray,** in Armrest (7/4008)	51—40	1	
DA.506/12C	**Screw,** Self-Tapping, securing Ash Tray		2	
BD.26148	**ARMREST AND DOOR POCKET ASSEMBLY ON R.H. REAR DOOR CASING**		1	
	Individual items are as for BD.26147			
BD.30402	**TRIM ROLL ASSEMBLY AT TOP OF L.H. REAR DOOR**	51—41	1	
BD.30401	**TRIM ROLL ASSEMBLY AT TOP OF R.H. REAR DOOR**		1	
M.104/4R	**Woodscrew,** securing Trim Rolls		6	
BD.30912	**Finisher,** at rear of Trim Rolls	51—42	2	
BD.30673	**Fillet** (Long) mounting Trim Rolls	51—43	2	
BD.30467	**Fillet** (Short) mounting Trim Roll on L.H. Rear Door	51—44	1	
BD.30466	**Fillet** (Short) mounting Trim Roll on R.H. Rear Door		1	
DA.506/20C	**Screw,** Self-Tapping, securing Fillets		8	
BD.17282/1	**WEATHERSTRIP FOR REAR DOOR GLASSES**	51—45	2	
BD.22884	**Clip,** securing Weatherstrip to Window Frames	51—46	8	

ALWAYS QUOTE COLOUR REQUIRED WHEN ORDERING TRIMMED PARTS

SECTION 46

BODY FITTINGS

Part No.	Description	Plate No.	No. per Unit	Remarks
BD.17129	**CHROME FINISHER AT FRONT OF R.H. DRIP MOULDING**	52—1	1	
BD.17128	**CHROME FINISHER AT FRONT OF L.H. DRIP MOULDING**	52—2	1	
BD.17127	**CHROME FINISHER AT REAR OF R.H. DRIP MOULDING**	52—3	1	
BD.17126	**CHROME FINISHER AT REAR OF L.H. DRIP MOULDING**	52—4	1	
BD.17139	**JOINT PIECE AT CENTRE OF FINISHERS**	52—5	2	
DAC.504/6C	**Screw,** Self-Tapping, securing Joint Pieces		2	
BD.29644	**JAGUAR MOTIF ABOVE RADIATOR GRILLE**	52—6	1	
UCN.119/L	**Nut,** securing Motif to Body		2	
C.723/A	**Washer,** Shakeproof, under Nuts		2	
BD.12370	**Washer,** Special, at fixing of Motif		2	
BD.29675	**CHROME BEAD ABOVE RADIATOR GRILLE**	52—7	1	**NOT REQUIRED WHEN JAGUAR MOTIF IS FITTED**
UCN.119/L	**Nut,** securing Chrome Bead		2	
C.723/A	**Washer,** Shakeproof, under Nuts		2	
BD.12370	**Washer,** Special, at fixing of Bead		2	
BD.29649	**CHROME BEAD ASSEMBLY FOR BONNET TOP**	52—8	1	
BD.4919/13	**Screw,** Special, securing Chrome Bead to Bonnet	52—9	10	
UCN.116/L	**Nut,** on Special Screws		9	
C.722	**Washer,** Shakeproof, under Nuts		9	
AW.102/T	**Washer,** Plain, under Shakeproof Washers		9	
C.8667/19	**Nut,** Self-Locking, on Special Screw		1	
BD.30270	**CHROME BEAD AT R.H. SIDE OF SCUTTLE PANEL**	52—10	1	

ALWAYS QUOTE COLOUR REQUIRED WHEN ORDERING TRIMMED PARTS

Part No.	Description	Plate No.	No. per Unit	Remarks
BD.30271	**CHROME BEAD AT L.H. SIDE OF SCUTTLE PANEL**	52—11	1	
BD.25644	**Friction Bush,** securing Beads to Scuttle Panels	52—12	4	
BD.17088	**CHROME BEAD FOR R.H. FRONT DOOR**	52—13	1	
BD.17087	**CHROME BEAD FOR L.H. FRONT DOOR**	52—14	1	
BD.26706/1	**Retainer and Rivet,** securing Beads to Front Doors	52—15	10	
BD.9848	**Stud,** securing Beads at front end	52—16	2	
UCN.116/L	**Nut,** on Studs		2	
C.722	**Washer,** Shakeproof, under Nuts		2	
BD.25221	**OUTSIDE HANDLE FOR R.H. FRONT DOOR**	52—17	1	
BD.25220	**OUTSIDE HANDLE FOR L.H. FRONT DOOR**	52—18	1	
BD.9846	**CHROME BEAD ON "B/C" POSTS**	52—19	2	
UFN.119/L	**Nut,** securing Beads		2	
C.723/A	**Washer,** Shakeproof, under Nuts		2	
AW.102/T	**Washer,** Plain, under Shakeproof Washers		2	
BD.17086	**CHROME BEAD FOR REAR DOORS**	52—20	2	
BD.26706/1	**Retainer and Rivet,** securing Beads to Rear Doors	52—21	10	
BD.11719	**Clip,** securing Beads at front end	52—22	2	
BD.1814/1	**Pop Rivet,** securing Clips		2	
BD.25239	**OUTSIDE HANDLE FOR R.H. REAR DOOR**	52—23	1	
BD.25238	**OUTSIDE HANDLE FOR L.H. REAR DOOR**	52—24	1	
BD.25578	**CHROME BEAD AT R.H. SIDE OF TONNEAU**	52—25	1	

ALWAYS QUOTE COLOUR REQUIRED WHEN ORDERING TRIMMED PARTS

SECTION 46

BODY FITTINGS

Part No.	Description	Plate No.	No. per Unit	Remarks
BD.25577	**CHROME BEAD AT L.H. SIDE OF TONNEAU**	52—26	1	
BD.25644	**Friction Bush,** securing Beads	52—27	4	
BD.25963	**CHROME BEAD AT TOP OF R.H. FRONT DOOR**	52—28	1	
BD.25962	**CHROME BEAD AT TOP OF L.H. FRONT DOOR**	52—29	1	
DAJ.204/6C	**Screw,** Self-Tapping, securing Beads		8	
DAZ.406/6C	**Screw,** Self-Tapping, securing Beads		2	
2179	**Rubber Buffer,** on inside of Beads		2	
BD.25533	**CHROME FINISHER ON "B/C" POSTS**	52—30	2	
DAC.504/6C	**Screw,** Self-Tapping, securing Finishers		8	
BD.25965	**CHROME BEAD AT TOP OF R.H. REAR DOOR**	52—31	1	
BD.25964	**CHROME BEAD AT TOP OF L.H. REAR DOOR**	52—32	1	
DAZ.406/6C	**Screw,** Self-Tapping, securing Beads		2	
BD.26706/4	**Retainer and Rivet,** securing Beads	52—33	8	
	CARPETS			
BD.26415	**Carpet,** for R.H. Front Floor	53—1	1	**R.H. DRIVE CARS ONLY**
BD.26414	**Carpet,** for L.H. Front Floor	53—2	1	
BD.30580	**Carpet,** for Dipper Pad	53—3	1	
BD.26413	**Carpet,** for R.H. Front Floor	53—4	1	**L.H. DRIVE CARS ONLY**
BD.26412	**Carpet,** for L.H. Front Floor	53—5	1	
BD.27978	**Carpet,** for R.H. Side of Gearbox	53—6	1	
BD.27979	**Carpet,** for L.H. Side of Gearbox	53—7	1	
BD.18670	**Carpet,** for centre of Cross Member under Front Seats	53—8	1	
BD.18669	**Carpet,** for sides of Cross Member under Front Seats	53—9	2	
BD.18668	**Carpet,** for R.H. Door Sill	53—10	1	
BD.18667	**Carpet,** for L.H. Door Sill	53—11	1	
BD.18666	**Carpet,** for Propeller Shaft Tunnel	53—12	1	
BD.26422	**Carpet,** for R.H. Rear Floor	53—13	1	
BD.26421	**Carpet,** for L.H. Rear Floor	53—14	1	
BD.18672	**Carpet,** for R.H. Rear Seat Valance	53—15	1	
BD.18671	**Carpet,** for L.H. Rear Seat Valance	53—16	1	
BD.28927	**Stud,** securing Carpets (78/404)	53—17	20	
BD.22665	**Socket,** receiving Studs	53—18	20	

ALWAYS QUOTE COLOUR REQUIRED WHEN ORDERING TRIMMED PARTS

Part No.	Description	Plate No.	No. per Unit	Remarks
	FELT UNDER CARPETS			
BD.26373	**Felt,** under R.H. Front Floor Carpet		1	NOT REQUIRED FOR CARS EQUIPPED WITH AUTOMATIC TRANSMISSION
BD.26374	**Felt,** under L.H. Front Floor Carpet		1	
BD.26377	**Felt,** under Rear Floor Tunnel Carpet		1	
BD.26379	**Felt,** under R.H. Cross Member Carpet		1	
BD.26378	**Felt,** under L.H. Cross Member Carpet		1	
BD.17828	**Felt,** under R.H. Front Door Sill Carpet		1	
BD.17827	**Felt,** under L.H. Front Door Sill Carpet		1	
BD.17830	**Felt,** under R.H. Rear Door Sill Carpet		1	
BD.17829	**Felt,** under L.H. Rear Door Sill Carpet		1	
BD.26375	**Felt,** under R.H. Rear Floor Carpet		1	
BD.26376	**Felt,** under L.H. Rear Floor Carpet		1	
BD.12822	**Felt,** for Front of Rear Seat		1	
	INSULATING FELTS			
BD.26381	**Hardura Felt,** for R.H. Toe Board		1	R.H. DRIVE CARS ONLY
BD.26380	**Hardura Felt,** for L.H. Toe Board		1	
BD.26383	**Hardura Felt,** for R.H. Toe Board		1	L.H. DRIVE CARS ONLY
BD.26382	**Hardura Felt,** for L.H. Toe Board		1	
BD.17884	**Hardura Felt,** for R.H. side of Screen Rail		1	
BD.17883	**Hardura Felt,** for L.H. side of Screen Rail		1	
BD.26385	**Hardura Felt,** under R.H. side of Scuttle		1	R.H. DRIVE CARS ONLY
BD.26384	**Hardura Felt,** under L.H. side of Scuttle		1	
BD.26387	**Hardura Felt,** under R.H. side of Scuttle		1	L.H. DRIVE CARS ONLT
BD.26386	**Hardura Felt,** under L.H. side of Scuttle		1	
BD.26388	**Hardura Felt,** for Rear Tunnel		1	
BD.26389	**Hardura Felt,** for Heater Box (Centre Upper)		1	
BD.26390	**Hardura Felt,** for Heater Box (Centre Upper)		1	
BD.26391	**Hardura Felt,** for Heater Box (Side)		1	
BD.26392	**Hardura Felt,** for Heater Box (Face)		1	
BD.26394	**Hardura Felt,** for R.H. face of Cubby Box		1	
BD.26393	**Hardura Felt,** for L.H. face of Cubby Box		1	
BD.26396	**Hardura Felt,** for centre of Instrument Board, R.H.		1	
BD.26395	**Hardura Felt,** for centre of Instrument Board, L.H.		1	
BD.17874	**Hardura Felt,** for top of R.H. Dash Panel		1	
BD.17873	**Hardura Felt,** for top of L.H. Dash Panel		1	
BD.26397/1	**Hardura Felt,** for Steering Column Bracket		2	
BD.26585	**Hardura Felt,** for top of Gearbox		1	NOT REQUIRED FOR CARS EQUIPPED WITH AUTOMATIC TRANSMISSION
BD.26587	**Hardura Felt,** for R.H. side of Gearbox		1	
BD.26586	**Hardura Felt,** for L.H. side of Gearbox		1	
BD.26589	**Hardura Felt,** for Gearbox Collar, R.H.		1	
BD.26588	**Hardura Felt,** for Gearbox Collar, L.H.		1	
BD.26401	**Hardura Felt,** for Bell Housing Collar, R.H.		1	
BD.26400	**Hardura Felt,** for Bell Housing Collar, L.H.		1	
BD.13213	**Hardura Felt,** for Dipstick side of Gearbox		1	
BD.26456	**Hardura Felt,** for Heater Motor Mounting Cover		1	
BD.26458	**Hardura Felt,** for Heater Casing Cover		1	
BD.25067	**Hardura Felt,** for Heater Casing Cover, Rear		1	
BD.13230	**Rubberised Felt,** for R.H. Toe Board		1	R.H. DRIVE CARS ONLY
BD.13229	**Rubberised Felt,** for L.H. Toe Board		1	
BD.17834	**Rubberised Felt,** for R.H. Toe Board		1	L.H. DRIVE CARS ONLY
BD.26402	**Rubberised Felt,** for L.H. Toe Board		1	
BD.26404	**Rubberised Felt,** for R.H. outer face of Cubby Box		1	
BD.26403	**Rubberised Felt,** for L.H. outer face of Cubby Box		1	
BD.26406	**Rubberised Felt,** for R.H. inner face of Cubby Box		1	
BD.26405	**Rubberised Felt,** for L.H. inner face of Cubby Box		1	
BD.26407	**Rubberised Felt,** for upper face of centre Instrument Board		1	
BD.26582	**Rubberised Felt,** for Scuttle sides		2	
BD.17858	**Rubberised Felt,** for top of R.H. Dash Panel		1	
BD.17859	**Rubberised Felt,** for top of L.H. Dash Panel		1	

ALWAYS QUOTE COLOUR REQUIRED WHEN ORDERING TRIMMED PARTS

SECTION 46

BODY FITTINGS

Part No.	Description	Plate No.	No. per Unit	Remarks
	INSULATING FELTS (Cont'd)			
BD.26577	**Rubberised Felt,** for top of Gearbox		1	NOT REQUIRED FOR CARS EQUIPPED WITH AUTOMATIC TRANSMISSION
BD.26579	**Rubberised Felt,** for R.H. side of Gearbox		1	
BD.26578	**Rubberised Felt,** for L.H. side of Gearbox		1	
BD.26581	**Rubberised Felt,** for R.H. side of Gearbox Collar		1	
BD.26580	**Rubberised Felt,** for L.H. side of Gearbox Collar		1	
BD.13232	**Rubberised Felt,** for Dipstick side of Gearbox		1	
BD.26947	**Rubberised Felt,** for L.H. side of Tunnel		1	
BD.26411	**Rubberised Felt,** for R.H. side of Gearbox, Front		1	
BD.26410	**Rubberised Felt,** for L.H. side of Gearbox, Front		1	
BD.13247	**Rubberised Felt,** under Toe Board Felts		2	
BD.13248	**Rubberised Felt,** under Toe Board Felt		1	
BD.13249	**Rubberised Felt,** under Toe Board Felt		1	
BD.26556	**Rubberised Felt,** for Front and Rear Door Glass Stop		4	
BD.26425	**Rubberised Felt,** for Boot Floor, Front		2	NOT REQUIRED WHEN AIR CONDITIONING IS FITTED
BD.26426	**Rubberised Felt,** for Boot Bulkhead		1	
BD.26427	**Rubberised Felt,** for Boot, under Parcel Shelf		1	
	HARDURA MATS			
BD.26466	**Mat Assembly,** for Boot Floor		1	NOT REQUIRED WHEN AIR CONDITIONING IS FITTED
BD.26469	**Mat Assembly,** Rear, for R.H. side of Boot		1	
BD.26468	**Mat Assembly,** Rear, for L.H. side of Boot		1	
BD.26473	**Mat Assembly,** Front, for R.H. side of Boot		1	
BD.26472	**Mat Assembly,** Front, for L.H. side of Boot		1	
BD.26484	**Mat Assembly,** for R.H. side of Boot Lid		1	
BD.26483	**Mat Assembly,** for L.H. side of Boot Lid		1	
BD.26485	**Mat Assembly,** for centre of Boot Lid		1	
BD.26476	**Mat Assembly,** for Bulkhead		1	
BD.28927	**Stud,** securing Boot Floor Mat Assembly		2	
BD.22665	**Socket,** receiving Studs		2	
BD.1286	**DURABLE DOT FASTENER SECURING BOOT FLOOR MAT ASSEMBLY**		5	
BD.1286/1	**Button only**		5	
BD.1286/2	**Socket only**		5	
BD.1286/3	**Stud only**		5	
BD.1814/2	**Rivet,** securing Fasteners to Floor		5	
	INTERIOR TRIMMING			
BD.26486	**Facing** (Vynide) for Front Seat Brackets (10 "x 3")		4	
BD.18040	**Facing** (Vynide) for Front of Rear Seat Pan (74" x 8")		1	
BD.18042	**Facing** (Vynide) for R.H. side of Rear Seat (29½" x 5½")		1	
BD.18041	**Facing** (Vynide) for L.H. side of Rear Seat (29½" x 5½")		1	
BD.14737	**Facing** (Vynide) for Cross Member Centre (19" x 12")		2	
BD.26488	**Facing** (Vynide) for Heater Duct, R.H. (13½" x 4")		1	
BD.26487	**Facing** (Vynide) for Heater Duct, L.H. (13½" x 4")		1	
BD.18043	**Facing** (Vynide) for Trim Board, Dash Side (12½" x 8")		2	
BD.18170	**Pad** (Polyurethane) for Trim Board		2	
BD.26489	**Patch** (Vynide) for Front Door, Top Front (8" x 4")		2	
BD.26490	**Patch** (Vynide) for Front Door, Top Rear (12" x 6")		2	
BD.26491	**Patch** (Vynide) for Front Door, Lower Rear (3½" x 2½")		2	
BD.26492	**Patch** (Vynide) for Front Door Pocket (30" x 12")		2	
BD.26493	**Patch** (Vynide) for Rear Door, Front (3" x 3")		2	
BD.26494	**Patch** (Vynide) for Rear Door, Centre (7" x 4")		2	
BD.26495	**Patch** (Vynide) for Rear Door, Rear (11" x 6")		2	
BD.26496	**Strip** (Vynide) for Instrument Panel Cross Rail (54" x 1½")		1	
BD.26497	**Facing** (Moquette) for Steering Column Bracket (10"x 6")		1	

ALWAYS QUOTE COLOUR REQUIRED WHEN ORDERING TRIMMED PARTS

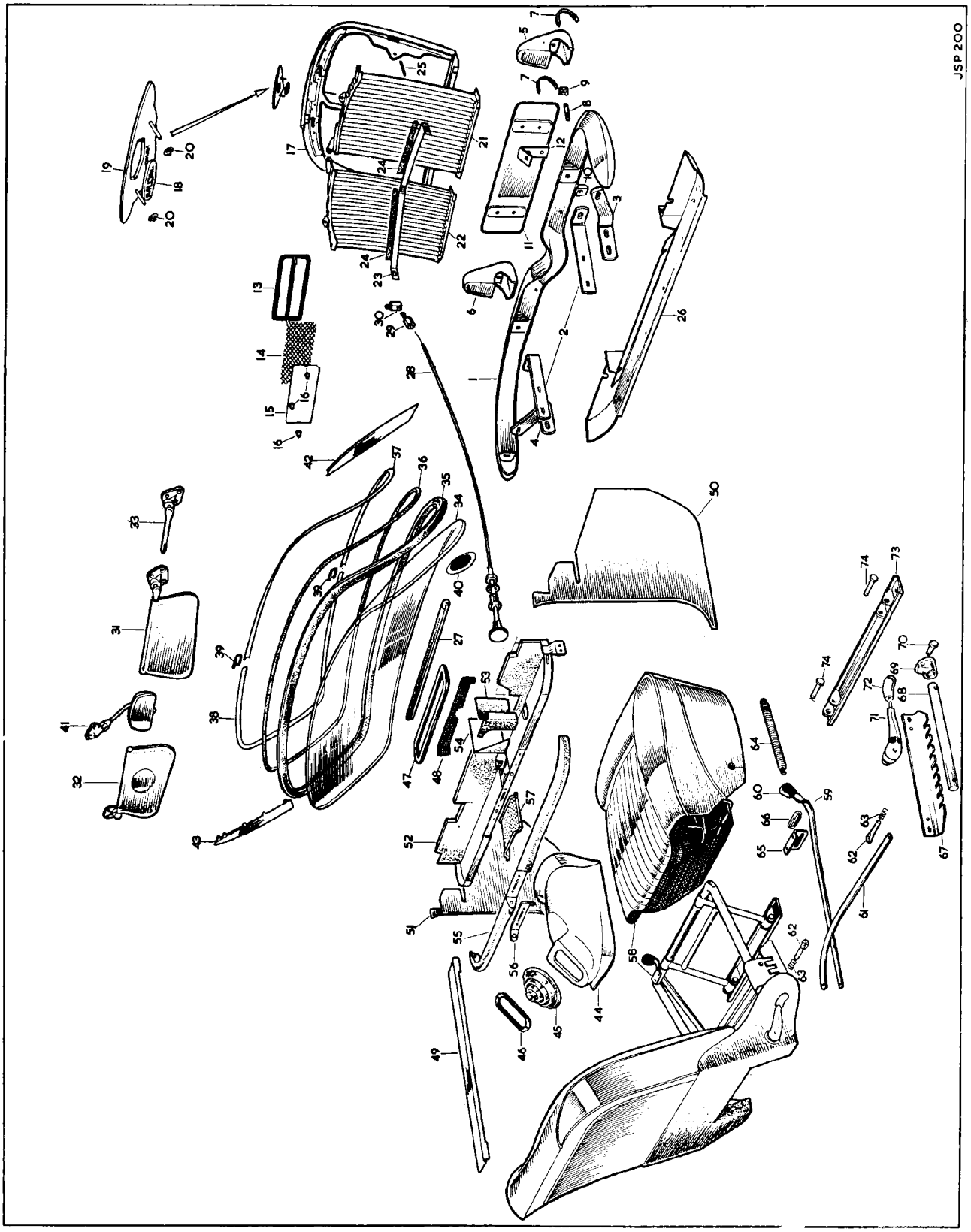

PLATE 47

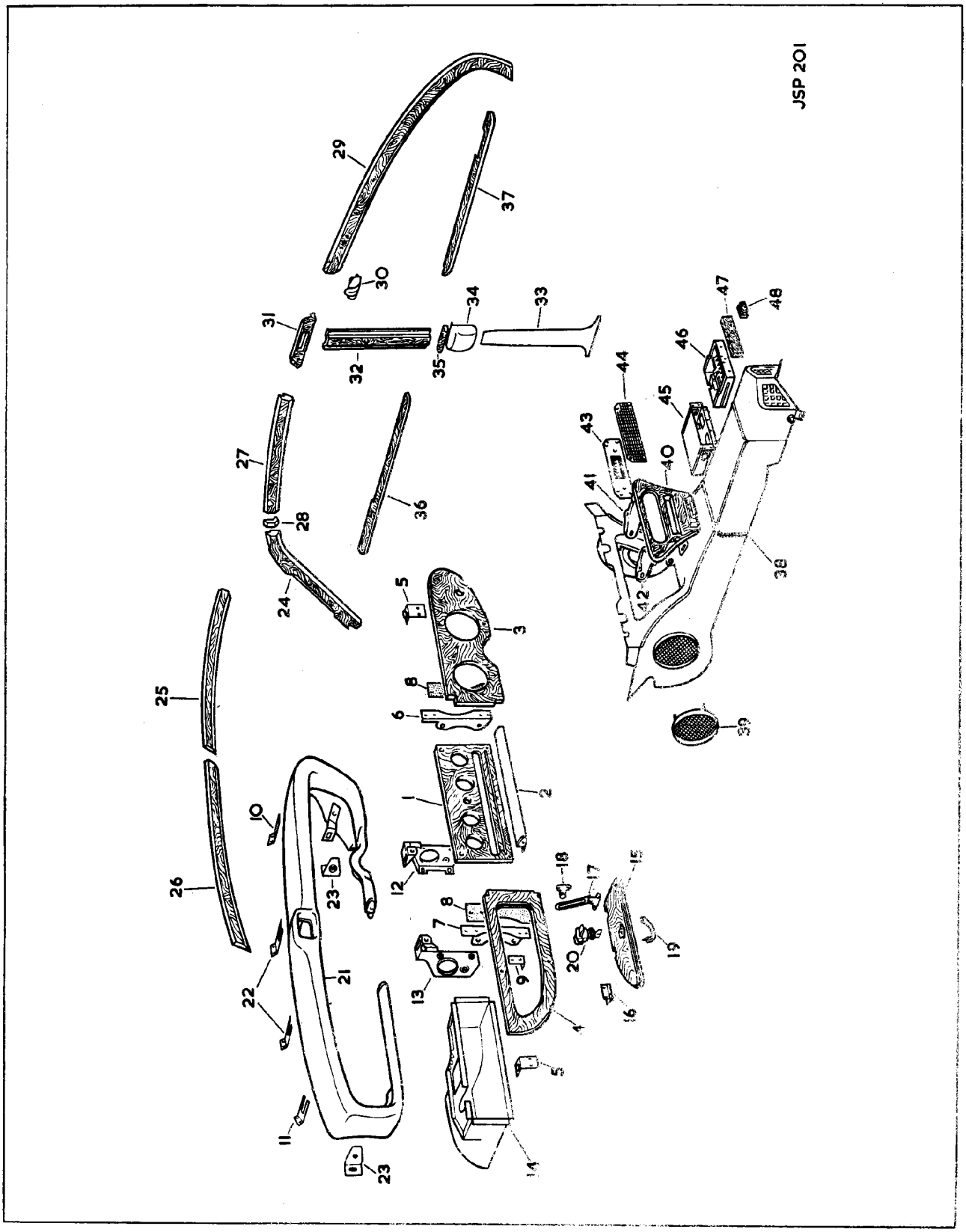

PLATE 46

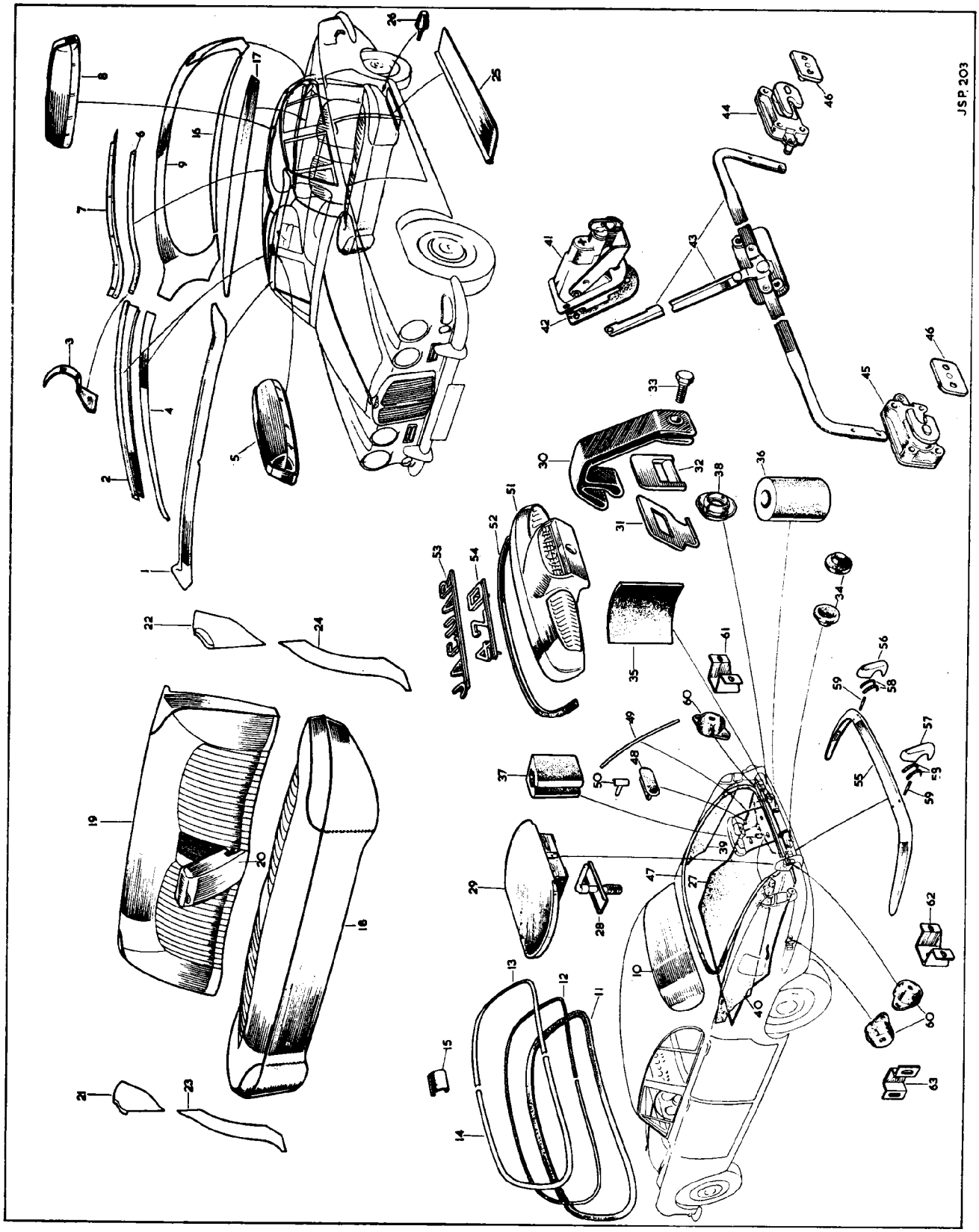

PLATE 49

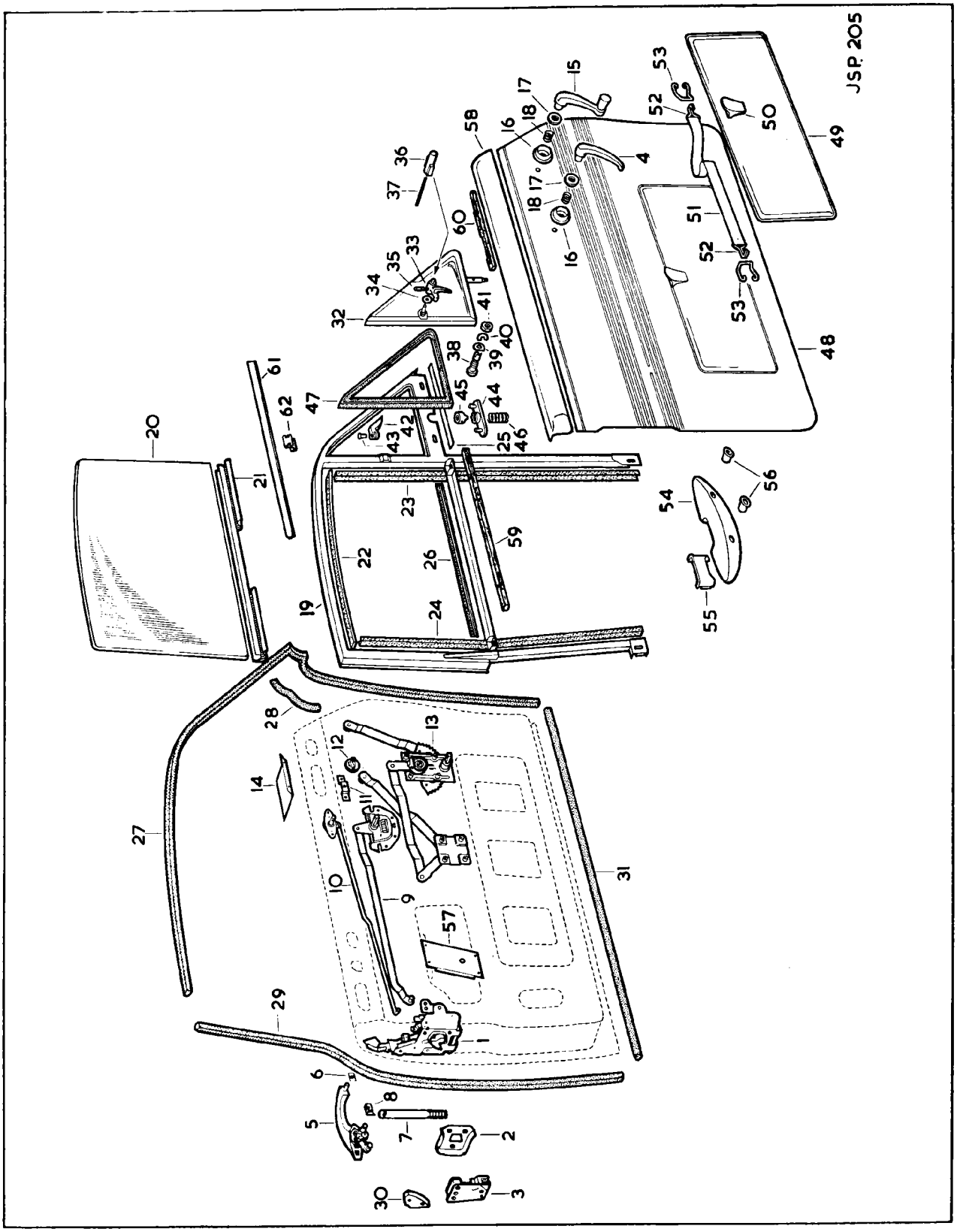

PLATE 50

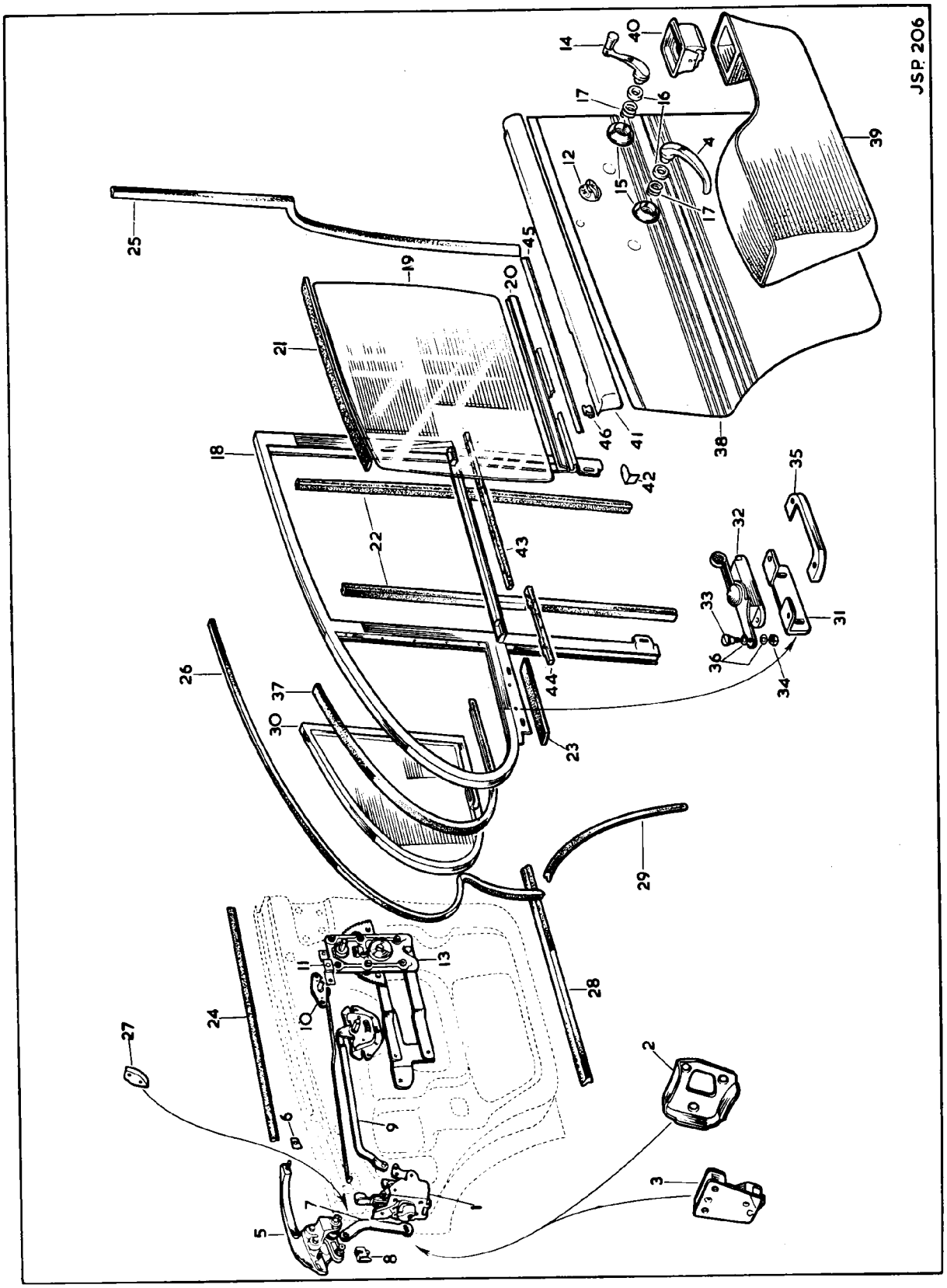

PLATE 51

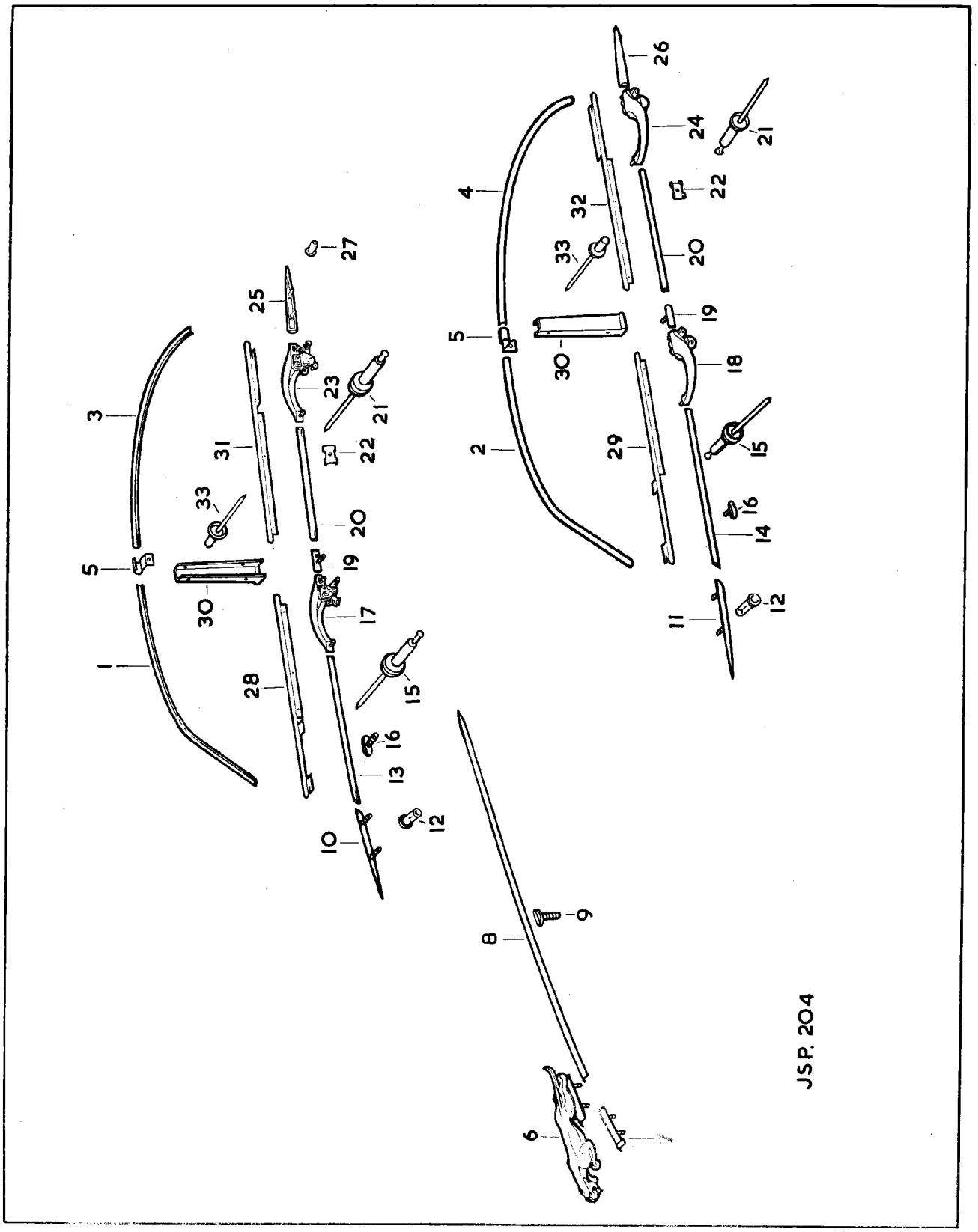

PLATE 52

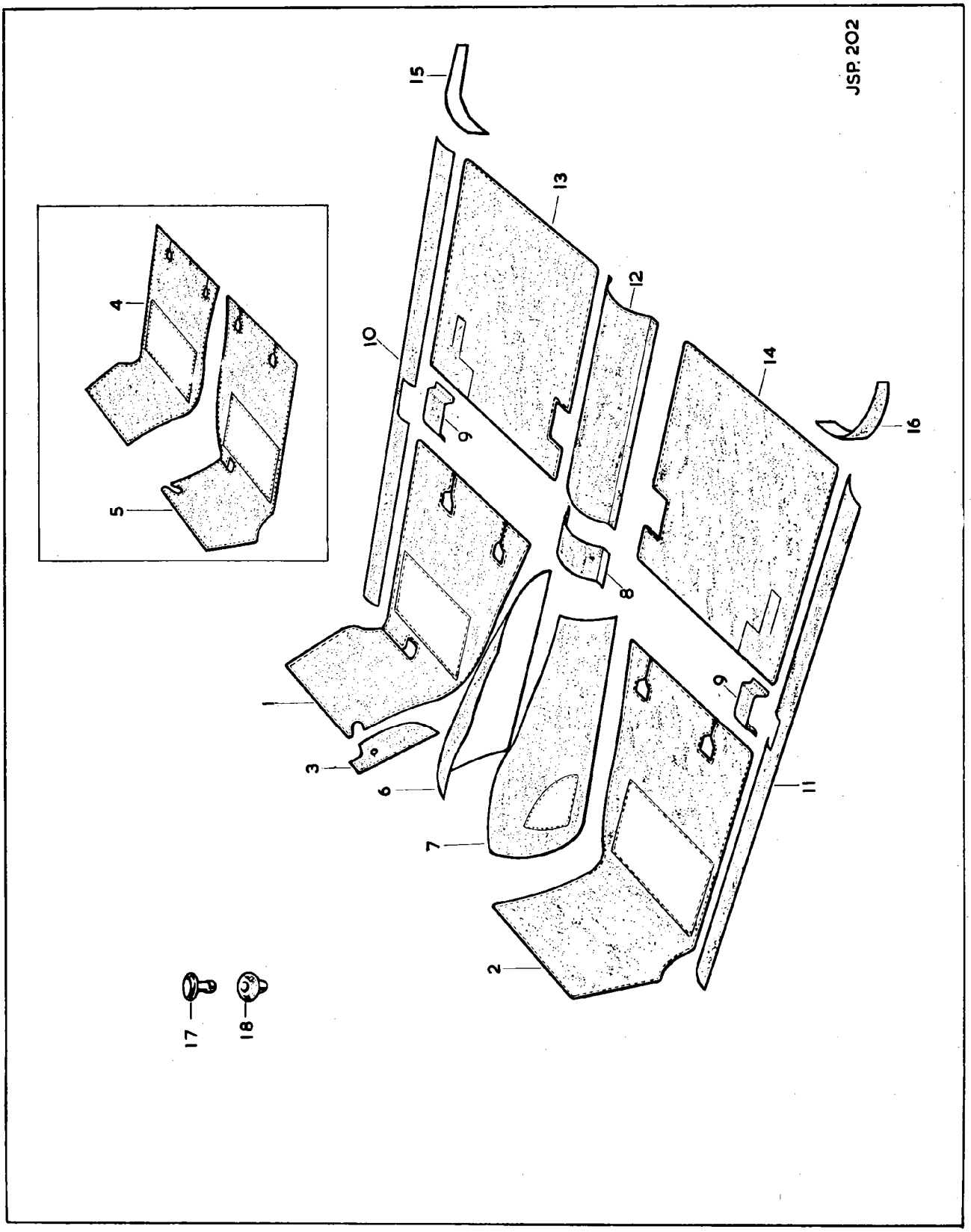

PLATE 53

Part No.	Description	Plate No.	No. per Unit	Remarks
BD.29434	**PARCEL TRAY ASSEMBLY (TRIMMED)**		1	R.H. DRIVE CARS ONLY
BD.29435	**PARCEL TRAY ASSEMBLY (TRIMMED)**		1	L.H. DRIVE CARS ONLY
DJJ.408/10C	**Screw**, Self-Tapping, securing Parcel Tray to Body		2	
BD.8536/6	**Spire Nut**, on Self-Tapping Screws		2	
AW.102/T	**Washer**, Plain, on Self-Tapping Screws		2	
DAZ.410/10C	**Screw**, Self-Tapping, securing Parcel Tray to Dash Sides		4	
BD.29438	**R.H. COVER PANEL FOR STEERING COLUMN (TRIMMED)**		1	R.H. DRIVE CARS ONLY
BD.29441	**L.H. COVER PANEL FOR STEERING COLUMN (TRIMMED)**		1	R.H. DRIVE CARS ONLY
BD.29439	**R.H. COVER PANEL FOR STEERING COLUMN (TRIMMED)**		1	L.H. DRIVE CARS ONLY
BD.29440	**L.H. COVER PANEL FOR STEERING COLUMN (TRIMMED)**		1	L.H. DRIVE CARS ONLY
BD.26308	**Acorn Nut**, securing Cover Panels		4	
AW.102/T	**Washer**, Plain, under Acorn Nuts		4	
BD.26928	**CONSOLE ASSEMBLY (TRIMMED)**		1	
BD.19984	**Bezel and Grille Assembly**, for Radio Loudspeakers		2	
UCN.113/L	**Nut**, securing Bezel and Grille Assemblies to Console		8	
C.721	**Washer**, Shakeproof, under Nuts		8	
AW.104/T	**Washer**, Plain, under Shakeproof Washers		8	
BD.25981	**Air Box Assembly**		1	
DAZ.114/10C	**Screw**, Self-Tapping, securing Air Box to Console		2	
BD.541/32	**Washer**, Special, on Self-Tapping Screws		2	
DAZ.410/10C	**Screw**, Self-Tapping, securing Air Box Assembly to Tunnel		2	
BD.8536/7	**Spire Nut**, receiving Self-Tapping Screws		2	
BD.10821	**PLUG (RUBBER) SEALING HOLE AT TOP OF TRANSMISSION COVER**		1	

ALWAYS QUOTE COLOUR REQUIRED WHEN ORDERING TRIMMED PARTS

SECTION 47

BODY FITTINGS

AUTOMATIC TRANSMISSION

Part No.	Description	Plate No.	No. per Unit	Remarks
BD.28929	**ACCESS PLATE, SEALING APERTURE AT L.H. SIDE OF TRANSMISSION COVER**		1	
BD.28930	**Gasket,** Neoprene, under Access Plate		1	
DZZ.410/8C	**Screw,** Self-Tapping, securing Access Plate to Transmission Cover		6	
	CARPETS			
BD.30579	**Carpet,** for R.H. Front Floor		1	R.H. DRIVE CARS ONLY
BD.30578	**Carpet,** for L.H. Front Floor		1	R.H. DRIVE CARS ONLY
BD.30577	**Carpet,** for R.H. Front Floor		1	L.H. DRIVE CARS ONLY
BD.30576	**Carpet,** for L.H. Front Floor		1	L.H. DRIVE CARS ONLY
BD.27980	**Carpet,** for R.H. Side of Transmission Cover		1	
BD.27644	**Carpet,** for L.H. Side of Transmission Cover		1	
	Other Carpets are as listed for Standard Transmission cars			
	FELT, UNDER CARPETS			
BD.30567	**Felt,** under R.H. Front Floor Carpet		1	
BD.30568	**Felt,** under L.H. Front Floor Carpet		1	
	Other Felts are as listed for Standard Transmission cars			
	INSULATING FELTS			
BD.30569	**Hardura Felt,** for Transmission Cover		1	
BD.30571	**Rubberised Felt,** for Transmission Cover		1	
BD.30572	**Rubberised Felt,** for side of Transmission Cover		1	
	Other Insulating Felts are as listed for Standard Tranmission cars			

ALWAYS QUOTE COLOUR REQUIRED WHEN ORDERING TRIMMED PARTS

SECTION 51

HEATER AND DEMISTER INSTALLATION

Part No.	Description	Plate No.	No. per Unit	Remarks
C.22212	**HEATER CASE ASSEMBLY**	58—1	1	
C.22554	**Air Vanes Assembly,** in Heater Case		1	
BD.11712/1	**Pop Rivet,** securing Air Vanes Assembly		6	
C.22563	**Lid,** for Heater Case	58—2	1	
DZZ.106/4C	**Screw,** Self-Tapping, securing Lid to Case		6	
C.15587	**Spring,** steadying Air Control Flaps	58—3	1	
BD.8291/2	**Screw,** Set, securing Heater Case to Dash		5	
C.724	**Washer,** Shakeproof, under Setscrews		5	
FW.104/T	**Washer,** Plain, under Shakeproof Washers		5	
C.22574	**SEAL (POLYURETHANE) ON UPPER FACE OF AIR CONTROL FLAP**	58—4	1	
C.15743	**SEAL (POLYURETHANE) ON LOWER FACE OF AIR CONTROL FLAP**	58—5	1	
C.22472	**WATER RADIATOR FOR HEATER**	58—6	1	
C.22575	**SEAL (POLYURETHANE) AT FRONT OF WATER RADIATOR**	58—7	1	
C.22576	**SEAL (POLYURETHANE) AT REAR OF WATER RADIATOR**	58—8	1	
C.22578	**SEAL (POLYURETHANE) AROUND AIR INTAKE APERTURE**	58—9	1	
BD.13603	**SEAL (POLYURETHANE) FOR DEMISTER OUTLETS**	58—10	1	
C.21805	**SEAL (RUBBER) UNDER HEATER CASE**	58—11	1	
C.22215	**HEATER MOTOR ASSEMBLY (FHM.5372—B)**	58—12	1	
9590	**Resistance,** 2 ohms (FHE.3109)		1	

HEATER AND DEMISTER INSTALLATION

Part No.	Description	Plate No.	No. per Unit	Remarks
C.22794	**HOUSING ASSEMBLY, MOUNTING HEATER MOTOR**	58—13	1	
C.22221	**Seal** (Polyurethane) between Housing and Air Intake Volute	58—14	1	
UFS.119/3R	**Screw,** Set, securing Housing to Air Intake Volute		4	
C.723/A	**Washer,** Shakeproof, on Setscrews		4	
C.22220	**Seal** (Polyurethane) between Motor and Housing	58—15	1	
C.14696	**Grommet,** mounting Heater Motor	58—16	3	
C.23376	**Distance Tube,** through Grommets	58—17	3	
C.22234/1	**Screw,** Set (Wedglock) securing Motor to Housing		3	
AW.102/T	**Washer,** Plain, on Setscrews		3	
C.23192	**BRACKET, MOUNTING RESISTANCE**	58—18	2	
C.23179	**Distance Tube,** between Brackets and Heater Case	58—19	2	
UFN.119/L	**Nut,** securing Brackets to Heater Case		2	
C.723/A	**Washer,** Shakeproof, under Nuts		2	
C.22216	**FAN, FOR HEATER MOTOR**	58—20	1	
C.17421	**ADAPTOR, AT REAR OF INLET MANIFOLD, FOR HEATER FEED**	58—21	1	
C.2296/1	**Washer** (Copper) on Adaptor	58—22	1	
C.27070	**ELBOW HOSE, FROM ADAPTOR TO FEED PIPE**	58—23	1	
C.2905/2	**Clip,** securing Hose	58—24	2	
C.27399	**FEED PIPE, FROM HOSE TO VACUUM VALVE**	58—25	1	
C.14999/6	**HOSE, CONNECTING FEED PIPE TO VACUUM VALVE**	58—26	1	
C.2905/2	**Clip,** securing Hose	58—27	2	
C.19704	**VALVE (VACUUM OPERATED) CONTROLLING WATER SUPPLY TO HEATER**	58—28	1	
C.8737/2	**Nut,** Self-Locking, securing Vacuum Valve to Bracket on Dash		1	
FW.105/T	**Washer,** Plain, under Self-locking Nut		1	
C.14999/6	**HOSE, FROM VACUUM VALVE TO FEED PIPE**	58—29	1	
C.2905/2	**Clip,** securing Hose	58—30	2	

SECTION 51

HEATER AND DEMISTER INSTALLATION

Part No.	Description	Plate No.	No. per Unit	Remarks
C.27068	**FEED PIPE, FROM VACUUM VALVE TO WATER RADIATOR**	58—31	1	
C.26574	**ELBOW HOSE, FROM FEED PIPE TO WATER RADIATOR**	58—32	1	
C.2905/2	**Clip,** securing Elbow Hose to Feed Pipe	58—33	1	
C.2905/1	**Clip,** securing Elbow Hose to Water Radiator	58—34	1	
C.26574	**ELBOW HOSE FROM WATER RADIATOR TO REAR RETURN PIPE**	58—35	1	
C.2905/1	**Clip,** securing Elbow Hose to Water Radiator	58—36	1	
C.2905/2	**Clip,** securing Elbow Hose to Rear Return Pipe	58—37	1	
C.27400	**REAR RETURN PIPE FROM ELBOW HOSE TO FRONT RETURN PIPE**	58—38	1	
C.27070	**ELBOW HOSE FROM REAR RETURN PIPE TO FRONT RETURN PIPE**	58—39	1	
C.2905/2	**Clip,** securing Hose	58—40	2	
C.27336	**FRONT RETURN PIPE AT R.H. SIDE OF CYLINDER BLOCK**	58—41	1	
C.27353	**Bracket,** supporting Front Return Pipe at rear	58—42	1	
C.26410	**Bracket,** supporting Front Return Pipe at front	58—43	1	
UFS.119/4R	**Screw,** Set, securing Front Return Pipe in Brackets		2	
UFN.119/L	**Nut,** on Setscrews		2	
C.723/A	**Washer,** Shakeproof, under Nuts		2	
C.14999/2	**HOSE, FROM FRONT RETURN PIPE TO ADAPTOR ON WATER PUMP**	58—44	1	
C.2905/2	**Clip,** securing Hose	58—45	2	
C.17421	**ADAPTOR, ON WATER PUMP, FOR WATER RETURN FROM HEATER**	58—46	1	
C.2296/1	**Washer** (Copper) on Adaptor	58—47	1	
C.15714/5	**OUTER CABLE FOR HEATER CONTROL**	58—48	1	

HEATER AND DEMISTER INSTALLATION

Part No.	Description	Plate No.	No. per Unit	Remarks
C.15973	**INNER CABLE, OPERATING HEATER CASE FLAP**	58—49	1	
C.13824	**Clip,** securing Inner Cable to Heater Flap	58—50	1	
C.17287	**CLAMP, SECURING OUTER CABLE**	58—51	2	
UFS.119/4R	**Screw,** Set, securing Clamps		2	
C.723/A	**Washer,** Shakeproof, on Setscrews		2	
C.14716	**VACUUM HOSE FROM ADAPTOR IN INLET MANIFOLD TO CHECK VALVE**	58—52	1	
C.15886/5	**Clip,** securing Hose	58—53	2	
C.27005	**CHECK VALVE ASSEMBLY, FOR RESERVAC TANK**	58—54	1	
C.27007	**Adaptor,** connecting Hose to Check Valve	58—55	1	
C.8016	**Grommet,** in Valance, for Check Valve Adaptor	58—56	1	
C.27100	**VACUUM HOSE, FROM CHECK VALVE TO RESERVAC TANK**	58—57	1	
C.15886/5	**Clip,** securing Hose	58—58	2	
C.26896	**RESERVAC TANK FOR HEATER VACUUM CONTROLS**	58—59	1	
C.8737/2	**Nut,** Self-locking, securing Reservac Tank to R.H. Front Wing Valance		2	
BD.541/5	**Washer,** plain, under Self-locking Nuts		2	
C.23665/5	**VACUUM HOSE, FROM CHECK VALVE TO CENTRE CONNECTION ON VACUUM CONTROL BOX**	58—60	1	
BD.3210	**Grommet,** in Dash, for Hose	58—61	1	
C.23665/2	**VACUUM HOSE, FROM L.H. CONNECTION ON VACUUM CONTROL BOX TO VACUUM DIAPHRAGM ON DASH**	58—62	1	
C.8016	**Grommet,** in Dash, for Hose	58—63	1	

SECTION 51

HEATER AND DEMISTER INSTALLATION

Part No.	Description	Plate No.	No. per Unit	Remarks
BD.25328	**VACUUM DIAPHRAGM ASSEMBLY FOR OPERATION OF SCUTTLE VENTILATOR**	58—64	1	
BD.25326	**Packing,** between Vacuum Diaphragm and Dash	58—65	1	
C.8667/17	**Nut,** Self-locking, securing Vacuum Diaphragm to Dash		2	
C.18892	**Clip,** securing Diaphragm Rod to Scuttle Ventilator	58—66	1	
C.23665/3	**VACUUM HOSE, FROM R.H. CONNECTION ON VACUUM CONTROL BOX TO VACUUM WATER VALVE**	58—67	1	
C.8016	**Grommet,** in Dash, for Hose	58—68	1	
BD.17163	**R.H. DEMISTER NOZZLE ASSEMBLY**	58—69	1	
BD.17164	**L.H. DEMISTER NOZZLE ASSEMBLY**	58—70	1	
DA.404/8C	**Screw,** Self-Tapping, securing Nozzles to Dash		4	
BD.31056	**Light Seal,** between Demister Nozzles and Screen Rail Facia	58—71	2	
BD.26707	**HOSE, CONVEYING AIR TO R.H. DEMISTER NOZZLE**	58—72	1	
BD.26449	**HOSE, CONVEYING AIR TO L.H. DEMISTER NOZZLE**	58—73	1	
BD.10343	**ELBOW (RUBBER) FOR DEMISTER NOZZLES**	58—74	2	
C.23358	**LEVER, FOR "HOT" AND "COLD" CONTROL, OPERATING HEATER FLAPS**	59—1	1	
C.22703	**Spacer,** between Lever and Clamping Brackets	59—2	1	
C.22704	**Distance Tube,** inside Spacer	59—3	1	
C.18414/1	**Washer,** Waved, between Lever and Distance Tube		1	
FW.104/T	**Washer,** Plain, on upper face of Lever		1	
C.22753/1	**Screw,** Set, securing Lever to Clamping Bracket		1	
C.15592	**ESCUTCHEON, FOR HEATER CONTROLS**	59—4	1	

HEATER AND DEMISTER INSTALLATION

Part No.	Description	Plate No.	No. per Unit	Remarks
C.22701	**CONTROL PLATE, BEHIND ESCUTCHEON (INSCRIBED "HOT" "COLD")**	59—5	1	
UFN.119/L	**Nut,** securing Escutcheon		2	
C.723/A	**Washer,** Shakeproof, under Nuts		2	
BD.25857	**KNOB, ON CONTROL LEVER**	59—6	1	
UCS.311/2H	**Screw,** Set, securing Knob to Lever		1	
C.17324	**END FITTING, SECURING INNER CABLE TO LEVER**	59—7	1	
C.17874	**Screw,** securing Inner Cable in Fitting and Fitting to Lever	59—8	1	
C.22960	**VACUUM CONTROL BOX ASSEMBLY FOR HEATER OPERATION**	59—9	1	
BD.25644	**Friction Bush,** securing Escutcheon around Vacuum Control Box	59—10	2	
DAZ.406/6C	**Screw,** Self-Tapping, securing Vacuum Control Box to Panel		2	
BD.25365	**ESCUTCHEON AROUND VACUUM CONTROL BOX (INSCRIBED "AIR", "HEAT", "OFF")**	59—11	1	
BD.25366	**BACKING PLATE, BEHIND ESCUTCHEON**	59—12	1	
BD.21864	**KNOB, FOR VACUUM CONTROL BOX**	59—13	3	
BD.21901	**Clip,** securing Knobs	59—14	3	
BD.25733	**R.H. AIR DIRECTOR BOX COMPLETE**	59—15	1	
BD.25734	**L.H. AIR DIRECTOR BOX COMPLETE**	59—16	1	
DAZ.408/8C	**Screw,** Self-Tapping, securing Air Director Boxes to Dash		8	

SECTION 51

HEATER AND DEMISTER INSTALLATION

Part No.	Description	Plate No.	No. per Unit	Remarks
BD.26574	**REMOTE CONTROL ASSEMBLY OPERATING VANES IN AIR DIRECTOR BOXES**	59—17	2	
BD.26615	**Adaptor**, at inner end of Remote Control Cables	59—18	2	
UCS.413/2H	**Screw**, Set, securing Adaptor to Inner Cables		4	
BD.26571	**BRACKET, FIXING OUTER CABLE OF REMOTE CONTROL**	59—19	2	
BD.25724	**COLLECTOR, AT REAR OF DASH, CONVEYING AIR TO REAR COMPARTMENT**	59—20	1	
DAZ.410/10C	**Screw**, Self-Tapping, securing Collector to Dash		1	
BD.26057	**HOSE, FROM COLLECTOR TO BUTTERFLY CONTROL ASSEMBLY**	59—21	1	
BD.25818	**BUTTERFLY CONTROL ASSEMBLY ON CONSOLE**	59—22	1	
BD.1328/1	**Bifurcated Rivet**, securing Butterfly Control Assembly to Console		4	
BD.25970	**LEVER ASSEMBLY, CONTROLLING AIR SUPPLY TO REAR COMPARTMENT**	59—23	1	
BD.25840	**ESCUTCHEON FOR LEVER (INSCRIBED "ON", "OFF", "REAR VENT")**	59—24	1	
UCN.111/L	**Nut**, securing Escutcheon to Console		4	
C.720	**Washer**, Shakeproof, under Nuts		4	
AW.104/T	**Washer**, Plain, under Shakeproof Washers		4	
BD.25857	**KNOB, ON CONTROL LEVER**	59—25	1	
UCS.311/2H	**Screw**, securing Knob to Lever		1	
BD.26258/1	**FRONT CONTROL ROD, FROM LEVER TO ADJUSTMENT SLIDE**	59—26	1	
BD.24836	**ADJUSTMENT SLIDE**	59—27	1	

HEATER AND DEMISTER INSTALLATION

Part No.	Description	Plate No.	No. per Unit	Remarks
BD.26258/2	**REAR CONTROL ROD, FROM ADJUSTMENT SLIDE TO BUTTERFLY CONTROL ASSEMBLY**	59—28	1	
UCS.113/2R	**Screw,** Set, securing Control Rods to Adjustment Slide		2	
BD.21801	**Retaining Washer,** securing Control Rods at ends	59—29	2	
BD.26058	**HOSE, FROM BUTTERFLY CONTROL ASSEMBLY TO AIR DISTRIBUTOR BOX**	59—30	1	
BD.25981	**AIR DISTRIBUTOR BOX ASSEMBLY FOR REAR COMPARTMENT HEATING**	59—31	1	
DAZ.114/10C	**Screw,** Self-Tapping, securing Air Distributor Box to Console		2	
BD.541/32	**Washer,** Special, on Self-Tapping Screws		2	
DAZ.410/10C	**Screw,** Self-Tapping, securing Air Distributor Box to Propeller Shaft Tunnel		2	
BD.8536/7	**Spire Nut,** on Self-Tapping Screws		2	

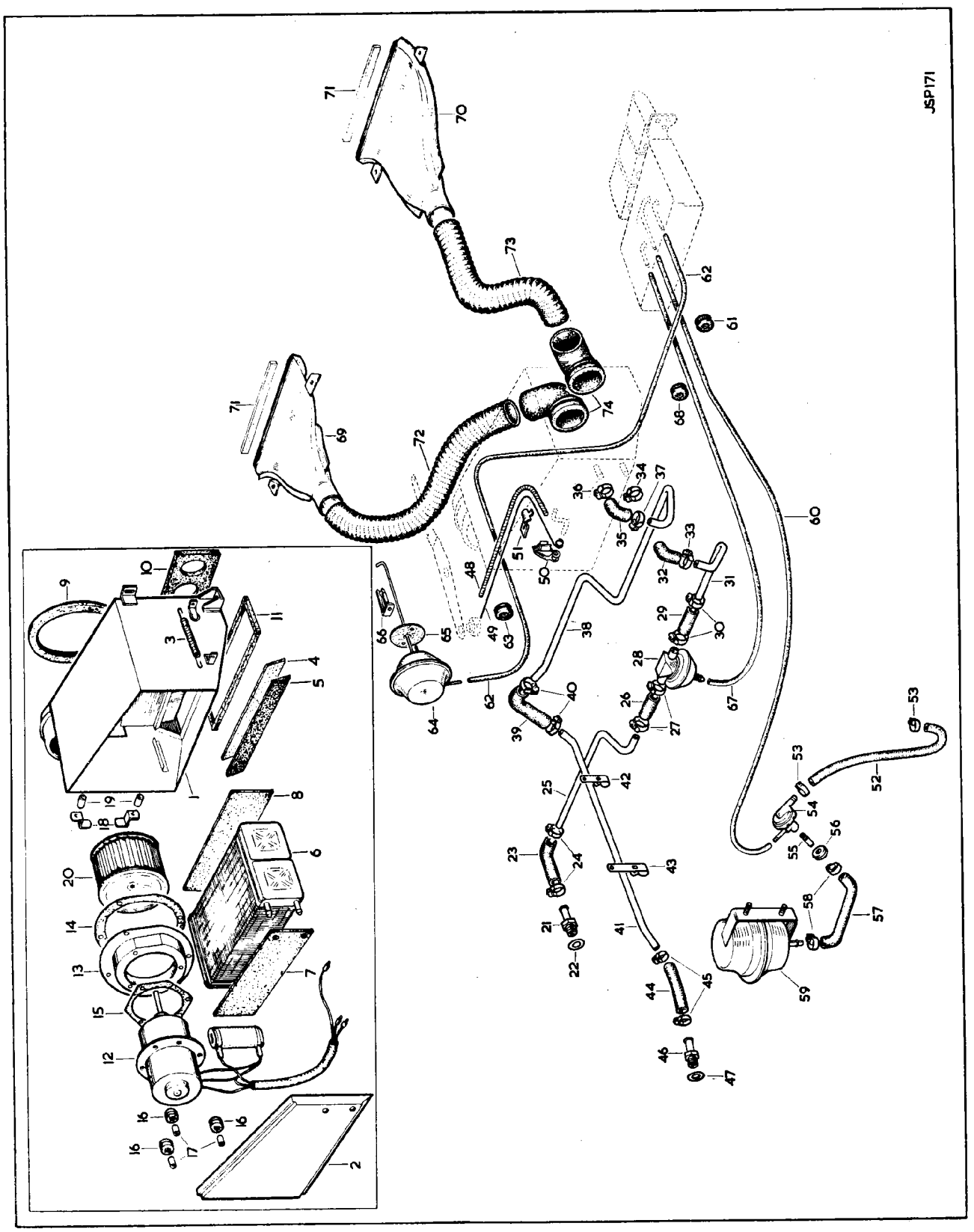

PLATE 58

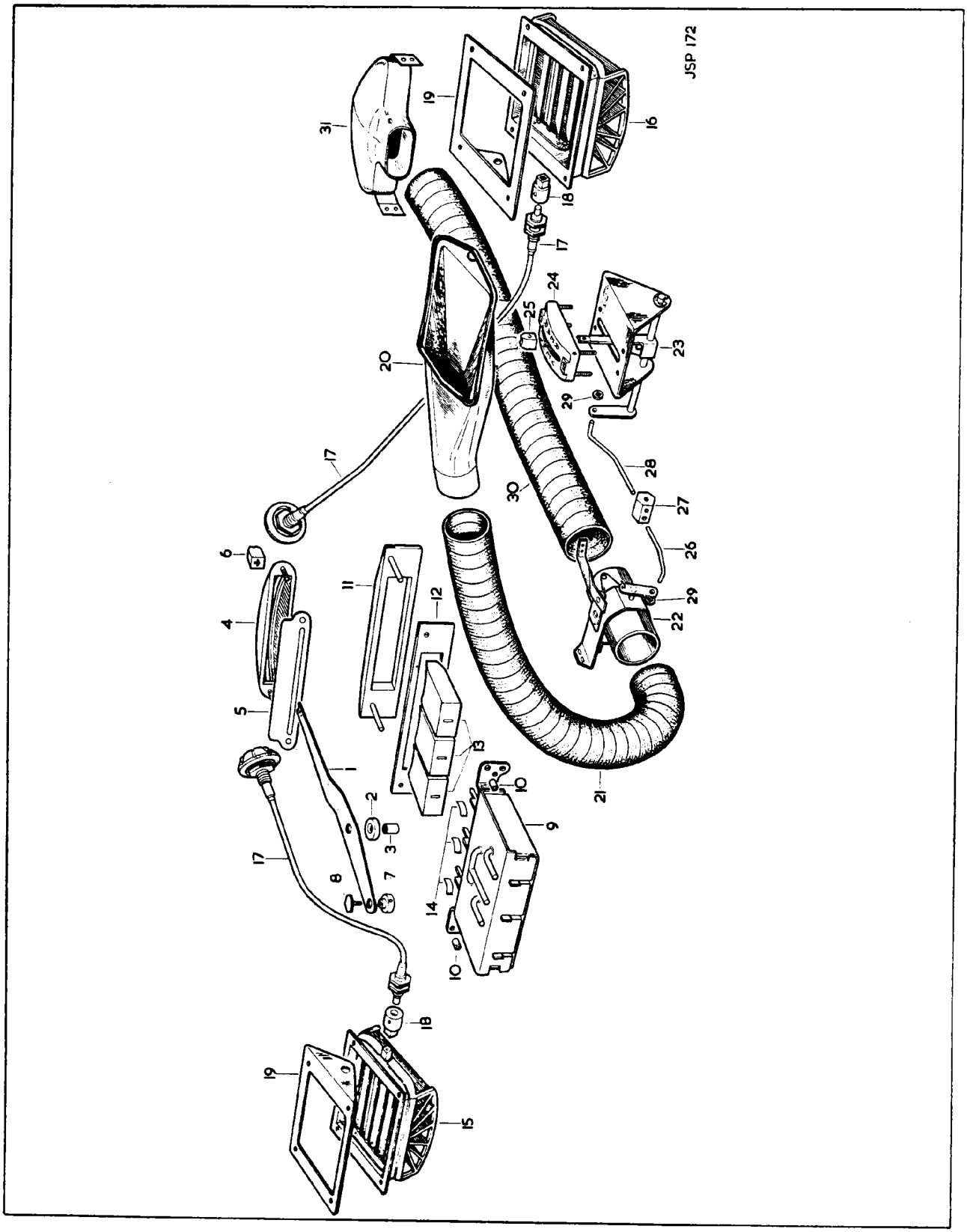

PLATE 59

SECTION 54

AIR CONDITIONING INSTALLATION

Part No.	Description	Plate No.	No. per Unit	Remarks
C.22183	**COMPRESSOR ASSEMBLY (40R.301)**	62—1	1	
C.24438	**Shaft Seal**		1	
C.24439	**Valve Plate and Gasket**		1	
C.24440	**Service Valve Gasket**		2	
C.24441	**Discharge Valve**		1	
C.24442	**Suction Valve**		1	
UCS.137/6R	**Screw,** Set, securing Compressor to Mounting Bracket		4	
FG.106/X	**Washer,** Spring, on Setscrews		4	
FW.106/T	**Washer,** Plain, under Spring Washers		4	
C.24665	**BRACKET, MOUNTING COMPRESSOR**	62—2	1	
UFS.137/7R	**Screw,** Set, securing Mounting Bracket to Alternator Bracket		2	
UFN.137/L	**Nut,** on Setscrews		2	
FG.106/X	**Washer,** Spring, under Nuts		2	
UFS.131/7R	**Screw,** Set, securing Mounting Bracket to Support Bracket		1	
UFN.131/L	**Nut,** on Setscrew		1	
FG.105/X	**Washer,** Spring, under Nut		1	
FW.105/T	**Washer,** Plain, under Spring Washer		1	
C.24668	**SUPPORT BRACKET FOR COMPRESSOR MOUNTING BRACKET**	62—3	1	
C.24678	**Stud,** fixing Support Bracket and Front Exhaust Manifold to Cylinder Head	62—4	2	**REPLACES C.2325 STUD See Cylinder Head**
UFN.131/L	**Nut,** on Studs		2	
FG.105/X	**Washer,** Spring, under Nuts		2	
C.11583	**Spacer,** behind Support Bracket	62—5	2	
C.24887	**STEADY BRACKET FOR COMPRESSOR MOUNTING BRACKET**	62—6	1	
C.25749	**Screw Plate Assembly,** securing Steady Bracket to Mounting Bracket	62—7	1	
UFN.131/L	**Nut,** on Screws		2	
FG.105/X	**Washer,** Spring, under Nuts		2	
FW.105/T	**Washer,** Plain, under Spring Washers		2	
UFB.131/22R	**Bolt,** securing Steady Bracket and Front Timing Cover to Cylinder Block		1	**REPLACES UFB.131/14R BOLT See Timing Gear**
FG.105/X	**Washer,** Spring, on Bolt		1	
C.24674	**Spacer,** behind Steady Bracket	62—8	1	
C.26163	**Stud,** fixing Steady Bracket and Water Pump to Front Timing Cover	62—9	2	**REPLACES C.2184 STUD See Timing Gear**
UFN.131/L	**Nut,** on Studs		2	
FG.105/X	**Washer,** Spring, under Nuts		2	
C.11583	**Spacer,** behind Steady Bracket	62—10	2	

AIR CONDITIONING INSTALLATION

Part No.	Description	Plate No.	No. per Unit	Remarks
C.25761	**MAGNETIC CLUTCH ASSEMBLY FOR COMPRESSOR DRIVE (321504)**	62—11	1	
C.22196	**Stationary Field Assembly**		1	
C.22199	**Terminal Connector**		1	
C.25762	**Pulley and Hub Assembly**		1	
C.22202	**Bolt**, Special (Nylok) securing Pulley Hub on Shaft		1	
C.22198	**Washer**, Special, on Bolt		1	
C.26466	**Bolt**, Special, securing Clutch Assembly to Compressor Body		4	
C.25660	**BELT, DRIVING COMPRESSOR**	62—12	1	
C.18733	**IDLER PULLEY ASSEMBLY, TENSIONING COMPRESSOR DRIVING BELT**	62—13	1	
C.3968/2	**Nut**, Self-Locking, securing Idler Pulley to Pivot Arm		1	
C.24675	**PIVOT ARM FOR IDLER PULLEY**	62—14	1	
UFS.143/7R	**Screw**, Set, securing Pivot Arm to Steady Bracket		1	
FG.107/X	**Washer**, Spring, on Setscrew		1	
C.25652	**PULLEY, ON CRANKSHAFT, FOR COMPRESSOR DRIVING BELT**	62—15	1	**REPLACE C.23363 PULLEY See Cylinder Block**
C.23131	**PULLEY, ON CRANKSHAFT, FOR WATER PUMP BELT**	62—16	1	
UFB.131/14R	**Bolt**, securing Pulleys to Damper Hub		4	**See also Cylinder Block**
C.725	**Washer**, Shakeproof, on Bolts		2	
C.27289	**HOSE FROM DISCHARGE VALVE ON COMPRESSOR TO UPPER CONNECTION ON CONDENSER (46" LONG)**	62—17	1	
C.27860	**Clip**, securing Hose to L.H. Wing Valance	62—18	1	
DAZ.410/8C	**Screw**, Self-Tapping, securing Clip		1	
C.27699	**CONDENSER ASSEMBLY**	62—19	1	
C.27881	**Bracket Assembly**, fixing Condenser at top	62—20	2	
UFS.131/13R	**Screw**, Set, securing Bracket and Condenser to Bonnet Lock Reinforcement and mounting Bonnet Buffers		2	
UFN.131/L	**Nut**, on Setscrew, for Bonnet Buffer Adjustment		2	
BD.541/5	**Washer**, Special, between Nut and Grommet		2	
C.10126	**Grommet**, in Bonnet Lock Reinforcement, receiving Setscrew	62—21	2	
C.22149/1	**Distance Tube**, in Grommets	62—22	2	
UFS.131/4R	**Screw**, Set, securing Condenser to Front Cross Member		2	
C.725	**Washer**, Shakeproof, on Setscrews		2	

SECTION 54

AIR CONDITIONING INSTALLATION

Part No.	Description	Plate No.	No. per Unit	Remarks
C.27199	**HOSE FROM LOWER CONNECTION ON CONDENSER TO RECEIVER/ DRIER UNIT (166" LONG)**	62—23	1	
C.27201	**Protective Sleeve** (Rubber) around Hose, at L.H. Front Wing Stay Bracket	62—24	1	
C.22156	**Clip,** securing Hose to Underframe	62—25	8	
DAZ.410/8C	**Screw,** Self-Tapping, securing Clips		8	
C.976	**Grommet,** in Boot Floor, for Hose	62—26	1	
C.27211	**RECEIVER/DRIER UNIT ASSEMBLY**	62—27	1	
C.5173	**Clip,** holding Receiver/Drier Unit	62—28	2	
UFS.319/8H	**Screw,** Set, through Clips		2	
UFN.119/L	**Nut,** on Setscrews		2	
C.723/A	**Washer,** Shakeproof, under Nuts		2	
C.27574	**Mounting Plate,** for Clips	62—29	1	
UFS.819/3H	**Screw,** Set, securing Mounting Plate to Evaporator Casing		2	
UFS.125/4R	**Screw,** Set, securing Clips to Mounting Plate		2	
UFN.125/L	**Nut,** on Setscrews		2	
C.724	**Washer,** Shakeproof, under Nuts		2	
C.27213	**HOSE FROM RECEIVER/DRIER UNIT TO EXPANSION VALVE IN EVAPORATOR (20" LONG)**	62—30	1	**SUPPLIED AS PART OF EVAPORATOR ASSEMBLY**
C.27263	**EVAPORATOR ASSEMBLY (524801)**	62—31	1	
C.27208	**Fan Motor Assembly** (Clockwise)		1	
C.27207	**Fan Motor Assembly** (Anti-Clockwise)		1	
C.27209	**Evaporator Coil Assembly**		1	
C.27210	**Expansion Valve Assembly**		1	
C.27213	**Hose,** from Receiver/Drier Unit to Expansion Valve		1	
BD.11524	**Grommet,** in Evaporator Casing, for Thermostat Tube	62—32	2	
C.1040/6	**Clip,** securing Motor Cable to Evaporator Casing		2	
C.17077	**Sleeve** (Rubber) in Clip		2	
C.22920/2	**Drain Hose** (Upper) for Evaporator (2" long)	62—33	2	
C.22920/1	**Drain Hose** (Lower) for Evaporator (17" long)	62—34	2	
C.22919	**Pipe,** connecting Drain Hoses	62—35	2	
C.15886/3	**Clip,** securing Drain Hoses	62—36	6	
C.975	**Grommet,** in Boot Floor, for Drain Hoses	62—37	2	
C.1040/3	**Clip,** securing Drain Hoses to Rear Suspension Cross Member	62—38	2	
UFS.119/4R	**Screw,** Set, securing Clips		2	
UFN.119/L	**Nut,** on Setscrews		2	
C.723/A	**Washer,** Shakeproof, under Nuts		2	
AW.102/T	**Washer,** Plain, under Shakeproof Washers		2	
C.27570	**BRACKETASSEMBLY,R.H.,MOUNTING EVAPORATOR IN BOOT (224606)**	62—39	1	

AIR CONDITIONING INSTALLATION

Part No.	Description	Plate No.	No. per Unit	Remarks
C.27571	**BRACKET ASSEMBLY, L.H., MOUNTING EVAPORATOR IN BOOT (224607)**	62—40	1	
UCS.131/6R	**Screw,** Set, securing Brackets to Body		4	
C.740	**Washer,** Shakeproof, on Setscrews		4	
FW.105/T	**Washer,** Plain, under Shakeproof Washers		4	
UCS.137/6R	**Screw,** Set, securing Evaporator to Brackets		4	
C.726	**Washer,** Shakeproof, on Setscrews		4	
FW.106/T	**Washer,** Plain, under Shakeproof Washers		4	
C.27262	**HOSE FROM EVAPORATOR COIL TO SUCTION VALVE ON COMPRESSOR (140″ LONG)**	62—41	1	
C.22158	**Clip,** securing Hose to Underframe Side Member	62—42	7	
DAZ.410/8C	**Screw,** Self-Tapping, securing Clips		7	
C.977	**Grommet,** in Boot Floor and L.H. Front Wing Valance, for Hose	62—43	2	
C.27204	**SHIELD, ON UNDERFRAME SIDE MEMBER, SUPPORTING HOSES**	62—44	1	
DZZ.408/6C	**Screw,** Self-Tapping, securing Shield		5	
C.27558	**R.H. COVER PLATE, ON BOOT FLOOR, RECEIVING HOSES AND GROMMETS**	62—45	1	
C.27559	**L.H. COVER PLATE, ON BOOT FLOOR, RECEIVING HOSE AND GROMMET**	62—46	1	
DAZ.408/8C	**Screw,** Self-Tapping, securing Cover Plates		8	
BD.20388	**Gasket** (Rubber) under Cover Plates	62—47	2	
C.27610	**TRIM PANEL ON REAR FACE OF EVAPORATOR CASING**	62—48	1	
DZZ.408/8C	**Screw,** Self-Tapping, securing Trim Panel		5	
C.27215	**AIR INTAKE GRILLE ON PARCEL SHELF**	62—49	2	
BD.524/7	**Bifurcated Rivet,** securing Grilles to Parcel Shelf Trim Panel		4	
C.23376	**Distance Tube,** under Grilles		4	
AW.102/T	**Washer,** Plain, on Rivets, under Trim Panel		4	
C.27264	**AIR DISCHARGE DUCT ASSEMBLY ON PARCEL SHELF**	62—50	1	
BD.524/7	**Bifurcated Rivet,** securing Air Duct to Parcel Shelf Trim Panel		4	
AW.102/T	**Washer,** Plain, on Rivets, under Trim Panel		4	

SECTION 54

AIR CONDITIONING INSTALLATION

Part No.	Description	Plate No.	No. per Unit	Remarks
BD.31047	**TRIM PANEL ASSEMBLY ON PARCEL SHELF**	62—51	1	**REPLACES BD.30250 TRIM PANEL** See Body Fittings
BD.21902	**Clip,** retaining Trim Panel		3	
C.27220	**THERMOSTAT AND TUBE ASSEMBLY**	62—52	1	
11464	**Sleeve** (Polythene) protecting Tube (OOR.216)	62—53	1	
C.27221	**SWITCH, CONTROLLING COMPRESSOR AND FANS**	62—54	1	
C.27222	**Screw,** Set, securing Switch to Thermostat	62—55	2	
C.27219	**Screw,** Set, securing Switch to Control Panel	62—56	2	
11465	**Spacer,** between Switch and Control Panel (120162)	62—57	1	
C.27217	**KNOB, ON COMPRESSOR/FAN SWITCH**	62—58	1	
C.27218	**KNOB, CONTROLLING THERMOSTAT**	62—59	1	
11467	**Clip,** securing Thermostat Control Knob to Spindle (OOR.314)	62—60	1	
11466	**Washer** (Felt) between Knobs (OOR.262)	62—61	1	
BD.30268	**CONTROL PANEL MOUNTING THERMOSTAT AND SWITCH**	64—62	1	
BD.29041	**Nut,** Knurled, securing Control Panel to Mounting Plate	62—63	2	
BD.30265	**MOUNTING PLATE ASSEMBLY FOR CONTROL PANEL**	62—64	1	
UCS.416/3H	**Screw,** Set, securing Mounting Plate to Heat Control Lever Cover on Parcel Tray		2	
UCN.116/L	**Nut,** on Setscrews		2	
C.737	**Washer,** Shakeproof, under Nuts		2	
C.27226	**MAIN HARNESS ASSEMBLY (324501)**		1	
C.27861	**Clip,** securing Main Harness		3	
DZZ.408/6C	**Screw,** Self-Tapping, securing Clips		3	
C.27815	**RELAY HARNESS ASSEMBLY**		1	
10464	**Fuse Holder,** in Relay Harness (54190387)		1	
147	**Fuse** (25 amps) in Holder (188216)		1	
BD.22655	**Clip,** securing Fuse Holder to Dash		1	
DAZ.404/4C	**Screw,** Self-Tapping, securing Clip		1	

AIR CONDITIONING INSTALLATION

Part No.	Description	Plate No.	No. per Unit	Remarks
C.27816	**CABLE FROM ALTERNATOR TO RELAY**		1	
C.19085	**RELAY (33234/A—9.RA)**		1	
UFS.119/9R	**Screw,** Set, securing Relay to L.H. Front Wing Valance		2	
UFN.119/L	**Nut,** on Setscrews		2	
C.723/A	**Washer,** Shakeproof, under Nuts		2	
C.28170	**RESISTOR ON FRONT OF DASH**		2	
C.27268	**BRACKET MOUNTING RESISTORS**		2	
DZZ.408/6C	**Screw,** Self-Tapping, securing Bracket to Dash Front		4	
C.27266	**Clip,** on Brackets, supporting Resistors		4	
3586	**CONNECTOR BLOCK (RUBBER) FOR MAGNETIC CLUTCH (2 WAY) (900288)**		1	
C.1040/12	**Clip,** securing Connector Block		1	
UCS.137/5R	**Screw,** Set, securing Clip to side of Compressor		1	
FG.106/X	**Washer,** Spring, on Setscrew		1	
FW.106/T	**Washer,** Plain, under Spring Washer		1	
C.27583	**CLIP, SECURING AIR INTAKE HOSE TO COMPRESSOR BODY**		1	**REPLACE C.23432 BRACKET C.23532 CLIP, AND FIXINGS See Air Cleaner**
UCS.137/5R	**Screw,** Set, securing Clip		1	
FG.106/X	**Washer,** Spring, on Setscrew		1	
C.21958	**FRONT SUSPENSION COIL SPRING (PURPLE CODE ONLY)**		2	**Fitted from Chassis No. IF.1001 to IF.4220 IF.25001 to IF.26983**
C.28233	**FRONT SUSPENSION COIL SPRING**		2	**Fitted to Chassis No. IF.4221 and subs. IF.26984 and subs.**
C.11874	**Packing Ring** ($\frac{1}{4}$" thick) at top of Springs		As req'd	
C.11874/1	**Packing Ring** ($\frac{1}{8}$" thick) at top of Springs		As req'd	
	NOTE: Packing Rings are used in accordance with the free length of Springs. A patch of coloured paint on the Spring Coils indicates the packing required. The following table shows the co-relation of Colour Code to Packing Rings.			

SECTION 54

AIR CONDITIONING INSTALLATION

Part No.	Description	Plate No.	No. per Unit	Remarks
COIL SPRING PART NO.	**COLOUR CODE**	**PACKING REQUIRED R.H. Spring**	**L.H. Spring**	**REMARKS**
C.21958	**PURPLE ONLY**	⅛" / ¼"	¼" / ¼"	**R.H. DRIVE CARS ONLY** / **L.H. DRIVE CARS ONLY**
C.28233	**RED**	⅛" / ¼"	¼" / ¼"	**R.H. DRIVE CARS ONLY** / **L.H. DRIVE CARS ONLY**
C.28233	**YELLOW**	¼" / ⅛"	⅛" / ⅛"	**R.H. DRIVE CARS ONLY** / **L.H. DRIVE CARS ONLY**
C.28233	**PURPLE**	⅛" / None req'd	None req'd / None req'd	**R.H. DRIVE CARS ONLY** / **L.H. DRIVE CARS ONLY**
C.23860	**FILLER CAP (13 LB. PRESSURE) ON RADIATOR HEADER TANK**		1	**REPLACES C.18460 FILLER CAP. See Cooling System**
BD.31049	**MAT ASSEMBLY ON BOOT FLOOR**		1	**REPLACES BD.26466 MAT See Body Fittings**
BD.31052	**Rubberised Felt**, for Boot Floor, Front		2	**REPLACE BD.26425, BD.26426, AND BD.26427 FELTS RESPECTIVELY See Body Fittings**
BD.31050	**Rubberised Felt**, for Boot Bulkhead		1	
BD.31051	**Rubberised Felt**, for Boot, under Parcel Shelf		1	
C.26870	**OIL DIPSTICK FOR COMPRESSOR (IN TOOL KIT)**		1	

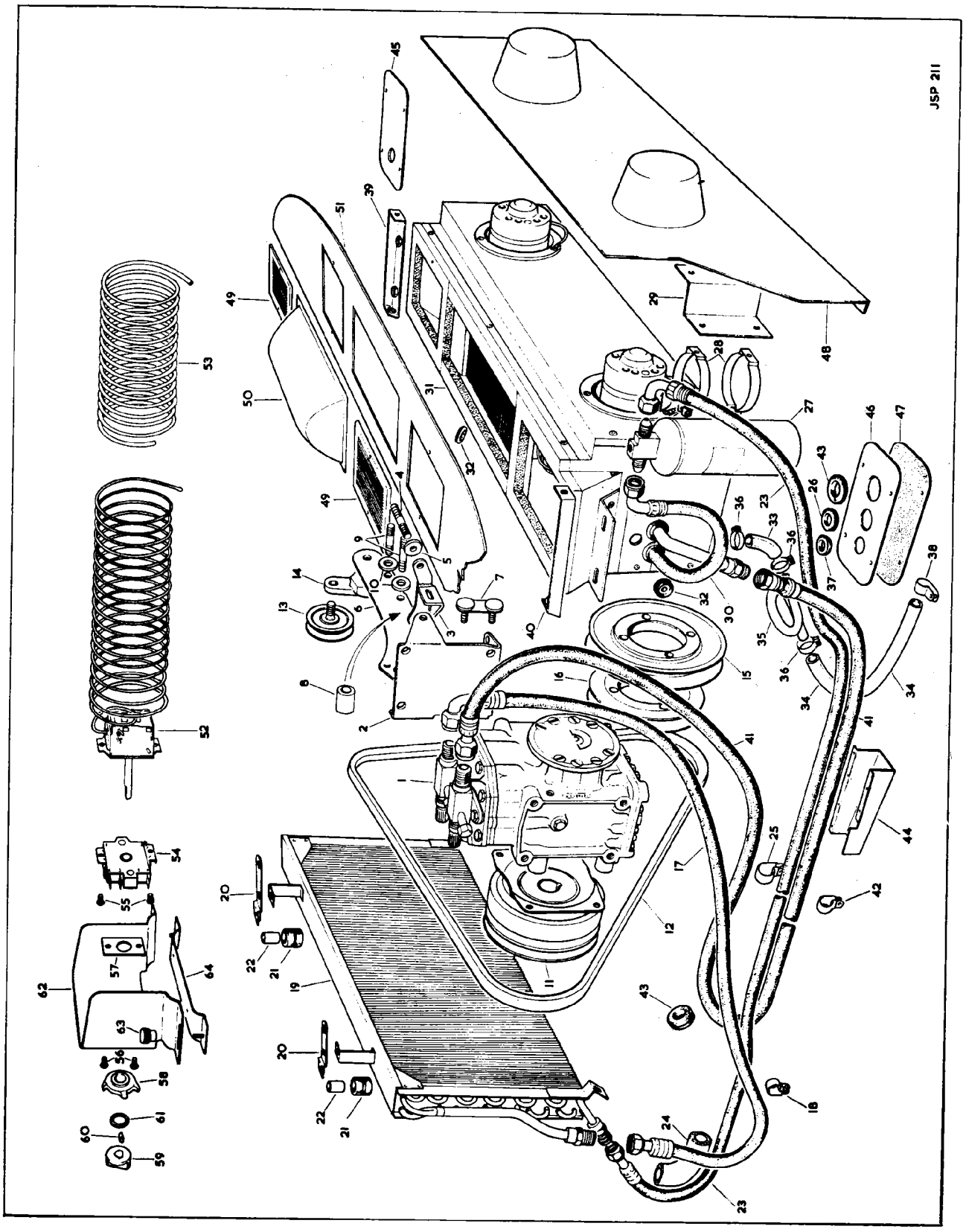

PLATE 62