The

SERIES MGA

SERVICE PARTS LIST

(SECOND EDITION)

This List cancels Edition One of Part No. AKD599 and embodies all information issued up to and including Parts List Amendment No. PMG/409

WHEN ORDERING FURTHER COPIES OF THIS LIST PART No. AKD1055 SHOULD BE QUOTED

Issued by

B.M.C. SERVICE LIMITED

COWLEY · OXFORD · ENGLAND

Telephone - - - - - - - - Oxford 77777
Telex - - - - - Oxford Telex 83145 and 83146
Telegrams - - - - - - Mowog, Telex, Oxford

Cables - - - - - - - Mowog, Oxford, England
Codes - - Bentley's, Bentley's Second Phrase, A.B.C. (5th and 6th Editions), Western Union and Private

FEBRUARY 196

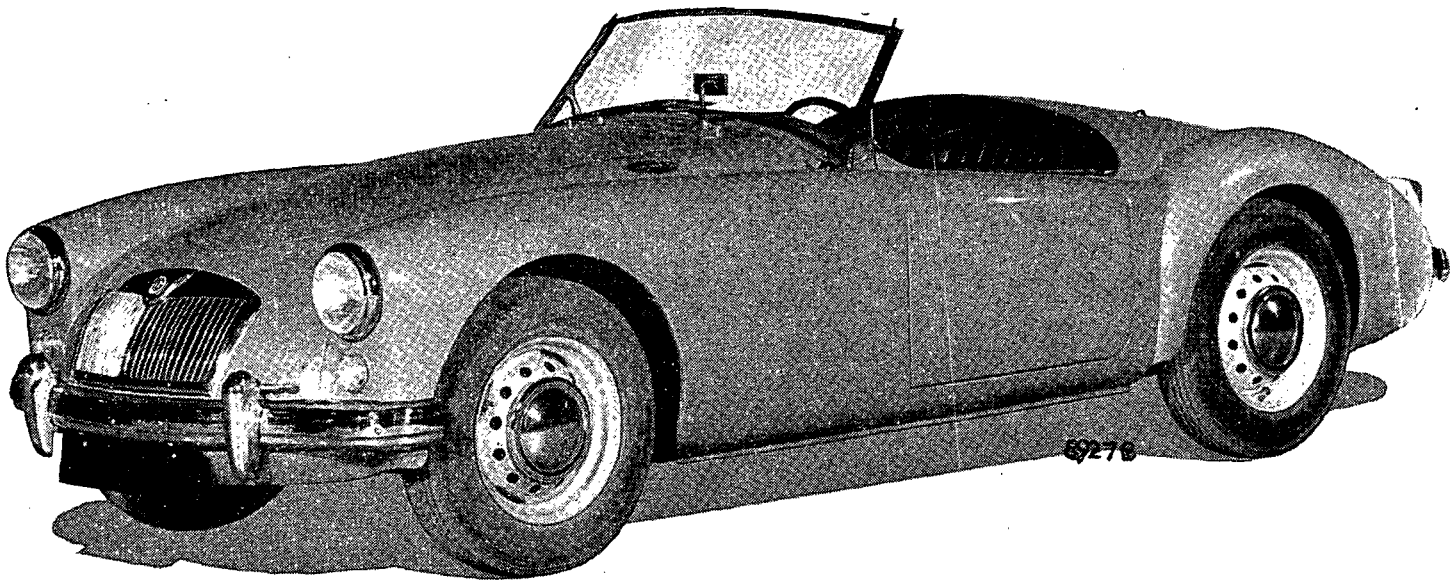

LOCATION OF SERIAL NUMBERS

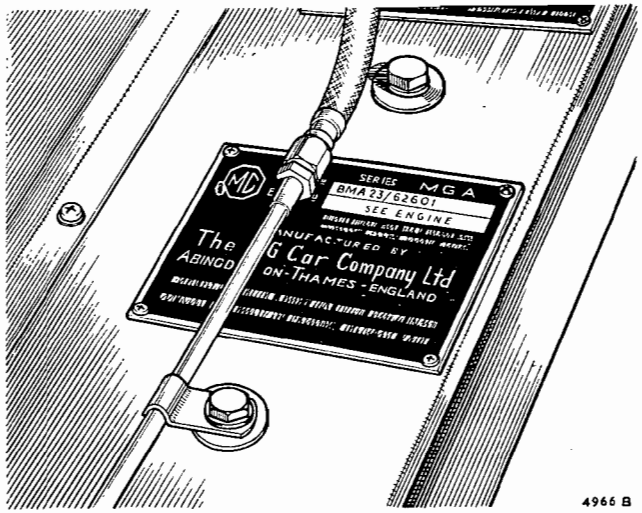

The **Car Number** is stamped on a plate secured to the top left-hand side of the dash panel

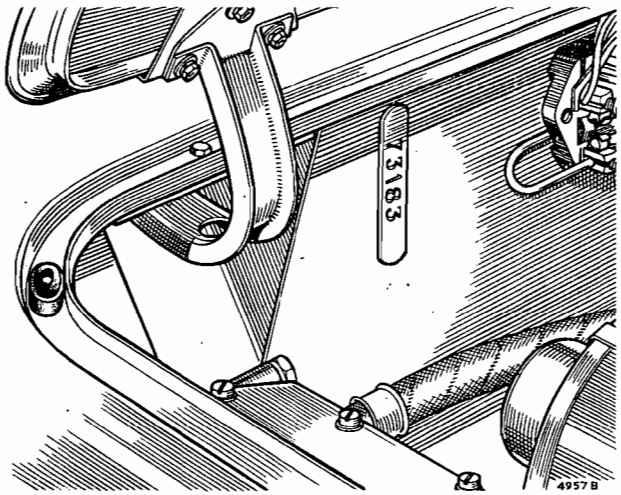

The **Body Number** is stamped on a plate secured to the bulkhead between the right-hand bonnet hinge and the fuse block

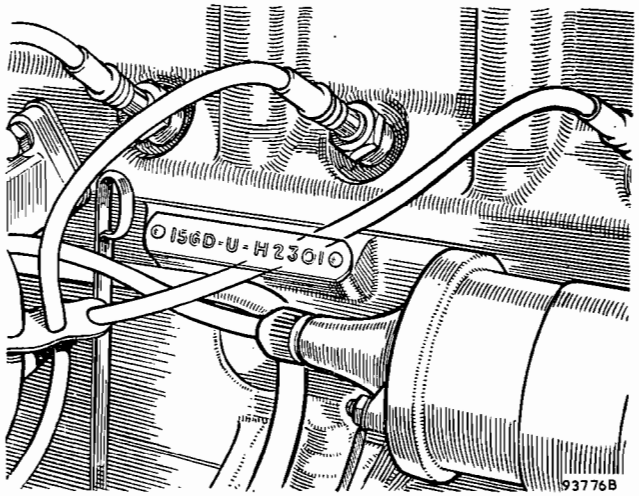

The **Engine Number** is stamped on a plate secured to the right-hand side of the cylinder block

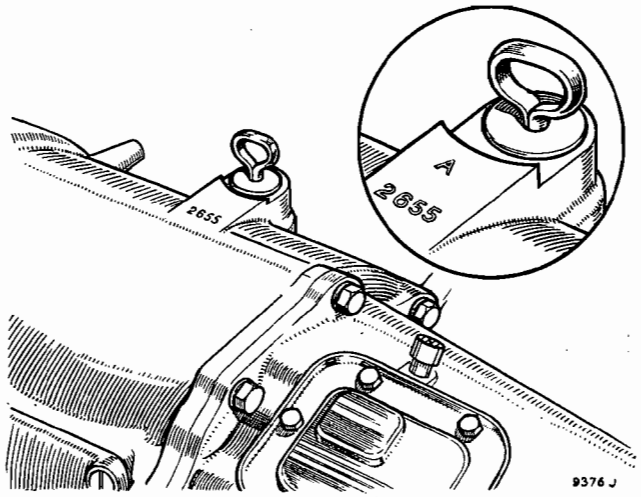

The **Gearbox Number** is stamped on the top of the gearbox casing adjacent to the dipstick

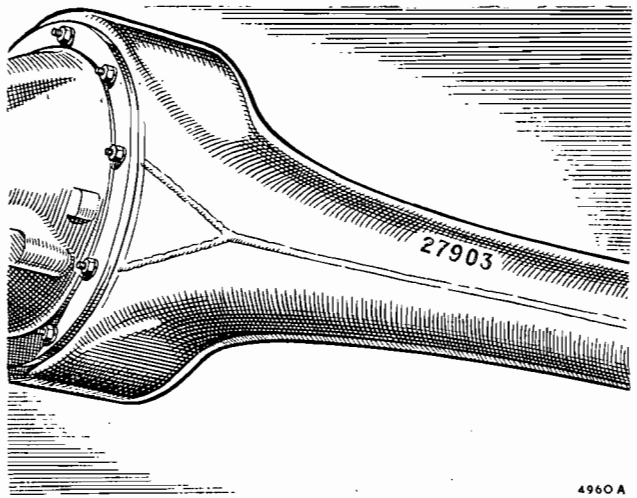

The **Rear Axle Number** is stamped on the front of the left-hand rear axle tube

Introduction

The range of parts in this List covers all serviceable components on all models to the standard specifications. Where the part is confined to one specification this is clearly defined in the 'Quantity' and or 'Remarks' column, and where the part listed is not serviced this is indicated by the letters N.S.P. in the 'Part Number' column.

The components in the plate illustrations are identified by numbers which correspond with the illustration reference appearing on the facing page in the column immediately following the part number.

It is essential first to identify the part against the illustration in the appropriate section of the List and make use of the illustration reference number to locate the part number and official description on the adjacent page.

When using the List it must be noted that each assembly (or sub-assembly) is shown as the **first item** and followed immediately by the individual components of the assembly, which are 'offset' for easy identification. It must be clearly understood that such assemblies (or sub-assemblies) will only be supplied complete with all their components when ordered against the assembly (or sub-assembly) part number. It will be appreciated, however, that the individual components of the assembly (which are listed immediately below and offset) can themselves be supplied separately, provided they are ordered against their individual part numbers. Note that the quantities shown are the quantity per vehicle, and not the quantity per component.

Example:

CONNECTING RODS—BEARINGS

Connecting rod and cap for Nos. 1 and 3 cylinders	**1G2370**	**2**
Connecting rod and cap for Nos. 2 and 4 cylinders	**1G2367**	**2**
Screw for cap	51K1388	8
Washer for screw (lock)	6K881	4

We reserve the right to make changes or improvements in the construction or equipment of our products at any time. It is our general policy, however, to supply components to the latest specification.

Where a modification has taken place to a part, or a new part issued replacing the original part, this is indicated by the inclusion of the new part number under 'Modifications'.

Owner's Guide for Ordering Parts

Obtain your parts from the local B.M.C. Distributor or Dealer, who stocks only B.M.C. genuine and warranted parts.

(1) In order to ensure prompt and correct execution of orders it is essential that the following instructions are adhered to:
- (*a*) Always state the **vehicle/chassis** and **engine numbers** complete with prefixes and suffixes (see page iii).
- (*b*) Always **state the colour** of carpets, painted items, trim items, etc.
- (*c*) Give **part numbers** and **description** (prefix letters to part numbers must always be quoted).
- (*d*) **Quantity required,** bearing in mind that the quantities shown are the quantity per vehicle.
- (*e*) **If ordering for dispatch give definite forwarding instructions,** i.e. sea, air freight, air parcel service, post, passenger/goods train, road service, or collection.

(2) When cabling or telegraphing the local Distributor or Dealer use the part number and give the **vehicle chassis/number. Confirm your cable or telegram by letter, or order,** at once. Give sufficient postal address for a parcel to find you. If you are away from home give **your home address in addition** to the dispatching instructions. Remember when sending a telegraphic order that **your name and address must be telegraphed as a message.** If this is not done the order will arrive without any indication of the sender's address, as your signature and address on the back of the telegram form is not telegraphed. Always write the quantity required of any particular part in words.

(3) **Claims under Warranty**

Claims for the replacement of material or parts under Warranty must always be submitted to the supplying Distributor or Dealer, or, when this is not possible, to the nearest Distributor or Dealer, informing them of the vendor's name and address.

(4) **Replacement Unit Schemes**

Where service replacement units are available this is clearly indicated by a bold letter (**R**) against the item at the end of the 'Description' line. Details of these and the terms and method of replacement are published in the local press and trade periodicals. You are advised to consult the local Distributor or Dealer for full details.

Instructions to Dealers

Modifications will be covered by the issue of Parts Amendment Sheets as required and also by the periodical reissue of the Part Number Index. Each issue of this Index is identifiable by its issue number and supersedes the previous issue, which should be destroyed. This Part Number Index should be kept with this List, for which purpose it is suitably punched.

In practice, first identify the items with the aid of the appropriate illustration. This provides a reference to the part number and official description appearing on the facing page. Now turn up the part number in the Part Number Index. Any modification will be indicated by the Parts Amendment Sheet number appearing in the adjacent column, and reference to this will provide the information necessary to ensure the issue of the correct part. If no Amendment Sheet number is indicated against the part number in the Part Number Index the part is clear for issue.

New parts introduced subsequent to the printing of this Parts List may be traced with the aid of the separate Index to Improvements and Alterations. They will be included in the Part Number Index as this is reissued and appropriately cross-referenced.

Certain classes of items are stocked and issued in **cartons, packets, etc., only,** and these are indicated in the Parts List by a figure in the 'Unit of Issue' column showing the quantity per package.

It is most important that orders should quote quite clearly the number of **packets** required, the word 'packets' (or the abbreviation 'pkt.') being used in every case.

If the word 'packet' is not used confusion may arise concerning the quantity actually required, with consequent delay in order handling.

While the quantity of units per pack indicated in the 'Unit of Issue' column in this Parts List provides a ready guide, it is always advisable to check the latest information regarding items in this category by referring to the Master Price List.

In addition a number of prices in the Price List are shown for a dozen (i.e. the abbreviation 'doz.' appears between the part number and the price), in which case the item is sold in 'dozens' only, and units of one dozen must be ordered, quoting the word 'dozen' or the abbreviation 'doz.'; thus, should 48 be required, the order should state clearly '4 doz.'. Again, confusion can result if this is not done and over- or under-issue may occur.

NOTE.—Oversize and undersize replacement parts are tabulated at the end of the engine section.

The following abbreviations are used:

Not U.K. indicates 'Export only'.
RHD indicates 'Right-hand drive'.
LHD indicates 'Left-hand drive'.
R/H indicates 'Right-handed'.
L/H indicates 'Left-handed'.
R.H.T. indicates 'Right-hand thread'.
L.H.T. indicates 'Left-hand thread'.
N.S.P. indicates 'Non-serviceable part'.
R at the end of the description indicates that reconditioned units are available under the B.M.C. Exchange Parts Service.

Where commencing and finishing numbers are quoted they are preceded by the following symbols to indicate the unit to which they apply:

(E) in the case of engine numbers.
(C) in the case of car/chassis numbers.
(G) in the case of gearbox numbers.
(FA) in the case of front axle numbers.
(RA) in the case of rear axle numbers.
(B) in the case of body numbers.

Bundy pipes are supplied completely finished and to the correct length but not shaped. They may be delivered straight or coiled according to their length and mode of delivery.

S.U. carburetter needles are supplied under the one part number AJH5292 and the individual needles are identified by the letter symbols stamped on the shoulder. When ordering replacement needles it is essential to quote the identification symbol in addition to and immediately following the part number.

IMPORTANT

B.M.C. SERVICE PARTS

When purchasing replacement parts or having repairs done owners are requested to see that a label similar to the one illustrated here is attached to the invoice rendered. These labels are issued by the Company and constitute a guarantee that genuine parts are supplied.

No better vehicle maintenance service exists in the world than that provided by the manufacturers and no vehicle demands less attention, but it is unfair to the manufacturers to expect the continuance of their support if the structure of the vehicle has been disturbed by the use of replacements that are not genuine B.M.C. parts.

Replacement parts that are not of genuine B.M.C. manufacture cannot be relied upon to be of B.M.C. specification, material, and workmanship, and therefore the manufacturers cannot be expected to extend their Warranty to vehicles which have been fitted with parts not of their manufacture.

All Authorized B.M.C. Distributors and Dealers are under contract to supply only genuine B.M.C. parts.

Alphabetical Index

A

	Page
Absorber—front	K.3
Absorber—rear	L.1
Accelerator cable	A.19
Accelerator control	A.19
Accelerator pedal	A.19
Adaptor—master cylinder	M.2
Adaptor—oil filter	A.10
Adjustable steering-column	J.4
Adjuster—mask	H.4
Adjuster nut—brake cable	M.4
Air cleaner	D.7
Anti-roll bar assembly	K.4
Arm and blade—wiper	N.9
Ashtray	R.40
Attachment—tank	D.3
Axle—rear	H.1

B

Backlight	R.12
Badge bar	R.40
Badge—radiator	C.1
Barrel lock	N.3, R.10, R.14
Battery—wet	N.1
Bearing—bevel pinion	H.1
Bearing—clutch	E.1
Bearing—connecting rod	A.3
Bearing—differential	H.1
Bearing—front hub	K.1
Bearing—main	A.1, A.13
Bearing—pinion tail	J.1
Bearing—rear hub	H.2
Belt—fan	A.12
Bezel—radio aperture	O.1
Blind—radiator	R.41
Body mounting details	Q.2
Body shell—Coupé	R.5
Body shell—Tourer	R.1
Bolt—clutch lever	F.4
Bonnet lid	R.1, R.5
Boot lid	R.1, R.5
Boot—socket assembly	J.2
Bootee—starter switch	N.3
Bracket—accelerator return spring	A.19
Bracket—bumper support	Q.1
Bracket—horn-push	O.1
Bracket—rear shock absorber	H.5
Bracket—steering-column	J.3
Brake controls	M.1
Brake—front	K.2
Brake pedal	M.1
Brake—rear	H.4
Buffer—bonnet lid	R.17
Bumper rubber—rear spring	H.5
Bumpers and fittings	R.20
Bush—bottom wishbone	K.3
Bush—hand brake	M.4
Bush—rear engine mounting	A.17
Bush—rocker	A.5
Bush—rubber—rear spring	H.5

C

Cable—accelerator	A.19
Cable—choke	A.21
Cable—hand brake	M.4
Cable—harness	N.10
Cable—revolution counter	O.2
Cable—speedometer	O.2
Cable—starter	A.21
Camshaft	A.3
Canopy assembly	R.38
Cap—radiator	C.1
Carburetter	D.4
Carpets	R.33, R.37
Carrier and differential	H.1
Carrier—luggage	R.41
Catch and control—bonnet	R.17
Chain—camshaft timing	A.3
Chain tensioner	A.3
Change speed lever	F.5
Chassis frame	Q.1
Check rubber	K.3
Choke control	A.21
Cigar-lighter	R.40
Clamp—accelerator cable	A.19
Clamp—battery	N.1
Cleaner—air	D.7
Clip—air intake hose	D.7
Clip—brake pipes	M.3
Clip—oil gauge pipe	O.3
Clip—petrol pipe	D.3
Clip—rack seal	J.1
Clip—thermometer pipe	O.3
Clutch assembly	E.1
Coil—ignition	B.1
Cold air ventilation kit	R.43
Column—steering	J.2
Connecting rods	A.3
Control box	N.4
Cooling system	C.1
Cover—clutch assembly	E.1
Cover—gearbox assembly	R.9
Cover—gearbox front	F.1
Cover—hub	P.1
Cover—rocker	A.6
Cover—spare wheel	R.31
Cover—steering-wheel	J.3
Cover—tonneau	R.38
Crankshaft	A.3
Cross-shaft—accelerator	A.19
Crown wheel and pinion	H.1
Cup—piston	M.2
Curtain stowage	R.31
Cushion—seat	R.22
Cylinder front side covers	A.7
Cylinder head	A.5
Cylinder—master	M.2
Cylinder—wheel	H.4, K.2

D

Demister fittings	R.40
Dipper rod—engine	A.10
Dipper switch	N.3
Dipstick—gearbox	F.1
Distributor	B.1
Door assembly	R.2, R.6
Door fittings	R.14
Door sealing rubber	R.32
Draught excluder—gear lever	F.5
Dripway—door opening	R.6
Drum—brake—front	K.2
Drum—brake—rear	H.3
Dynamo	N.1

Alphabetical Index—*continued*

E

	Page
Element—oil filter	A.9
Engine	A.1
Engine service kits	A.14
Exhaust system	A.18
Extension—gearbox	F.1

F

	Page
Fan blade assembly	A.12
Fan—dynamo	A.12
Fascia panel	O.1, O.4, R.35
Felts	R.33
Filler cap—radiator	C.1
Filter—oil	A.9
Finishers—pillar	R.32
Flasher unit	N.8
Flexible bush—rear engine mounting	A.17
Floorboards	R.9
Floor fittings—boot	R.10
Flywheel	A.4
Foglamp	N.6
Fork—reverse	F.2
Front brake	K.2
Front cover	F.1
Front end—body panels	R.1, R.5
Front extension—chassis	Q.1
Front suspension	K.1
Fume excluder—pedals	M.1
Fusebox	N.4

G

	Page
'G'—trunk lid	R.11
Gaskets	A.14
Gauge—fuel	O.3
Gauge—oil and temperature	O.3
Gear—camshaft	A.3
Gear—speedometer drive	F.3
Gearbox	F.1
Glass—windscreen	R.12
Grab handle	R.12
Grille assembly—radiator	C.1
Grille—radio speaker	O.1
Grommets—dash bulkhead	R.40
Gudgeon pin	A.2, A.13
Guide—accelerator cable	A.19
Guide—valve	A.5

H

	Page
Hammer—copper	S.1
Hand brake mechanism	M.4
Hard top assembly	R.39
Harness cables	N.10
Head—cylinder	A.5
Heat shield—carburetter	D.6
Heating and ventilating equipment	R.42
Hinges—bonnet lid	R.17
Hinges—door	R.2, R.6
Hinges—trunk lid	R.10
Hood assembly	R.38
Horn	N.8
Horn bracket	N.8
Horn-push	O.1
Hose—air intake	D.7
Hose—brake	M.3
Hose—petrol tank	D.3
Hose—radiator	C.1
Hub assembly—front	K.1
Hub assembly—rear	H.2, H.3
Hub caps	P.1
Hub extension—rear	H.3
Hydraulic pipes and fittings	M.3

I

	Page
Ignition coil	B.1

J

	Page
Joints	A.14
Journal assembly	G.1

K

	Page
Knob—change speed lever	F.5
Knob—switch	N.3

L

	Page
Lamp—fog	N.6
Lamps	N.5
Layshaft	F.4
Leaf—rear spring	H.5
Lever—change speed	F.5
Lever—clutch withdrawal	F.4
Lever—flasher switch	N.3
Lever—hand brake	M.4
Licence holder	R.40
Lid—bonnet	R.1, R.5
Lid—boot	R.1, R.5
Liner assemblies	R.30, R.35
Lining—shoe	H.4
Link—swivel pin	K.1
Literature	S.5
Locating plate—camshaft	A.3
Lock assembly—door	R.14
Lock—boot lid	R.10
Locknut—rear axle	H.1
Luggage carrier	R.41

M

	Page
'M'—trunk lid	R.11
Manifolds	A.16
Master cylinder	M.2
Master cylinder box	M.1
'MGA' ventilator grille—air duct	R.40
'M.G.' motif—fascia panel	O.1
Mirror—rear view	R.40
Mirror—wing	R.41
Mounting—distributor	A.4
Mounting—dynamo	A.12
Mounting—engine	A.17
Mounting—exhaust	A.18
Mounting—gearbox	A.17
Motor—wiper	N.9

N

	Page
Number-plates and fittings	R.19
Nut—cylinder head	A.6
Nut—steering-wheel	J.3

O

	Page
Oil drain plug	A.10
Oil filter	A.9
Oil pump	A.8
Oil reservoir	A.10

Alphabetical Index—*continued*

	Page
Oil seal—hub	H.2
Operating lever—hand brake	M.4
Operation Manual	S.5
Over—rider	R.20

P

Pad—pedal rubber	A.19, E.2
Pad—rubber—accelerator pedal	A.19
Paint	S.2
Pedal—accelerator	A.19
Pedal—brake	L.1
Pedal—clutch	E.2
Pinion—speedometer drive	F.3
Pinion—steering	J.1
Pipe—air filter	D.7
Pipe—fuel	D.3
Pipe assembly—oil filter	A.10
Pipe assembly—oil gauge	O.3
Pipe assembly—vacuum ignition	B.2
Pipe—radiator	C.1
Pipes—hydraulic brake	M.3
Piping—fascia panel	O.1
Piping—radiator grille	C.1
Piston assembly	A.2, A.13
Plate—brake	H.4, K.2
Plinth—tail lamp	N.6
Plug—brake-drum	H.3, K.2
Plug—oil drain	A.10
Plug—rear axle oil	H.1
Plugs—sparking	A.6
Power unit	A.1–A.12
Propeller shaft	G.1
Pulley—crankshaft	A.3
Pulley—dynamo	A.12
Pulley—water pump	A.11
Pump—fuel	D.1
Pump—oil	A.8
Pump—water	A.11
Push-rod	A.4

R

Rack and pinion—steering	J.1
Radiator	C.1
Radiator blind	R.41
Rear ramp	R.9
Rear spring	H.5
Rebound strap	H.5
Relay unit	N.8
Remote control	F.5
Remote control shaft	F.5
Reservoir—oil	A.10
Reverse fork	F.2
Reverse gear	F.4
Revolution counter	O.2
Rimbellisher—wheel	P.1
Ring—piston	A.2, A.13
Ring—starter	A.4
Rocker cover	A.6
Rocker shaft	A.5
Rod—bonnet lid support	R.17
Roof assembly	R.6
Rubber pad—pedal	A.19, E.2

S

Seal—rack	J.1
Seal—steering-column	J.3
Seal—swivel pin	K.1
Seat and seat fittings	R.22
Shackle plate	H.5
Shaft—propeller	G.1
Shaft—rear axle	H.2, H.3
Shaft—remote control	F.5
Shaft—valve rocker	A.5
Shock absorber—front	K.3
Shock absorber—rear	L.1
Shoe—brake	H.4, K.2
Side-curtains	R.15
Sidescreens—sliding	R.39
Silencer—exhaust	A.18
Spanners	S.1
Spare wheel cover	R.31
Sparking plugs	A.6
Speedometer	O.2
Spring—change speed lever	F.5
Spring—coil	K.3
Spring—hand brake cable	M.4
Spring pan assembly	K.3
Spring—piston return	M.2
Spring—rear	H.5
Spring—valve	A.5
Starter	N.2
Starter control	A.21
Starter ring	A.4
Starting handle	S.1
Steering	J.1
Steering-column	J.2
Steering-column—adjustable	J.4
Steering knuckle	K.1
Steering lever	K.1
Steering-wheel	J.3
Stowage—curtain	R.31
Strap—petrol tank	D.3
Strap—rebound	H.5
Stud—manifold	A.16
Sundries	R.40
Switches—electrical	N.3
Swivel pin	K.1

T

Tab washer—rear axle	H.1
Tachometer drive	A.4
Tank attachment	D.3
Tank—fuel	D.3
Tap—radiator drain	C.1
Tap—water drain	A.7
Tappets	A.4
Tensioner—chain	A.3
Tensioner ring	A.3
Thermostat	A.6
Tie-rod—steering	J.1
Tipon paint pencil	S.2
Tonneau assembly	R.1, R.5
Tonneau cover	R.38
Tool kit	S.1
Tools—special	S.3
Touring kit	A.15
Tower—remote control	F.5
Trimming	R.29
Tunnel—propeller shaft	R.9

Alphabetical Index—*continued*

U

	Page
'U' clip—rear spring	H.5
Underfelt—carpet	R.33
Universal joint—steering-column	J.2

V

Vacuum control pipe	B.2
Valve—cylinder head	A.5
Valve tappets	A.4
Ventilation—cold air kit	R.43
Ventilation grille—air duct	R.40
Ventilator assembly—window	R.15
Visor—sun	R.41

W

	Page
Washer—windscreen	R.13
Water outlet elbow	A.6
Water pump	A.11
Wheelbrace	S.1
Wheel cylinder	H.4, K.2
Wheel—knock-on	P.1
Wheel—road	P.1
Wheel—steering	J.3
Wheel—wire	P.1
Windows—side	R.15
Windscreen assembly	R.12
Windscreen washer	R.13
Windscreen wiper details	N.9
Wing mirror	R.41
Wings	R.2, R.6
Wishbone assembly	K.3
Wishbone pivot	K.3

Y

Yoke—manifold	A.16
Yoke—sleeve assembly	G.1

Part Number Index

The following is a complete index of parts in this List, giving the page reference of each part number

Part Number	Page	Amdt. Number
1A1546	A.3	
1A1964	F.3	
1A2028	A.3	
1A2032	A.3	
1A2064	A.11	
1A2065	A.11	
1A2066	A.11	
1A2068	A.11	
1A2093	A.7	
1A2139	A.5	
1A2149	A.6	
1A2156	A.6	
1A2198	A.7	
1A2203	A.7	
1A2206	A.9	
1A3717	F.3	
2A128	A.12	
2A139	A.4	
2A150	A.6	
2A258	A.5	
2A259	A.5	
2A412	A.12	
2A457	A.11	
2A459	B.2	
2A497	A.12	
2A552	A.7	
2A758	A.12	
2A759	A.3	
2A770	A.7	
2A778	A.11	
2A847	A.4	
2A3141	F.2	
2A3254	F.3	
2A3255	F.3	
2A3256	F.3	
2A7213	H.1	
2A7226	H.1	
12A29	A.6	
12A109	A.6	
14A366	R.1	
14A366	R.5	
14A1468	F.5	
14A3823	R.40	
14A5753	R.43	
ACA4010	K.1	
ACA5000	H.5	
ACA5118	J.1	
ACA5127	D.3	
ACA5216	S.1	
ACA5217	S.1	
ACA5218	S.1	
ACA5221	P.1	
ACA5244	J.1	
ACA5245	J.1	
ACA5246	J.1	
ACA5247	J.1	
ACA5248	J.1	
ACA5249	J.1	
ACA5283	J.1	
ACA5284	J.1	
ACA5285	J.1	
ACA5286	J.1	
ACA5290	D.7	
ACA5300	R.9	
ACA5301	J.1	
ACA5302	J.1	
ACA5304	J.1	
ACA5308	P.1	
ACA5321	A.19	
ACA5374	R.9	
ACA6004	J.2	
ACA6030	J.1	
ACA6031	J.1	
ACB5255	K.3	
ACB5468	D.3	
ACB8474	N.3	
ACB8474	O.2	
ACB8715	M.4	
ACC5292	N.5	
ACC6042	J.4	
ACC8788	O.2	
ACC8956	M.4	
ACF4000	K.1	
ACF4001	K.1	
ACF4002	K.1	
ACF4003	K.1	
ACF4004	K.1	
ACG4030	K.1	
ACG5001	H.5	
ACG5002	H.5	
ACG5147	D.2	
ACG5179	N.6	
ACG5180	N.6	
ACG5184	D.7	
ACG5247	S.1	
ACG5283	S.1	
ACG6005	K.1	
ACG8000	P.1	
ACH5031	C.1	
ACH5032	C.1	
ACH5101	M.4	
ACH5104	M.4	
ACH5112	A.20	
ACH5236	S.1	
ACH5245	S.1	
ACH5305	M.3	
ACH5457	E.2	
ACH5490	S.1	
ACH5701	N.5	
ACH5703	H.3	
ACH5703	K.2	
ACH5704	H.3	
ACH5704	K.2	
ACH5780	D.3	
ACH5781	D.3	
ACH5835	R.19	
ACH5850	D.3	
ACH6001	J.3	
ACH6168	J.2	
ACH6170	J.2	
ACH6173	J.2	
ACH8004	P.1	
ACH8304	P.1	
ACH8483	E.2	
ACH8508	M.4	
ACH8529	O.2	
ACH8650	M.3	
ACH8977	D.3	
ACH8979	N.10	
ADA458	R.18	
ADA461	R.17	
ADA463	R.17	
ADA464	R.17	
ADA466	R.17	
ADA833	O.1	
ADA2463	R.17	
ADB509	O.1	
ADB709	R.14	
ADB709	R.16	
ADB826	N.9	
ADC560	N.9	
ADC2781	R.18	
ADE539	R.33	
ADE1533	S.3	
ADE1557	S.3	
ADE1558	S.3	
ADE1559	S.3	
ADE1560	S.3	
ADE1562	S.3	
ADE1654	S.3	
ADG474	R.19	
ADG1517	N.8	
ADH456	R.17	
ADH785	N.6	
ADH2475	R.11	
ADH2476	R.11	
ADH2611	N.10	
ADH3809	R.40	
ADH4869	R.18	
ADH5481	R.16	
ADH5482	R.14	
AEC339	A.3	
AEC340	A.3	
AEC388	B.2	
AEG111	A.16	
AEG129	A.12	
AEG3001	F.5	
AEG3101	F.5	
AEG3105	F.5	
AEG3106	F.5	
AEG3108	F.1	
AEG3112	F.5	
AEG3113	F.5	

Part Number Index—*continued*

Part Number	Page	Amdt. Number
AEG3114	F.5	
AEG3115	F.5	
AEG3116	F.5	
AEG3117	F.5	
AEG3118	F.5	
AEG3119	F.5	
AEG3120	F.5	
AEG3122	F.5	
AEG3123	F.5	
AEG3124	F.5	
AEH174	A.16	
AEH194	A.16	
AEH195	A.16	
AEH281	A.16	
AEH550	D.6	
AEH551	A.16	
AEH551	D.6	
AEH3242	F.3	
AEK113	A.5	
AEK122	C.1	
AEK123	C.1	
AFB776	R.36	
AFH872	R.1	
AFH873	R.1	
AFH898	R.2	
AFH899	R.2	
AFH900	R.1	
AFH900	R.5	
AFH1464	R.2	
AFH1464	R.6	
AFH1494	R.2	
AFH1494	R.6	
AFH1502	R.1	
AFH1502	R.5	
AFH1503	R.1	
AFH1503	R.5	
AFH1514	R.10	
AFH1514	R.17	
AFH1515	R.10	
AFH1515	R.17	
AFH1516	R.10	
AFH1519	R.10	
AFH1520	R.1	
AFH1521	R.1	
AFH1524	R.1	
AFH1524	R.5	
AFH1527	R.1	
AFH1527	R.5	
AFH1577	R.1	
AFH1577	R.5	
AFH1578	R.10	
AFH1579	R.1	
AFH1585	R.1	
AFH1620	R.2	
AFH1621	R.2	
AFH1624	R.2	
AFH1625	R.2	
AFH1626	R.2	
AFH1627	R.2	
AFH1654	R.17	
AFH1655	R.17	
AFH1656	R.2	
AFH1656	R.6	
AFH1657	R.2	
AFH1657	R.6	
AFH1658	R.2	
AFH1658	R.6	
AFH1659	R.2	
AFH1659	R.6	
AFH1663	R.1	
AFH1663	R.5	
AFH1666	R.2	
AFH1667	R.2	
AFH1675	R.17	
AFH1682	R.14	
AFH1683	R.14	
AFH1684	R.14	
AFH1685	R.14	
AFH1687	R.12	
AFH1690	R.2	
AFH1691	R.2	
AFH1692	R.2	
AFH1692	R.7	
AFH1693	R.2	
AFH1693	R.7	
AFH1700	R.3	
AFH1700	R.8	
AFH1702	R.4	
AFH1702	R.8	
AFH1703	R.4	
AFH1703	R.8	
AFH1704	R.3	
AFH1704	R.8	
AFH1705	R.3	
AFH1705	R.8	
AFH1710	R.3	
AFH1710	R.8	
AFH1711	R.3	
AFH1711	R.8	
AFH1712	O.1	
AFH1713	O.1	
AFH1716	R.12	
AFH1717	R.12	
AFH1718	R.12	
AFH1719	R.12	
AFH1720	R.12	
AFH1721	R.12	
AFH1722	R.12	
AFH1723	R.12	
AFH1724	R.12	
AFH1726	R.12	
AFH1731	R.31	
AFH1731	R.36	
AFH1739	R.18	
AFH1740	R.38	
AFH1741	R.38	
AFH1742	R.15	
AFH1743	R.15	
AFH1744	R.32	
AFH1746	R.38	
AFH1747	R.10	
AFH1748	R.40	
AFH1749	R.40	
AFH1753	R.10	
AFH1754	R.1	
AFH1755	R.17	
AFH1756	R.10	
AFH1757	R.17	
AFH1758	R.10	
AFH1759	R.10	
AFH1767	R.1	
AFH1767	R.5	
AFH1768	R.2	
AFH1769	R.2	
AFH1787	R.12	
AFH1789	R.10	
AFH1794	R.1	
AFH1794	R.5	
AFH1831	R.32	
AFH1832	R.32	
AFH1833	R.32	
AFH1834	R.32	
AFH1837	O.1	
AFH1838	O.1	
AFH1839	O.1	
AFH1840	O.1	
AFH1846	R.31	
AFH1847	R.33	
AFH1847	R.37	
AFH1848	R.33	
AFH1848	R.37	
AFH1849	R.33	
AFH1849	R.37	
AFH1850	R.33	
AFH1851	R.33	
AFH1854	R.33	
AFH1855	R.33	
AFH1856	R.33	
AFH1857	R.33	
AFH1860	R.33	
AFH1862	R.33	
AFH1863	R.33	
AFH1864	R.33	
AFH1865	R.33	
AFH1866	R.33	
AFH1867	R.33	
AFH1868	R.33	
AFH1869	R.33	
AFH1870	R.1	
AFH1871	R.1	
AFH1874	R.1	
AFH1874	R.5	
AFH1896	R.1	
AFH1896	R.5	
AFH1899	R.2	
AFH1900	R.31	
AFH1900	R.36	
AFH2451	R.32	
AFH2452	R.32	
AFH2453	R.32	
AFH2455	R.32	
AFH2456	R.22	
AFH2457	R.23	
AFH2458	R.22	
AFH2459	R.24	
AFH2462	R.1	
AFH2462	R.5	
AFH2468	R.33	
AFH2469	R.33	
AFH2472	R.33	
AFH2473	R.33	
AFH2474	R.33	
AFH2476	R.33	
AFH2477	R.33	
AFH2477	R.37	
AFH2478	R.33	
AFH2478	R.37	
AFH2479	R.33	
AFH2479	R.37	
AFH2480	R.33	
AFH2480	R.37	
AFH2481	R.33	
AFH2481	R.37	
AFH2546	R.3	

Part Number Index—*continued*

Part Number	Page	Amdt. Number
AFH2546	R.4	
AFH2546	R.5	
AFH2546	R.7	
AFH2547	R.12	
AFH2555	R.29	
AFH2556	R.29	
AFH2557	R.29	
AFH2558	R.29	
AFH2559	R.30	
AFH2560	R.30	
AFH2561	R.30	
AFH2562	R.30	
AFH2563	R.30	
AFH2564	R.30	
AFH2565	R.30	
AFH2566	R.29	
AFH2567	R.30	
AFH2567	R.36	
AFH2568	R.30	
AFH2569	R.30	
AFH2570	R.31	
AFH2571	R.31	
AFH2572	R.31	
AFH2572	R.36	
AFH2574	R.32	
AFH2575	R.32	
AFH2576	R.32	
AFH2577	R.32	
AFH2579	R.32	
AFH2587	R.1	
AFH2587	R.3	
AFH2587	R.4	
AFH2587	R.5	
AFH2587	R.7	
AFH2587	R.10	
AFH2587	R.17	
AFH2587	R.40	
AFH2609	R.31	
AFH2610	R.23	
AFH2611	R.24	
AFH2612	R.22	
AFH2613	R.23	
AFH2614	R.22	
AFH2615	R.23	
AFH2622	R.10	
AFH2624	R.2	
AFH2624	R.6	
AFH2625	R.2	
AFH2625	R.6	
AFH2627	R.3	
AFH2627	R.7	
AFH2629	R.38	
AFH2630	R.12	
AFH2631	R.12	
AFH2635	R.38	
AFH2659	R.38	
AFH2660	R.15	
AFH2661	R.15	
AFH2662	R.15	
AFH2663	R.15	
AFH2664	R.15	
AFH2666	R.15	
AFH2677	R.15	
AFH2680	R.15	
AFH2685	R.1	
AFH2686	R.1	
AFH2687	R.38	
AFH2700	R.1	
AFH2701	R.1	
AFH2722	R.36	
AFH2723	R.36	
AFH2726	R.38	
AFH2727	R.38	
AFH2805	R.2	
AFH2805	R.6	
AFH2809	R.12	
AFH2819	R.31	
AFH2820	R.31	
AFH2821	R.31	
AFH2868	R.12	
AFH3740	R.29	
AFH3741	R.29	
AFH3742	R.29	
AFH3743	R.29	
AFH3744	R.29	
AFH3745	R.30	
AFH3752	R.2	
AFH3752	R.6	
AFH3753	R.2	
AFH3753	R.6	
AFH3778	R.12	
AFH3780	R.6	
AFH3781	R.6	
AFH3786	R.6	
AFH3787	R.6	
AFH3792	R.14	
AFH3796	R.14	
AFH3800	R.1	
AFH3801	R.1	
AFH3802	R.15	
AFH3803	R.15	
AFH3820	R.5	
AFH3830	R.12	
AFH3831	R.12	
AFH3832	R.12	
AFH3833	R.12	
AFH3834	R.12	
AFH3835	R.12	
AFH3836	R.12	
AFH3837	R.12	
AFH3838	R.12	
AFH3839	R.12	
AFH3840	R.3	
AFH3840	R.7	
AFH3866	R.5	
AFH3867	R.5	
AFH3878	R.5	
AFH3879	R.5	
AFH3880	R.5	
AFH3881	R.5	
AFH3882	R.6	
AFH3883	R.6	
AFH3884	R.6	
AFH3885	R.6	
AFH3893	R.14	
AFH3894	R.14	
AFH3895	R.14	
AFH3896	R.14	
AFH3897	R.14	
AFH3898	R.16	
AFH3899	R.16	
AFH3900	R.16	
AFH4453	R.16	
AFH4454	R.16	
AFH4455	R.16	
AFH4456	R.16	
AFH4458	R.16	
AFH4459	R.16	
AFH4464	R.6	
AFH4465	R.6	
AFH4466	R.6	
AFH4467	R.6	
AFH4478	R.7	
AFH4479	R.7	
AFH4480	R.7	
AFH4481	R.7	
AFH4482	R.6	
AFH4483	R.6	
AFH4485	R.37	
AFH4486	R.37	
AFH4487	R.37	
AFH4488	O.4	
AFH4489	O.4	
AFH4512	R.36	
AFH4513	R.14	
AFH4514	O.4	
AFH4515	O.4	
AFH4520	O.4	
AFH4562	R.36	
AFH4563	R.36	
AFH4564	R.36	
AFH4565	R.36	
AFH4568	R.16	
AFH4569	R.16	
AFH4631	R.34	
AFH4632	R.24	
AFH4633	R.25	
AFH4634	R.25	
AFH4635	R.26	
AFH4636	R.24	
AFH4637	R.26	
AFH4638	R.25	
AFH4639	R.26	
AFH4640	R.25	
AFH4641	R.26	
AFH4642	R.35	
AFH4643	R.35	
AFH4644	R.35	
AFH4645	R.35	
AFH4646	R.36	
AFH4647	R.36	
AFH4648	R.34	
AFH4649	R.34	
AFH4650	R.34	
AFH4651	R.34	
AFH4652	R.34	
AFH4653	R.35	
AFH4654	R.35	
AFH4655	R.35	
AFH4656	R.35	
AFH4657	R.37	
AFH4658	R.35	
AFH4659	R.35	
AFH4660	R.34	
AFH4661	R.37	
AFH4748	R.6	
AFH4760	R.37	
AFH4761	R.37	
AFH4764	R.37	
AFH4765	R.37	
AFH4766	R.37	
AFH4767	R.37	
AFH4771	R.36	
AFH4772	R.36	
AFH4773	R.36	
AFH4774	R.36	
AFH4782	R.3	
AFH4782	R.7	

Part Number Index—*continued*

Part Number	Page	Amdt. Number
AFH4783	R.3	
AFH4783	R.7	
AFH4784	R.3	
AFH4784	R.7	
AFH4785	R.3	
AFH4785	R.7	
AFH4806	R.6	
AFH4807	R.6	
AFH4819	R.36	
AFH4822	R.36	
AFH4823	R.36	
AFH4835	R.31	
AFH4835	R.36	
AFH4836	R.31	
AFH4836	R.36	
AFH4837	R.31	
AFH4837	R.36	
AFH4838	R.31	
AFH4838	R.36	
AFH4839	R.36	
AFH4840	R.36	
AFH4841	O.1	
AFH4841	O.4	
AFH4842	O.1	
AFH4842	O.4	
AFH4843	O.1	
AFH4843	O.4	
AFH4844	O.1	
AFH4844	O.4	
AFH4845	O.4	
AFH4846	O.4	
AFH4847	R.15	
AFH4848	R.15	
AFH4849	R.15	
AFH4858	R.15	
AFH4859	R.15	
AFH4860	R.15	
AFH4861	R.15	
AFH4862	R.15	
AFH4863	R.15	
AFH4864	R.15	
AFH4865	R.15	
AFH4866	R.16	
AFH4867	R.16	
AFH4868	R.16	
AFH4869	R.16	
AFH4870	R.16	
AFH4871	R.16	
AFH4872	R.15	
AFH4873	R.15	
AFH4874	R.15	
AFH4875	R.15	
AFH4876	R.15	
AFH4877	R.15	
AFH4878	R.15	
AFH4879	R.1	
AFH4879	R.5	
AFH4880	R.1	
AFH4880	R.5	
AFH4894	R.1	
AFH4895	R.1	
AFH4896	R.5	
AFH4897	R.5	
AFH5424	R.24	
AFH5425	R.26	
AFH5452	R.31	
AFH5452	R.36	
AFH5453	O.3	
AFH5453	R.6	
AFH5478	R.27	
AFH5479	R.27	
AFH5484	R.1	
AFH5485	R.5	
AFH5490	R.24	
AFH5491	R.25	
AFH5492	R.24	
AFH5493	R.25	
AFH5494	R.24	
AFH5495	R.25	
AFH5496	R.24	
AFH5497	R.25	
AFH5498	R.24	
AFH5499	R.25	
AFH5500	R.24	
AFH5501	R.25	
AFH5502	R.25	
AFH5503	R.26	
AFH5504	R.25	
AFH5505	R.26	
AFH5506	R.25	
AFH5507	R.26	
AFH5508	R.25	
AFH5509	R.26	
AFH5510	R.25	
AFH5511	R.26	
AFH5512	R.25	
AFH5513	R.26	
AFH5514	R.24	
AFH5515	R.26	
AFH5516	R.24	
AFH5517	R.26	
AFH5518	R.24	
AFH5519	R.26	
AFH5520	R.24	
AFH5521	R.26	
AFH5522	R.24	
AFH5523	R.26	
AFH5526	R.25	
AFH5527	R.26	
AFH5528	R.25	
AFH5529	R.26	
AFH5530	R.25	
AFH5531	R.26	
AFH5532	R.25	
AFH5533	R.26	
AFH5534	R.25	
AFH5535	R.26	
AFH5536	R.25	
AFH5537	R.26	
AFH5538	R.25	
AFH5539	R.26	
AFH5540	R.25	
AFH5541	R.26	
AFH5542	R.25	
AFH5543	R.26	
AFH5544	R.25	
AFH5545	R.26	
AFH5546	R.25	
AFH5547	R.26	
AFH5548	R.25	
AFH5549	R.26	
AFH5550	R.34	
AFH5551	R.34	
AFH5552	R.34	
AFH5553	R.34	
AFH5554	R.34	
AFH5555	R.34	
AFH5556	R.34	
AFH5557	R.34	
AFH5558	R.34	
AFH5559	R.34	
AFH5560	R.34	
AFH5562	R.35	
AFH5563	R.35	
AFH5564	R.35	
AFH5565	R.35	
AFH5566	R.35	
AFH5567	R.35	
AFH5568	R.35	
AFH5569	R.35	
AFH5570	R.35	
AFH5571	R.35	
AFH5572	R.35	
AFH5573	R.35	
AFH5574	R.35	
AFH5575	R.35	
AFH5576	R.35	
AFH5577	R.35	
AFH5578	R.35	
AFH5579	R.35	
AFH5580	R.36	
AFH5581	R.36	
AFH5582	R.36	
AFH5583	R.36	
AFH5584	R.36	
AFH5585	R.36	
AFH5586	R.34	
AFH5587	R.34	
AFH5588	R.34	
AFH5589	R.34	
AFH5590	R.34	
AFH5591	R.34	
AFH5592	R.34	
AFH5593	R.34	
AFH5594	R.34	
AFH5595	R.34	
AFH5596	R.34	
AFH5597	R.34	
AFH5598	R.34	
AFH5599	R.34	
AFH5600	R.34	
AFH5601	R.34	
AFH5602	R.34	
AFH5603	R.34	
AFH5604	R.34	
AFH5605	R.34	
AFH5606	R.30	
AFH5606	R.36	
AFH5607	R.30	
AFH5607	R.36	
AFH5608	R.30	
AFH5608	R.36	
AFH5609	R.34	
AFH5610	R.34	
AFH5611	R.34	
AFH5612	R.34	
AFH5613	R.34	
AFH5614	R.35	
AFH5615	R.35	
AFH5616	R.35	
AFH5617	R.35	
AFH5618	R.35	
AFH5620	R.35	
AFH5621	R.35	
AFH5622	R.35	
AFH5623	R.35	
AFH5624	R.35	
AFH5625	R.35	

Part Number Index—*continued*

Part Number	Page	Amdt. Number
AFH5626	R.35	
AFH5627	R.35	
AFH5628	R.35	
AFH5629	R.35	
AFH5666	R.27	
AFH5667	R.27	
AFH5668	R.27	
AFH5669	R.27	
AFH5670	R.27	
AFH5671	R.27	
AFH5672	R.27	
AFH5673	R.27	
AFH5674	R.27	
AFH5675	R.27	
AFH5676	R.27	
AFH5677	R.27	
AFH5680	R.27	
AFH5681	R.27	
AFH5682	R.27	
AFH5683	R.27	
AFH5684	R.27	
AFH5685	R.27	
AFH5686	R.27	
AFH5687	R.27	
AFH5688	R.27	
AFH5689	R.27	
AFH5690	R.27	
AFH5691	R.27	
AFH5694	R.28	
AFH5695	R.28	
AFH5696	R.28	
AFH5697	R.28	
AFH5698	R.28	
AFH5699	R.28	
AFH5700	R.28	
AFH5701	R.28	
AFH5702	R.28	
AFH5703	R.28	
AFH5704	R.28	
AFH5705	R.28	
AFH5708	R.28	
AFH5709	R.28	
AFH5710	R.28	
AFH5711	R.28	
AFH5712	R.28	
AFH5713	R.28	
AFH5714	R.28	
AFH5715	R.28	
AFH5716	R.28	
AFH5717	R.28	
AFH5718	R.28	
AFH5719	R.28	
AFH5722	R.28	
AFH5723	R.28	
AFH5724	R.28	
AFH5725	R.28	
AFH5726	R.28	
AFH5727	R.28	
AFH5728	R.28	
AFH5729	R.28	
AFH5730	R.28	
AFH5731	R.28	
AFH5732	R.28	
AFH5733	R.28	
AFH5736	R.28	
AFH5737	R.28	
AFH5738	R.28	
AFH5739	R.28	
AFH5740	R.28	
AFH5741	R.28	
AFH5754	R.37	
AFH5755	R.37	
AFH5756	R.37	
AFH5757	R.37	
AFH5762	R.37	
AFH5763	R.37	
AFH5764	R.37	
AFH5765	R.37	
AFH5785	R.37	
AFH5786	R.36	
AFH5786	R.37	
AFH5827	R.2	
AFH5827	R.6	
AFH5828	R.5	
AFH5829	R.5	
AFH5832	R.2	
AFH5832	R.6	
AFH5848	R.22	
AFH5849	R.23	
AFH5850	R.22	
AFH5851	R.23	
AFH5852	R.22	
AFH5853	R.23	
AFH5854	R.22	
AFH5855	R.23	
AFH5856	R.22	
AFH5857	R.23	
AFH5858	R.22	
AFH5859	R.23	
AFH5860	R.22	
AFH5861	R.24	
AFH5862	R.22	
AFH5863	R.24	
AFH5864	R.22	
AFH5865	R.24	
AFH5866	R.22	
AFH5867	R.24	
AFH5868	R.22	
AFH5869	R.24	
AFH5870	R.22	
AFH5871	R.24	
AFH5872	R.22	
AFH5873	R.23	
AFH5874	R.22	
AFH5875	R.23	
AFH5876	R.22	
AFH5877	R.23	
AFH5878	R.22	
AFH5879	R.23	
AFH5880	R.22	
AFH5881	R.23	
AFH5882	R.22	
AFH5883	R.23	
AFH5884	R.23	
AFH5885	R.24	
AFH5886	R.23	
AFH5887	R.24	
AFH5888	R.23	
AFH5889	R.24	
AFH5890	R.23	
AFH5891	R.24	
AFH5892	R.23	
AFH5893	R.24	
AFH5894	R.23	
AFH5895	R.24	
AFH5896	R.31	
AFH5897	R.31	
AFH5898	R.31	
AFH6450	R.22	
AFH6451	R.23	
AFH6452	R.22	
AFH6453	R.23	
AFH6454	R.22	
AFH6455	R.23	
AFH6456	R.22	
AFH6457	R.23	
AFH6458	R.22	
AFH6459	R.23	
AFH6460	R.22	
AFH6461	R.23	
AFH6462	R.31	
AFH6463	R.31	
AFH6464	R.31	
AFH6465	R.31	
AFH6466	R.31	
AFH6467	R.31	
AFH6468	R.29	
AFH6469	R.29	
AFH6470	R.29	
AFH6471	R.29	
AFH6472	R.29	
AFH6473	R.29	
AFH6474	R.29	
AFH6475	R.29	
AFH6476	R.29	
AFH6477	R.29	
AFH6478	R.29	
AFH6479	R.29	
AFH6480	R.29	
AFH6481	R.30	
AFH6482	R.29	
AFH6483	R.30	
AFH6484	R.29	
AFH6485	R.30	
AFH6486	R.29	
AFH6487	R.30	
AFH6488	R.29	
AFH6489	R.30	
AFH6490	R.29	
AFH6491	R.30	
AFH6492	R.29	
AFH6493	R.29	
AFH6494	R.29	
AFH6495	R.29	
AFH6496	R.29	
AFH6497	R.29	
AFH6498	R.29	
AFH6499	R.29	
AFH6500	R.29	
AFH6501	R.29	
AFH6502	R.29	
AFH6503	R.29	
AFH6504	R.30	
AFH6505	R.30	
AFH6506	R.30	
AFH6507	R.30	
AFH6508	R.30	
AFH6509	R.30	
AFH6510	R.30	
AFH6511	R.30	
AFH6512	R.30	
AFH6513	R.30	
AFH6514	R.30	
AFH6515	R.30	
AFH6516	R.30	
AFH6517	R.30	
AFH6518	R.30	
AFH6519	R.30	

Part Number Index—*continued*

Part Number	Page	Amdt. Number	Part Number	Page	Amdt. Number	Part Number	Page	Amdt. Number	Part Number	Page	Amdt. Number
AFH6520	R.30		AHH4004	K.3		AHH5147	D.7		AHH5252	R.8	
AFH6521	R.30		AHH5002	Q.1		AHH5148	D.7		AHH5253	R.4	
AFH6522	R.30		AHH5015	H.5		AHH5149	D.7		AHH5253	R.8	
AFH6523	R.30		AHH5016	H.5		AHH5151	R.19		AHH5254	O.1	
AFH6524	R.30		AHH5018	H.5		AHH5161	R.19		AHH5255	O.1	
AFH6525	R.30		AHH5019	H.5		AHH5162	R.19		AHH5256	O.1	
AFH6526	R.30		AHH5025	M.4		AHH5163	R.20		AHH5257	O.1	
AFH6527	R.30		AHH5027	A.17		AHH5164	R.20		AHH5258	O.1	
AFH6528	R.33		AHH5028	A.17		AHH5166	N.1		AHH5259	R.11	
AFH6529	R.33		AHH5029	L.1		AHH5167	N.1		AHH5260	R.11	
AFH6530	R.33		AHH5030	L.1		AHH5168	N.1		AHH5261	R.11	
AFH6531	R.15		AHH5031	A.17		AHH5169	N.1		AHH5262	R.9	
AFH6532	R.15		AHH5042	H.5		AHH5170	N.1		AHH5263	R.9	
AFH6533	R.15		AHH5065	A.17		AHH5171	A.16		AHH5278	M.3	
AFH6534	R.15		AHH5066	A.17		AHH5173	Q.2		AHH5279	M.3	
AFH6535	R.37		AHH5067	H.5		AHH5174	Q.2		AHH5280	M.3	
AFH6536	R.37		AHH5068	H.5		AHH5175	Q.2		AHH5281	M.3	
AFH6537	R.37		AHH5069	G.1		AHH5176	Q.2		AHH5282	M.3	
AFH6544	R.33		AHH5070	K.3		AHH5177	Q.2		AHH5283	M.3	
AFH6545	R.33		AHH5071	H.5		AHH5178	Q.2		AHH5284	M.2	
AFH6546	R.33		AHH5080	S.1		AHH5179	C.1		AHH5286	D.3	
AFH6547	R.33		AHH5081	H.5		AHH5180	R.9		AHH5287	O.1	
AFH6548	R.33		AHH5082	H.5		AHH5185	O.2		AHH5289	D.3	
AFH6549	R.33		AHH5083	M.1		AHH5186	O.2		AHH5291	D.3	
AFH6550	R.37		AHH5084	M.1		AHH5187	O.2		AHH5292	O.2	
AFH6551	R.37		AHH5085	M.1		AHH5188	O.3		AHH5293	Q.1	
AFH6552	R.37		AHH5089	M.1		AHH5189	O.3		AHH5294	R.40	
AFH6553	R.37		AHH5090	M.1		AHH5194	R.9		AHH5295	M.5	
AFH6554	R.37		AHH5091	E.2		AHH5195	M.3		AHH5297	M.5	
AFH6555	R.37		AHH5092	M.1		AHH5198	R.40		AHH5299	A.16	
AFH6560	R.27		AHH5093	R.21		AHH5199	R.9		AHH5300	A.19	
AFH6561	R.27		AHH5094	R.21		AHH5200	R.9		AHH5301	A.19	
AFH6562	R.27		AHH5100	E.2		AHH5203	M.4		AHH5302	A.19	
AFH6563	R.27		AHH5100	M.1		AHH5205	R.9		AHH5303	A.19	
AFH6564	R.28		AHH5101	M.1		AHH5206	R.9		AHH5304	A.19	
AFH6565	R.28		AHH5102	M.1		AHH5207	R.9		AHH5306	A.19	
AFH6566	R.28		AHH5103	M.1		AHH5208	R.9		AHH5308	A.19	
AFH6567	R.28		AHH5104	D.3		AHH5209	R.9		AHH5309	A.19	
AFH6568	R.28		AHH5106	H.5		AHH5224	M.4		AHH5309	A.20	
AFH6569	R.28		AHH5107	D.3		AHH5225	M.4		AHH5310	A.20	
AFH6570	R.28		AHH5113	D.3		AHH5226	R.9		AHH5311	A.19	
AFH6571	R.38		AHH5114	D.3		AHH5227	M.4		AHH5314	A.19	
AFH6572	R.38		AHH5115	D.3		AHH5228	M.4		AHH5320	A.19	
AFH6573	R.38		AHH5117	E.2		AHH5229	M.4		AHH5321	A.19	
AFH6574	R.38		AHH5121	D.3		AHH5230	M.4		AHH5322	M.4	
AFH6608	R.38		AHH5124	S.1		AHH5232	M.4		AHH5323	O.3	
			AHH5129	Q.1		AHH5233	M.4		AHH5325	R.9	
AHA5211	R.19		AHH5139	Q.1		AHH5238	M.4		AHH5327	A.21	
			AHH5140	Q.1		AHH5242	M.4		AHH5328	A.21	
AHH4001	K.3		AHH5143	C.1		AHH5244	M.4		AHH5329	A.21	
AHH4002	K.3		AHH5144	C.1		AHH5248	Q.1		AHH5330	A.21	
AHH4003	K.3		AHH5146	A.18		AHH5252	R.4		AHH5331	A.21	

Part Number Index—*continued*

Part Number	Page	Amdt. Number
AHH5332	A.21	
AHH5333	A.21	
AHH5334	A.21	
AHH5335	A.21	
AHH5336	A.21	
AHH5337	A.21	
AHH5338	A.21	
AHH5339	A.20	
AHH5340	R.9	
AHH5343	Q.1	
AHH5344	Q.1	
AHH5345	Q.1	
AHH5346	Q.1	
AHH5347	N.3	
AHH5349	R.11	
AHH5350	R.11	
AHH5351	R.11	
AHH5353	O.2	
AHH5354	O.2	
AHH5360	N.3	
AHH5362	N.3	
AHH5364	N.3	
AHH5366	N.3	
AHH5368	N.3	
AHH5369	N.3	
AHH5370	O.1	
AHH5376	O.1	
AHH5377	R.9	
AHH5378	R.9	
AHH5379	R.9	
AHH5380	A.19	
AHH5388	F.5	
AHH5392	N.6	
AHH5393	N.6	
AHH5394	D.7	
AHH5394	R.43	
AHH5396	R.40	
AHH5402	A.18	
AHH5403	A.18	
AHH5404	A.18	
AHH5405	A.18	
AHH5406	A.18	
AHH5407	A.18	
AHH5408	Q.2	
AHH5409	Q.2	
AHH5410	N.9	
AHH5411	N.9	
AHH5414	N.9	
AHH5417	N.9	
AHH5419	N.9	
AHH5421	N.9	
AHH5422	R.42	
AHH5423	R.42	
AHH5424	R.42	
AHH5426	R.42	
AHH5427	R.42	
AHH5428	R.42	
AHH5429	R.42	
AHH5430	R.42	
AHH5430	R.43	
AHH5432	R.42	
AHH5433	R.42	
AHH5434	R.43	
AHH5435	R.43	
AHH5436	R.43	
AHH5437	R.43	
AHH5438	R.43	
AHH5440	R.43	
AHH5441	D.7	
AHH5442	D.7	
AHH5444	N.10	
AHH5445	N.10	
AHH5446	N.10	
AHH5447	N.10	
AHH5448	N.10	
AHH5449	N.10	
AHH5450	N.10	
AHH5451	N.10	
AHH5452	N.10	
AHH5453	N.8	
AHH5454	N.6	
AHH5455	R.9	
AHH5456	R.9	
AHH5458	Q.2	
AHH5459	R.11	
AHH5460	R.17	
AHH5461	H.5	
AHH5462	H.5	
AHH5464	H.5	
AHH5467	H.5	
AHH5470	H.5	
AHH5474	R.20	
AHH5476	R.20	
AHH5477	R.20	
AHH5478	R.20	
AHH5479	R.20	
AHH5480	R.20	
AHH5481	R.20	
AHH5482	R.20	
AHH5483	R.21	
AHH5484	R.21	
AHH5485	R.21	
AHH5486	R.20	
AHH5487	R.20	
AHH5488	R.20	
AHH5491	R.20	
AHH5492	R.20	
AHH5494	R.20	
AHH5494	R.21	
AHH5495	R.41	
AHH5505	N.6	
AHH5506	N.8	
AHH5506	Q.1	
AHH5507	N.9	
AHH5508	N.9	
AHH5509	R.27	
AHH5510	R.27	
AHH5511	R.27	
AHH5512	R.27	
AHH5514	H.3	
AHH5514	K.2	
AHH5520	N.7	
AHH5521	N.7	
AHH5526	R.41	
AHH5527	R.41	
AHH5528	Q.2	
AHH5529	R.43	
AHH5531	R.42	
AHH5532	R.43	
AHH5533	D.6	
AHH5536	R.41	
AHH5537	R.43	
AHH5539	R.40	
AHH5541	N.6	
AHH5544	D.3	
AHH5546	K.3	
AHH5562	R.39	
AHH5565	R.40	
AHH5568	G.1	
AHH5591	R.42	
AHH5593	R.43	
AHH5594	S.1	
AHH5601	R.42	
AHH5602	R.42	
AHH5605	D.3	
AHH5606	D.3	
AHH5621	A.20	
AHH5623	A.20	
AHH5624	A.20	
AHH5625	A.19	
AHH5626	A.19	
AHH5627	M.3	
AHH5629	M.3	
AHH5631	M.3	
AHH5633	M.3	
AHH5634	H.4	
AHH5650	R.39	
AHH5652	R.39	
AHH5653	R.39	
AHH5660	R.39	
AHH5661	R.39	
AHH5662	R.39	
AHH5663	R.39	
AHH5664	R.39	
AHH5665	R.39	
AHH5666	R.39	
AHH5667	R.39	
AHH5668	R.39	
AHH5669	R.39	
AHH5670	R.39	
AHH5671	R.39	
AHH5672	R.39	
AHH5673	R.39	
AHH5674	R.39	
AHH5710	R.41	
AHH5712	R.19	
AHH5713	A.16	
AHH5714	D.7	
AHH5714	R.42	
AHH5714	R.43	
AHH5730	G.1	
AHH5731	R.39	
AHH5732	R.39	
AHH5733	R.39	
AHH5734	R.39	
AHH5735	R.39	
AHH5736	R.39	
AHH5737	R.39	
AHH5738	R.39	
AHH5739	R.39	
AHH5740	R.39	
AHH5741	R.39	
AHH5742	R.39	
AHH5743	R.39	
AHH5744	R.39	
AHH5745	R.39	
AHH5746	R.39	
AHH5747	R.39	
AHH5748	R.9	
AHH5749	R.9	
AHH5750	R.43	
AHH5758	N.7	
AHH5759	R.40	
AHH5798	R.13	
AHH5802	O.3	
AHH5808	R.39	
AHH5815	R.9	
AHH5817	R.9	

Part Number Index—*continued*

Part Number	Page	Amdt. Number
AHH5838	R.9	
AHH5839	S.1	
AHH5840	M.1	
AHH5841	E.2	
AHH5842	E.2	
AHH5897	K.3	
AHH5910	R.43	
AHH5911	R.43	
AHH5912	R.43	
AHH5924	Q.1	
AHH5925	K.3	
AHH5927	K.4	
AHH5929	K.4	
AHH5931	K.4	
AHH5932	K.4	
AHH5934	K.4	
AHH5935	K.4	
AHH5939	K.4	
AHH5940	K.4	
AHH5941	K.4	
AHH5963	N.1	
AHH5964	N.1	
AHH6000	J.2	
AHH6001	J.1	
AHH6001	J.3	
AHH6002	J.1	
AHH6003	J.3	
AHH6004	J.3	
AHH6005	J.3	
AHH6006	J.3	
AHH6007	J.2	
AHH6008	J.3	
AHH6009	J.3	
AHH6010	J.3	
AHH6011	J.2	
AHH6012	J.4	
AHH6013	J.1	
AHH6016	J.1	
AHH6019	J.1	
AHH6020	J.1	
AHH6021	J.1	
AHH6022	J.1	
AHH6023	J.1	
AHH6024	J.3	
AHH6025	J.2	
AHH6027	J.2	
AHH6027	J.4	
AHH6028	J.2	
AHH6030	J.3	
AHH6031	J.4	
AHH6032	J.4	
AHH6033	J.4	
AHH6035	J.3	
AHH8002	P.1	
AHH8008	P.1	
AHH8009	P.1	
AHH8010	P.1	
AJA5028	M.3	
AJA5069	N.6	
AJA5070	N.6	
AJA5071	N.6	
AJA5072	N.6	
AJA5073	N.6	
AJA5081	N.5	
AJB6025	J.1	
AJC5033	A.3	
AJC6014	J.4	
AJD30	M.3	
AJD78	M.3	
AJD82	M.3	
AJD118	E.2	
AJD276	E.2	
AJD1243Z	N.3	
AJD2245Z	R.14	
AJD2446C	R.39	
AJD2448C	R.39	
AJD6155Z	D.2	
AJD6918	S.1	
AJD7042	A.19	
AJD7042	A.20	
AJD7202	N.3	
AJD7212	D.2	
AJD7212	N.4	
AJD7212	R.11	
AJD7605	R.9	
AJD7712	A.20	
AJD7712	C.1	
AJD8012Z	N.6	
AJD8012Z	R.9	
AJD8012Z	R.38	
AJD8104Z	N.1	
AJD8172	R.36	
AJD8172	R.37	
AJG5016	M.2	
AJG5046	O.1	
AJG5047	O.1	
AJH5057	N.6	
AJH5082	M.2	
AJH5083	M.2	
AJH5084	M.2	
AJH5085	M.2	
AJH5086	M.2	
AJH5128	M.2	
AJH5133	M.2	
AJH5151	N.5	
AJH5170	G.1	
AJH5172	H.4	
AJH5172	K.2	
AJH5176	O.2	
AJH5177	O.2	
AJH5178	O.2	
AJH5179	O.2	
AJH5182	O.3	
AJH5185	O.3	
AJH5186	O.3	
AJH5292	D.4	
AJJ279	S.1	
AJJ281	S.1	
AJJ3020	A.20	
AJJ3125	R.39	
AKC451	R.14	
AKC453	R.14	
AKC454	R.14	
AKC455	R.14	
AKC458	R.14	
AKD598	S.6	
AKD598G	S.6	
AKD599	S.6	
AKD600A	S.6	
AKD677	S.6	
AKD693	S.6	
AKD727B	S.6	
AKD770	S.6	
AKD782B	S.6	
AKD819A	S.6	
AKD858A	S.6	
AKD873A	S.6	
AKD981	S.6	
AKE1756	R.38	
AKE1757	R.38	
AKE1758	R.38	
AKE1759	R.38	
AKE1760	R.38	
AKE1761	R.38	
AKE1762	R.38	
AKE1763	R.38	
AKE1764	R.15	
AKE1765	R.15	
AKE1766	R.15	
AKE1767	R.15	
AKJ16	S.2	
AKJ17	S.2	
AKJ18	S.2	
AKJ19	S.2	
AKJ20	S.2	
AKJ41	S.2	
AKJ42	S.2	
AKJ43	S.2	
AKJ44	S.2	
AKJ45	S.2	
AKJ756	S.2	
AKJ757	S.2	
AKJ758	S.2	
AKJ759	S.2	
AKJ760	S.2	
AKJ776	S.2	
AKJ777	S.2	
AKJ778	S.2	
AKJ779	S.2	
AKJ780	S.2	
AKJ781	S.2	
AKJ782	S.2	
AKJ783	S.2	
AKJ784	S.2	
AKJ785	S.2	
AKJ1011	S.2	
AKJ1012	S.2	
AKJ1013	S.2	
AKJ1014	S.2	
AKJ1015	S.2	
AKJ1261	S.2	
AKJ1262	S.2	
AKJ1263	S.2	
AKJ1264	S.2	
AKJ1265	S.2	
AKJ1451	S.2	
AKJ1452	S.2	
AKJ1453	S.2	
AKJ1454	S.2	
AKJ1455	S.2	
AKJ1476	S.2	
AKJ1477	S.2	
AKJ1478	S.2	
AKJ1479	S.2	
AKJ1480	S.2	
AKJ2001	S.3	
AKJ2002	S.3	

Part Number Index—*continued*

Part Number	Page	Amdt. Number
AKJ2003	S.3	
AKJ2004	S.3	
AKJ2005	S.3	
AMK5607	N.3	
AMK8847	R.43	
AMK9958	S.1	
ANK4646	N.3	
ANK4646	R.14	
ARH52	C.1	
ARH57	O.1	
ARH58	O.1	
ARH59	O.1	
ARH63	A.18	
ARH65	A.18	
ARH120	C.1	
ARH517	C.1	
ARH883	C.1	
ARH898	C.1	
ARH899	C.1	
ARH900	C.1	
ARH901	C.1	
ARH902	C.1	
ARH931	C.1	
ARH1022	C.1	
ARH1050	C.1	
ARH1053	A.18	
ARJ509	C.1	
ATA7043	H.1	
ATA7047	H.1	
ATB4067	K.1	
ATB4069	K.1	
ATB4098	K.1	
ATB4124	K.1	
ATB4125	K.2	
ATB4131	K.1	
ATB4165	K.2	
ATB4180	K.1	
ATB4181	K.1	
ATB4186	K.1	
ATB4187	K.1	
ATB4190	K.2	
ATB4191	K.2	
ATB4206	K.1	
ATB4207	K.1	
ATB4208	K.1	
ATB4209	K.1	
ATB4212	K.1	
ATB4213	K.1	
ATB4218	K.1	
ATB4219	K.1	
ATB4222	P.1	
ATB4223	P.1	
ATB4260	K.1	
ATB4261	K.1	
ATB4268	K.1	
ATB4269	K.1	
ATB7059	H.2	
ATB7062	H.1	
ATB7064	H.2	
ATB7065	H.2	
ATB7066	H.2	
ATB7067	H.2	
ATB7068	H.2	
ATB7069	H.2	
ATB7070	H.2	
ATB7071	H.2	
ATB7072	H.1	
ATB7074	H.2	
ATB7074	K.1	
ATB7075	H.3	
ATB7075	K.2	
ATB7078	H.4	
ATB7079	H.4	
ATB7102	H.2	
ATB7103	H.2	
ATB7104	H.2	
ATB7105	H.2	
ATB7106	H.2	
ATB7107	H.2	
ATB7108	H.2	
ATB7122	H.1	
ATB7123	H.1	
ATB7156	H.1	
ATB7181	H.1	
ATB7189	H.1	
ATB7190	H.2	
ATB7199	H.1	
ATB7201	H.3	
ATB7204	H.3	
ATB7205	H.3	
ATB7206	H.3	
ATB7208	H.3	
ATB7209	H.3	
ATB7224	H.1	
ATB7225	H.1	
ATB7229	H.2	
ATB7239	H.1	
ATB7355	H.2	
ATC4067	K.2	
ATC7084	H.1	
AUA54	D.1	
AUA508	D.1	
AUA839	D.1	
AUA840	D.1	
AUA847	D.1	
AUA868	D.1	
AUA869	D.1	
AUA878	D.1	
AUA887	D.1	
AUA1405	D.1	
AUA1416	D.1	
AUA1421	D.1	
AUA1422	D.1	
AUA1433	D.1	
AUA1435	D.1	
AUA1442	D.1	
AUA1455	D.1	
AUA1456	D.1	
AUA1459	D.1	
AUA1464	D.1	
AUA1468	D.1	
AUA1478	D.2	
AUA1479	D.1	
AUA1661	D.1	
AUA1662	D.1	
AUA1785	D.1	
AUA1863	D.1	
AUA4080	D.1	
AUA4081	D.1	
AUA4082	D.1	
AUA4083	D.1	
AUA4643	D.4	
AUA4850	D.1	
AUA5059	D.1	
AUA5060	D.1	
AUA5078	D.1	
AUA6003	D.1	
AUA6010	D.1	
AUA6020	D.1	
AUA6032	D.1	
AUA6034	D.1	
AUC1006	D.6	
AUC1058	D.4	
AUC1123	D.5	
AUC1135	D.5	
AUC1137	D.5	
AUC1149	D.4	
AUC1151	D.4	
AUC1152	D.5	
AUC1158	D.4	
AUC1334	D.5	
AUC1358	D.5	
AUC1501	D.5	
AUC1557	D.5	
AUC1832	D.5	
AUC1863	D.6	
AUC1867	D.5	
AUC1928	D.5	
AUC1980	D.5	
AUC2106	D.5	
AUC2109	D.4	
AUC2114	D.4	
AUC2117	D.4	
AUC2119	D.4	
AUC2120	D.4	
AUC2121	D.4	
AUC2132	D.4	
AUC2139	D.5	
AUC2141	D.5	
AUC2156	D.5	
AUC2156	D.6	
AUC2175	D.4	
AUC2198	D.5	
AUC2246	D.5	
AUC2381	D.4	
AUC2402	D.6	
AUC2451	D.5	
AUC2468	D.4	
AUC2521	D.5	
AUC2669	D.5	
AUC2669	D.6	
AUC2673	D.5	
AUC2673	D.6	
AUC2694	D.5	
AUC2698	D.5	
AUC3071	D.4	
AUC3116	D.5	
AUC3119	D.4	
AUC3202	D.5	
AUC3230	D.4	
AUC3231	D.4	
AUC3232	D.4	
AUC3233	D.4	
AUC3242	D.5	
AUC3464	D.5	
AUC3465	D.5	
AUC3471	D.5	
AUC3472	D.5	
AUC3495	D.5	
AUC3496	D.5	

Part Number Index—*continued*

Part Number	Page	Amdt. Number
AUC4260	D.5	
AUC4261	D.5	
AUC4334	D.6	
AUC4387	D.4	
AUC4490	D.4	
AUC4612	D.5	
AUC4612	D.6	
AUC4631	D.4	
AUC4667	D.4	
AUC4713	D.5	
AUC4730	D.5	
AUC4732	D.5	
AUC4770	D.5	
AUC4771	D.5	
AUC4781	D.5	
AUC4782	D.5	
AUC4819	D.4	
AUC4900	D.4	
AUC4915	D.6	
AUC4916	D 6	
AUC5091	D 4	
AUC5092	D.4	
AUC6031	D.4	
AUC6033	D.4	
AUC8019	D.4	
AUC8102	D.4	
AUC8170	D.5	
AUC8182	D.4	
AUC9020	D.4	
AUC9021	D.4	
1B1063	A.10	
1B1735	A.10	
1B2925	A.6	
1B3363	F.4	
1B3664	A.6	
1B7240	H.1	
1B8077	P.1	
1B8078	P.1	
1B9007	N.8	
1B9008	N.8	
1B9141	O.2	
11B5166	S.1	
14B2846	R.18	
14B5588	N.9	
BCA4046	M.2	
BCA4302	N.5	
BCA4303	N.5	
BHA4066	R.41	
BHA4067	S.1	
BHA4075	N.7	
BHA4076	S.1	
BHA4081	O.3	
BHA4110	O.3	
BHA4116	N.4	
BHA4117	N.10	
BHA4132	R.42	
BHA4133	N.10	
BHA4140	N.1	
BHA4147	N.1	
BLS108	F.5	
BLS109	F.4	
BLS110	F.2	
BLS110	F.5	
BRP906	R.3	
BRP906	R.7	
BXS0708	S.1	
BXS0910	S.1	
BXS1112	S.1	
CA1056	F.5	
CCN240	F.1	
CHR0409	E.2	
CHR0409	M.3	
CHR0507	N.3	
CHR0511	D.3	
CHS2513	F.1	
CLZ0512	E.2	
CLZ0517	E.2	
CMP0204	R.16	
CMP0307	R.12	
CMZ0204	R.16	
CMZ0308	N.3	
CMZ0310	R.10	
CMZ0320	R.31	
CMZ0407	K.2	
CMZ0410	H.3	
CMZ0410	R.27	
CMZ0418	K.3	
CMZ0420	R.9	
CMZ0516	A.17	
CNZ102	B.2	
CNZ102	O.1	
CNZ102	R.10	
CNZ102	R.17	
CNZ102	R.38	
CPS0308	A.5	
CPZ0408	R.9	
CPZ0412	R.2	
CPZ0412	R.6	
CPZ0412	R.9	
CPZ0412	R.14	
CPZ0416	R.9	
CPZ0420	R.9	
CPZ0420	R.14	
CTZ403	R.10	
CTZ403	R.31	
CTZ603	R.36	
CTZ604	R.31	
CTZ803	Q.1	
CTZ804	R.2	
1D1963	B.1	
8D5768	N.9	
1F9026	N.5	
1F9026	N.6	
1F9034	N.6	
2F249	A.10	
FLS2513	A.6	
FNN105	A.6	
FNN105	A.8	
FNN504	F.2	
FNN605	A.5	
FNP205	F.5	
FNP205	J.4	
FNZ103	A.19	
FNZ103	A.20	
FNZ103	C.1	
FNZ103	D.7	
FNZ103	M.5	
FNZ103	N.3	
FNZ103	N.4	
FNZ103	N.5	
FNZ103	N.7	
FNZ103	N.9	
FNZ103	N.10	
FNZ103	O.1	
FNZ103	O.3	
FNZ103	Q.1	
FNZ103	R.1	
FNZ103	R.2	
FNZ103	R.4	
FNZ103	R.5	
FNZ103	R.6	
FNZ103	R.10	
FNZ103	R.14	
FNZ103	R.17	
FNZ103	R.31	
FNZ103	R.36	
FNZ103	R.42	
FNZ103	R.43	
FNZ104	A.18	
FNZ104	A.19	
FNZ104	A.20	
FNZ104	B.1	
FNZ104	D.2	
FNZ104	D.3	
FNZ104	K.3	
FNZ104	M.1	
FNZ104	M.3	
FNZ104	M.4	
FNZ104	N.8	
FNZ104	N.9	
FNZ104	N.10	
FNZ104	O.2	
FNZ104	R.2	
FNZ104	R.3	
FNZ104	R.6	
FNZ104	R.7	
FNZ104	R.18	
FNZ104	R.19	
FNZ104	R.27	
FNZ105	A.4	
FNZ105	A.6	
FNZ105	A.7	
FNZ105	A.17	
FNZ105	A.18	
FNZ105	A.19	
FNZ105	F.1	
FNZ105	H.1	
FNZ105	H.5	
FNZ105	J.2	
FNZ105	J.3	
FNZ105	K.3	
FNZ105	K.4	

Part Number Index—*continued*

Part Number	Page	Amdt. Number
FNZ105	M.1	
FNZ105	M.3	
FNZ105	M.4	
FNZ105	M.5	
FNZ105	N.7	
FNZ105	N.8	
FNZ105	N.10	
FNZ105	Q.1	
FNZ105	Q.2	
FNZ105	R.20	
FNZ106	A.16	
FNZ106	H.4	
FNZ106	H.5	
FNZ106	K.2	
FNZ106	K.3	
FNZ106	M.1	
FNZ106	M.2	
FNZ106	Q.1	
FNZ106	R.20	
FNZ106	R.21	
FNZ107	H.5	
FNZ107	L.1	
FNZ107	R.21	
FNZ108	K.4	
FNZ108	L.1	
FNZ108	R.20	
FNZ108	R.21	
FNZ204	D.2	
FNZ204	N.1	
FNZ204	N.10	
FNZ204	R.9	
FNZ205	H.5	
FNZ205	R.19	
FNZ206	A.16	
FNZ206	K.2	
FNZ206	R.18	
FNZ207	A.11	
FNZ207	N.1	
FNZ208	R.32	
FNZ308	K.3	
FNZ407	J.2	
FNZ408	K.3	
FNZ412	K.1	
FNZ506	A.4	
FNZ506	A.12	
FNZ507	H.3	
FNZ612	F.3	
FNZ612	H.2	
FNZ2412	K.1	
1G752	A.2	
1G765	A.3	
1G1167	A.3	
1G1282	A.6	
1G1319	A.3	
1G1361	A.3	
1G1365	A.6	
1G1452	A.9	
1G1783	A.12	
1G1989	A.8	
1G2285	A.4	
1G2290	A.10	
1G2295	A.5	
1G2301	A.11	
1G2302	A.11	
1G2303	A.11	
1G2310	A.11	
1G2331	A.2	
1G2332	A.2	
1G2340	A.3	
1G2342	A.6	
1G2342	A.8	
1G2367	A.3	
1G2370	A.3	
1G2380	A.4	
1G2385	A.8	
1G2390	A.8	
1G2391	A.8	
1G2393	A.7	
1G2394	A.7	
1G2398	A.4	
1G2399	A.4	
1G2401	A.4	
1G2417	A.16	
1G2418	A.16	
1G2425	A.7	
1G2443	A.7	
1G2444	A.7	
1G2508	A.10	
1G2522	A.5	
1G2613	N.4	
1G2620	B.1	
1G2673	B.1	
1G2716	A.12	
1G2874	A.4	
1G2882	A.5	
1G2953	A.6	
1G2984	A.4	
1G3268	F.3	
1G3331	F.4	
1G3418	F.1	
1G3492	F.3	
1G3530	F.3	
1G3576	F.4	
1G3577	F.4	
1G3578	F.4	
1G3579	F.4	
1G3580	F.4	
1G3581	F.4	
1G3582	F.4	
1G3584	F.3	
1G3586	F.3	
1G3594	F.4	
1G3597	F.4	
1G3598	F.4	
1G3611	F.3	
1G3612	F.3	
1G3613	F.3	
1G3639	F.3	
1G3642	F.1	
1G3653	F.4	
1G3656	F.1	
1G3658	F.1	
1G3666	F.1	
1G3667	F.1	
1G3668	F.2	
1G3668	H.1	
1G3680	F.2	
1G3682	F.2	
1G3685	F.2	
1G3686	F.3	
1G3687	F.3	
1G3688	F.3	
1G3690	F.2	
1G3691	F.2	
1G3692	F.2	
1G3704	F.4	
1G3706	F.5	
1G3708	F.3	
1G3709	F.4	
1G3711	F.5	
1G3712	F.1	
1G3713	F.5	
1G3802	F.1	
1G3804	F.1	
1G3809	F.2	
1G3810	F.2	
1G3863	F.5	
1G3927	F.5	
1G4359	K.1	
1G7305	H.1	
1G7372	S.1	
1G7433	H.2	
1G7435	H.2	
1G7436	H.2	
1G7439	H.1	
1G7444	H.1	
1G7445	H.1	
1G7448	H.1	
1G7465	H.1	
1G7582	H.1	
1G7584	H.1	
1G7593	G.1	
4G2541	O.2	
4G2541	R.4	
4G2541	R.8	
4G2541	R.40	
8G207	A.1	
8G210	A.1	
8G500	F.1	
8G548	N.3	
8G549	A.3	
8G555	H.2	
8G612	A.6	
8G619	A.9	
8G619	A.9	
8G662	A.11	
8G683	A.9	
8G698	A.11	
8G1057	A.15	
8G1058	A.15	
8G1073	A.15	
8G2081	A.1	
8G2130	A.11	
8G2137	A.3	
8G2175	A.1	
8G2176	A.1	
8G2285	A.3	
8G3000	G.1	
8G8025	H.4	
8G8025	K.2	
8G8183	G.1	
8G8348	E.1	
8G208110	A.13	
8G208120	A.13	
8G208130	A.13	
8G208140	A.13	
8G213710	A.13	
8G213720	A.13	
8G213730	A.13	
8G213740	A.13	
8G217510	A.13	
8G217520	A.13	
8G217530	A.13	
8G217540	A.13	
8G228510	A.13	

Part Number Index—*continued*

Part Number	Page	Amdt. Number
8G228520	A.13	
8G228530	A.13	
8G228540	A.13	
11G10	A.8	
11G12	A.8	
11G14	A.1	
11G15	A.8	
11G37	A.8	
11G45	A.5	
11G47	A.5	
11G62	A.5	
11G64	A.10	
11G81	A.3	
11G93	A.7	
11G95	A.7	
11G96	A.7	
11G97	A.7	
11G99	A.3	
11G133	A.6	
11G136	A.3	
11G143	A.8	
11G164	A.11	
11G165	A.11	
11G176	A.12	
11G193	A.5	
11G200	A.11	
11G203	A.3	
11G204	A.11	
11G209	A.11	
11G218	A.5	
11G219	A.5	
11G220	H.1	
11G221	B.1	
11G241	A.4	
11G259	A.11	
11G260	A.11	
11G291	A.6	
11G300	A.6	
11G313	A.5	
11G2007	N.3	
11G3022	F.4	
11G3024	F.4	
11G3026	F.4	
11G3027	F.4	
11G3028	F.4	
11G3029	F.4	
11G3030	F.4	
11G3035	F.3	
11G3039	F.3	
11G3042	F.3	
11G3063	F.4	
11G3064	F.4	
11G3079	F.2	
11G3080	F.2	
11G3084	F.3	
11G3090	F.4	
11G3092	F.4	
11G3093	F.4	
11G3100	F.2	
11G3123	F.4	
11G3124	F.4	
11G3127	F.3	
11G3128	F.3	
11G3129	F.3	
11G3131	F.3	
11G3132	F.3	
11G3133	F.3	
11G3134	F.2	
11G3135	F.2	
11G3137	F.2	
11G3140	F.2	
11G3145	F.4	
11G3147	F.1	
11G3187	F.2	
11G3193	F.4	
11G3195	F.4	
11G3196	F.4	
11G3197	F.1	
11G3199	F.4	
11G3221	F.3	
11G3223	F.3	
11G3225	F.3	
11G3226	F.3	
11G9093	N.8	
11G019310	A.13	
11G031310	A.13	
14G800	R.42	
14G800	R.43	
14G3722	N.9	
14G6451	R.43	
18G25	S.4	
18G25A	S.4	
18G25B	S.4	
18G25C	S.4	
18G27	S.4	
18G28B	S.4	
18G28C	S.4	
18G29	S.4	
18G34A	S.5	
18G45	S.4	
18G47C	S.5	
18G47T	S.5	
18G55A	S.4	
18G60	S.4	
18G69	S.4	
18G98	S.4	
18G99A	S.4	
18G123A	S.4	
18G123AB	S.4	
18G123AC	S.4	
18G123AD	S.4	
18G123B	S.4	
18G123E	S.4	
18G123F	S.4	
18G123L	S.4	
18G123T	S.4	
18G124A	S.4	
18G124B	S.4	
18G124C	S.4	
18G124F	S.4	
18G124H	S.4	
18G134	S.5	
18G134M	S.5	
18G134N	S.5	
18G134P	S.5	
18G152	S.5	
18G174	S.4	
18G174A	S.4	
18G174D	S.4	
18G191B	S.5	
18G222	S.5	
18G223	S.5	
18G226	S.4	
18G264	S.5	
18G264E	S.5	
18G264F	S.5	
18G264K	S.5	
18G266	S.5	
18G273	S.4	
18G279	S.4	
18G283	S.5	
18G283A	S.5	
18G284	S.5	
18G284A	S.4	
18G285	S.5	
18G304	S.5	
18G304B	S.5	
18G304J	S.5	
18G308B	S.5	
18G310	S.5	
18G312	S.5	
18G313	S.5	
18G353	S.5	
18G372	S.5	
18G375D	S.4	
18G389	S.5	
18G389B	S.5	
18G528	S.5	
18G529	S.5	
48G31	A.5	
48G32	F.1	
48G38	A.1	
48G39	A.1	
48G44	A.1	
48G100	F.1	
48G122	A.14	
48G127	F.1	
48G137	F.4	
48G138	A.14	
48G139	A.14	
48G143	A.16	
48G151	A.1	
48G165	A.1	
48G166	A.1	
1H353	A.1	
1H573	A.6	
1H577	A.2	
1H591	A.4	
1H605	A.4	
1H651	A.4	
1H686	A.5	
1H701	A.3	
1H703	A.3	
1H711	A.2	
1H721	A.4	
1H722	A.5	
1H723	A.5	
1H724	A.5	
1H725	A.5	
1H726	A.5	
1H727	A.6	
1H729	A.3	
1H730	A.4	
1H744	A.4	
1H749	A.2	
1H751	A.2	
1H752	A.2	
1H753	A.3	
1H756	A.9	
1H762	A.10	
1H765	A.3	
1H770	A.7	
1H771	A.7	

Part Number Index—*continued*

Part Number	Page	Amdt. Number
1H774	A.7	
1H778	A.9	
1H782	B.1	
1H811	B.1	
1H813	A.1	
1H821	A.7	
1H822	A.4	
1H830	B.2	
1H840	A.7	
1H841	B.2	
1H849	A.2	
1H851	A.2	
1H871	A.7	
1H873	A.7	
1H898	A.10	
1H919	B.2	
1H922	A.10	
1H998	A.12	
1H1001	A.12	
1H1005	A.10	
1H1024	E.1	
1H1025	A.5	
1H1049	A.6	
1H1051	A.9	
1H1052	A.9	
1H1053	A.9	
1H1056	A.10	
1H1059	A.5	
1H1060	A.5	
1H1067	A.9	
1H1068	A.9	
1H1069	A.9	
1H1070	B.1	
1H1087	A.2	
1H1088	A.2	
1H1113	A.2	
1H1118	A.2	
1H1142	A.2	
1H1144	A.2	
1H1145	A.2	
1H1146	A.2	
1H1149	A.11	
1H1151	A.11	
1H1152	A.11	
1H1153	A.11	
1H1154	A.11	
1H1191	A.8	
1H1192	A.8	
1H1198	A.8	
1H1302	B.1	
1H1319	A.5	
1H1320	A.5	
1H1321	A.5	
1H1329	A.6	
1H1419	A.5	
1H1420	A.5	
1H1435	A.3	
1H3084	F.1	
1H3087	F.5	
1H3092	F.3	
1H3093	F.3	
1H3095	F.2	
1H3133	F.2	
1H3134	F.2	
1H3138	F.1	
1H3139	F.3	
1H3140	F.1	
1H3147	F.1	
1H3149	F.1	
1H3151	F.3	
1H3167	F.1	
1H3241	F.3	
1H3257	F.2	
1H3258	F.2	
1H3273	F.1	
1H3275	F.1	
1H3277	F.3	
1H3304	F.3	
1H3339	F.1	
1H3362	F.1	
1H3364	F.2	
1H057702	A.13	
1H057704	A.13	
1H057706	A.13	
1H071110	A.13	
1H071120	A.13	
1H071130	A.13	
1H071140	A.13	
1H074940	A.13	
1H075110	A.13	
1H075120	A.13	
1H075130	A.13	
1H075140	A.13	
1H075210	A.13	
1H075220	A.13	
1H075230	A.13	
1H075240	A.13	
1H084910	A.13	
1H084920	A.13	
1H084930	A.13	
1H084940	A.13	
1H085110	A.13	
1H085120	A.13	
1H085130	A.13	
1H085140	A.13	
1H108710	A.13	
1H108720	A.13	
1H108730	A.13	
1H108740	A.13	
1H108810	A.13	
1H108820	A.13	
1H108830	A.13	
1H108840	A.13	
1H111302	A.13	
1H111304	A.13	
1H111306	A.13	
1H111810	A.13	
1H111820	A.13	
1H111830	A.13	
1H111840	A.13	
1H114210	A.13	
1H114220	A.13	
1H114230	A.13	
1H114240	A.13	
1H114410	A.13	
1H114420	A.13	
1H114430	A.13	
1H114440	A.13	
1H114510	A.13	
1H114520	A.13	
1H114530	A.13	
1H114540	A.13	
1H114610	A.13	
1H114620	A.13	
1H114630	A.13	
1H114640	A.13	
2H326	A.3	
2H2617	N.7	
2H3383	O.1	
2H4243	B.2	
2H4244	B.2	
2H4245	B.2	
2H4246	B.2	
2H4732	O.1	
2H4732	O.3	
2H4817	N.6	
2H4905	A.3	
2H8041	R.40	
3H544	E.2	
3H544	M.2	
3H547	E.2	
3H547	M.2	
3H550	E.2	
3H550	H.4	
3H550	M.2	
3H554	E.2	
3H576	A.7	
3H914	O.3	
3H921	N.5	
3H949	N.3	
3H950	A.21	
3H950	N.3	
3H952	N.2	
3H999	O.1	
3H1031	N.5	
3H1422	B.1	
3H1454	N.8	
3H1813	N.6	
3H1835	N.4	
3H1893	N.5	
3H1894	N.3	
3H1911	N.4	
3H2006	A.6	
3H2098	A.12	
3H2138	B.1	
3H2287	H.4	
3H2287	M.2	
3H2287	M.3	
3H2424	M.3	
3H2428	H.4	
3H2428	K.2	
3H2520	N.5	
3H2648	S.1	
3H2695	B.1	
3H2696	B.1	
3H2865	F.4	
3H2914	E.1	
3H2962	N.5	
3H3098	N.3	
7H1694	O.2	
7H1695	O.2	
7H1709	P.1	
7H1764	A.9	
7H1790	A.8	
7H1791	A.8	
7H1792	A.8	
7H1793	A.8	
7H1805	P.1	
7H1806	P.1	
7H1948	A.9	
7H1952	A.9	
7H1963	A.9	
7H1964	A.9	
7H1965	A.9	
7H1968	A.9	

Part Number Index—*continued*

Part Number	Page	Amdt. Number
7H1969	A.9	
7H1980	R.42	
7H1981	R.42	
7H1984	R.42	
7H1985	R.42	
7H1986	R.42	
7H1988	R.42	
7H1990	R.42	
7H1991	R.42	
7H1992	R.42	
7H1993	R.42	
7H1994	R.42	
7H1995	R.42	
7H1996	R.42	
7H1997	R.42	
7H1998	R.42	
7H1999	R.42	
7H3001	E.1	
7H3048	E.1	
7H3067	E.1	
7H3069	E.1	
7H3078	E.1	
7H3085	E.1	
7H3171	E.1	
7H3196	E.1	
7H3211	E.1	
7H3213	E.1	
7H3214	E.1	
7H3215	E.1	
7H3277	E.1	
7H3565	J.2	
7H3571	J.2	
7H3858	G.1	
7H3863	G.1	
7H3865	G.1	
7H3874	G.1	
7H3877	G.1	
7H3878	G.1	
7H3879	G.1	
7H3880	G.1	
7H5027	N.1	
7H5028	N.1	
7H5031	N.1	
7H5038	N.2	
7H5039	N.2	
7H5040	N.2	
7H5041	N.2	
7H5042	N.2	
7H5043	N.2	
7H5044	N.2	
7H5045	N.2	
7H5046	N.2	
7H5047	N.2	
7H5048	N.2	
7H5049	N.2	
7H5050	N.2	
7H5051	N.2	
7H5062	N.5	
7H5067	N.4	
7H5071	N.1	
7H5086	B.1	
7H5121	N.6	
7H5122	N.6	
7H5123	N.6	
7H5130	N.9	
7H5156	N.2	
7H5164	N.6	
7H5185	N.6	
7H5376	N.1	
7H5387	N.1	
7H5388	N.1	
7H5389	N.1	
7H5390	N.1	
7H5483	N.5	
7H5485	N.5	
7H5486	N.5	
7H5529	N.2	
7H5582	N.5	
7H6255	J.2	
7H7003	E.2	
7H7004	E.2	
7H7022	M.2	
7H7355	H.4	
7H7367	K.2	
7H7368	H.4	
7H7368	K.2	
7H7456	E.2	
7H7456	M.2	
7H7484	M.2	
7H7485	M.2	
7H7488	M.2	
7H7489	M.2	
7H7520	K.2	
7H7560	E.2	
7H7636	K.2	
7H7753	K.2	
7H7847	H.4	
7H7857	E.2	
7H7923	H.4	
7H7924	K.2	
7H7925	M.2	
7H7928	H.4	
7H7930	H.4	
7H7930	K.2	
7H7931	H.4	
7H7931	K.2	
7H7932	H.4	
7H7935	H.4	
7H7936	H.4	
7H7936	K.2	
7H7938	K.2	
7H7939	H.4	
7H7939	K.2	
7H7940	H.4	
7H7941	K.2	
7H7942	H.4	
7H7943	H.4	
7H7947	K.2	
7H7948	K.2	
7H7949	K.2	
7H7950	K.2	
7H7954	E.2	
7H7955	E.2	
7H7956	E.2	
7H7957	E.2	
7H7958	E.2	
7H7959	E.2	
7H7973	H.4	
7H7974	E.2	
7H7983	E.2	
7H9776	R.13	
7H9777	R.13	
7H9779	R.13	
7H9780	R.13	
7H9781	R.13	
7H9782	R.13	
7H9783	R.13	
7H9784	R.13	
7H9785	R.13	
7H9786	R.13	
7H9827	R.1	
7H9827	R.5	
7H9828	R.1	
7H9828	R.5	
7H9830	N.3	
7H9832	R.41	
7H9833	R.41	
7H9834	R.41	
7H9864	R.33	
7H9864	R.37	
7H9866	R.33	
7H9866	R.37	
7H9867	R.33	
7H9867	R.37	
7H9868	R.33	
7H9868	R.39	
7H9958	R.14	
7H9960	R.31	
7H9961	R.31	
7H9961	R.38	
7H9962	R.33	
7H9962	R.37	
7H9963	R.31	
7H9963	R.33	
7H9963	R.37	
7H9963	R.38	
7H9964	R.31	
12H137	A.6	
13H23	N.6	
13H138	N.5	
13H139	N.5	
13H140	N.5	
17H1	R.42	
17H2	R.42	
17H218	O.2	
17H219	O.2	
17H220	O.2	
17H221	O.2	
17H292	O.2	
17H293	O.2	
17H298	O.3	
17H299	O.3	
17H300	O.2	
17H341	A.14	
17H343	A.3	
17H518	R.42	
17H630	O.2	
17H756	O.2	
17H757	O.2	
17H827	R.42	
17H846	A.9	
17H847	A.9	
17H932	O.2	
17H932	O.3	
17H1068	O.3	
17H1343	O.2	
17H1346	O.2	
17H1446	A.9	
17H1447	A.9	
17H1448	A.9	
17H1449	A.9	
17H1481	O.3	
17H1556	A.9	
17H1557	A.9	
17H1558	A.9	

Part Number Index—*continued*

Part Number	Page	Amdt. Number
17H1559	A.9	
17H1712	A.8	
17H1821	O.3	
17H1940	R.43	
17H3806	G.1	
17H3811	J.2	
17H3818	G.1	
17H3819	G.1	
17H3839	J.2	
17H3840	J.2	
17H3841	J.2	
17H3868	G.1	
17H3873	J.2	
17H3874	J.2	
17H3875	J.2	
17H3908	G.1	
17H3925	J.2	
17H3928	G.1	
17H3955	G.1	
17H5049	B.1	
17H5064	B.1	
17H5065	B.1	
17H5066	B.1	
17H5069	B.1	
17H5071	B.1	
17H5093	B.1	
17H5095	B.1	
17H5106	B.1	
17H5118	B.1	
17H5144	N.5	
17H5146	N.5	
17H5147	N.5	
17H5205	N.5	
17H5217	N.1	
17H5244	N.5	
17H5255	N.9	
17H5301	O.1	
17H5302	O.1	
17H5305	N.5	
17H5306	N.5	
17H5308	N.5	
17H5309	N.5	
17H5330	N.5	
17H5375	N.5	
17H5388	N.9	
17H5389	N.9	
17H5390	N.9	
17H5396	N.9	
17H5400	N.6	
17H5401	N.6	
17H5421	B.1	
17H5422	B.1	
17H5423	B.1	
17H5428	N.5	
17H5431	N.9	
17H5432	N.9	
17H5441	N.9	
17H5442	N.9	
17H5444	N.2	
17H5474	B.1	
17H5483	N.3	
17H5484	N.3	
17H5485	N.3	
17H5505	B.1	
17H5512	N.9	
17H5513	N.9	
17H5514	N.9	
17H5530	N.1	
17H5543	N.5	
17H5546	N.5	
17H7109	M.2	
17H7203	H.4	
17H7480	M.2	
17H7526	M.3	
17H7571	M.2	
17H7707	H.4	
17H9510	R.38	
17H9735	R.14	
17H9736	R.14	
17H9737	R.14	
17H9738	R.14	
17H9739	R.14	
17H9740	R.14	
17H9741	R.14	
17H9742	R.14	
17H9743	R.14	
17H9744	R.14	
17H9745	R.14	
17H9746	R.13	
17H9747	R.13	
17H9748	R.13	
17H9930	R.14	
17H9934	R.16	
17H9935	R.15	
17H9935	R.16	
17H9989	R.14	
27H387	O.2	
27H887	O.3	
27H897	O.2	
27H972	O.3	
27H1391	O.2	
27H1393	O.2	
27H1801	O.2	
27H1860	O.2	
27H1861	O.2	
27H3157	E.1	
27H3159	E.1	
27H5253	N.5	
27H5278	N.3	
27H5314	B.1	
27H5354	N.5	
27H5511	N.3	
27H7164	H.4	
27H7394	H.4	
27H7395	H.4	
27H9622	R.13	
27H9623	R.13	
27H9624	R.13	
27H9625	R.13	
27H9626	R.13	
37H5056	N.10	
37H5057	N.10	
37H5169	N.9	
37H5181	O.1	
37H5181	O.3	
37H5272	B.1	
37H5273	B.1	
37H5308	N.9	
37H5426	O.1	
37H5437	N.9	
47H5124	N.5	
47H5125	N.5	
47H5126	N.5	
47H5166	O.3	
47H5188	N.3	
47H5365	N.5	
97H474	D.3	
97H496	R.38	
97H497	R.38	
97H498	R.38	
97H499	R.31	
97H499	R.38	
97H512	F.3	
97H626	N.1	
97H675	P.1	
97H676	P.1	
97H717	R.38	
97H2031	L.1	
97H2048	D.3	
97H2049	D.3	
97H2050	D.3	
97H2056	D.3	
H7336	R.11	
HBN0412	A.3	
HBN0412	A.8	
HBN0509	F.5	
HBN0522	F.5	
HBZ0408	M.3	
HBZ0408	R.17	
HBZ0409	D.2	
HBZ0416	D.3	
HBZ0422	A.18	
HBZ0422	D.3	
HBZ0436	M.1	
HBZ0509	A.11	
HBZ0509	F.1	
HBZ0509	J.2	
HBZ0510	M.4	
HBZ0512	A.11	
HBZ0512	K.3	
HBZ0513	A.7	
HBZ0513	A.12	
HBZ0518	J.3	
HBZ0522	A.18	
HBZ0610	R.12	
HBZ0613	N.2	
HBZ0615	E.2	
HBZ0616	R.20	
HBZ0620	R.20	
HBZ0622	M.1	
HBZ0624	M.2	
HBZ0728	L.1	
HBZ0730	R.21	
HBZ0732	R.21	
HBZ0826	A.17	
HCN0522	F.5	
HCZ0510	F.1	
HNS0406	A.3	
HNS0406	A.8	
HNS0407	A.8	
HNS0407	F.2	
HNS0408	A.8	
HNS0414	A.8	
HNS0506	Q.1	
HPZ0404	C.1	
HPZ0405	A.19	
HPZ0405	R.4	
HPZ0405	R.27	

Part Number Index—*continued*

Part Number	Page	Amdt. Number
HPZ0406	Q.1	
HPZ0406	R.3	
HPZ0406	R.7	
HPZ0408	R.3	
HPZ0408	R.7	
HPZ0505	J.3	
HPZ0506	Q.2	
HPZ0508	M.1	
HPZ0508	Q.2	
HPZ0508	R.3	
HPZ0508	R.7	
HPZ0510	Q.2	
HPZ0510	R.3	
HPZ0510	R.7	
HZS0403	A.7	
HZS0404	A.18	
HZS0404	R.16	
HZS0405	F.2	
HZS0405	M.4	
HZS0405	N.6	
HZS0405	R.3	
HZS0405	R.4	
HZS0405	R.7	
HZS0405	R.8	
HZS0405	R.18	
HZS0406	A.7	
HZS0406	A.12	
HZS0406	B.1	
HZS0406	O.3	
HZS0407	F.5	
HZS0407	N.8	
HZS0504	K.3	
HZS0504	M.4	
HZS0504	N.10	
HZS0505	A.18	
HZS0505	D.3	
HZS0505	H.5	
HZS0505	J.3	
HZS0505	K.4	
HZS0505	M.1	
HZS0505	M.3	
HZS0505	M.4	
HZS0505	N.8	
HZS0505	R.19	
HZS0506	A.7	
HZS0506	A.12	
HZS0506	D.7	
HZS0506	J.1	
HZS0506	J.3	
HZS0506	M.1	
HZS0506	N.7	
HZS0507	A.17	
HZS0507	C.1	
HZS0507	K.3	
HZS0507	M.1	
HZS0508	J.2	
HZS0508	K.3	
HZS0606	A.7	
HZS0606	A.17	
HZS0606	Q.1	
JA5732	F.5	
1K141	A.7	
1K204	B.2	
1K372	A.5	
1K800	A.5	
1K1382	A.8	
1K2141	A.10	
1K2142	A.10	
2K1356	F.1	
2K4608	A.1	
2K4608	A.5	
2K4909	F.2	
2K4909	F.5	
2K4954	A.7	
2K4958	A.7	
2K4958	A.11	
2K4958	F.1	
2K4971	F.1	
2K4974	A.11	
2K4975	A.7	
2K4982	A.9	
2K4992	A.1	
2K5163	A.10	
2K5164	A.10	
2K5197	A.7	
2K5319	A.3	
2K5319	A.6	
2K5319	A.7	
2K5319	A.8	
2K5319	A.11	
2K5319	A.12	
2K5319	E.1	
2K5319	F.1	
2K5319	F.2	
2K5319	F.5	
2K5380	F.1	
2K5863	F.4	
2K5896	A.11	
2K6192	B.2	
2K6193	B.2	
2K6534	F.5	
2K6633	A.3	
2K6804	A.5	
2K7140	A.7	
2K7420	F.3	
2K7435	H.1	
2K7440	A.7	
2K7477	H.2	
2K7993	H.1	
2K8158	F.1	
2K8160	H.3	
2K8169	A.1	
2K8450	A.11	
2K8568	A.8	
2K8623	A.1	
2K8645	N.1	
2K8686	E.2	
2K8686	M.3	
2K8938	H.1	
2K8960	F.3	
2K9932	A.12	
6K26	A.4	
6K49	A.11	
6K287	H.1	
6K499	F.1	
6K499	H.1	
6K501	A.10	
6K503	H.1	
6K528	F.3	
6K529	F.1	
6K629	A.3	
6K638	A.1	
6K638	A.8	
6K638	A.10	
6K639	A.10	
6K649	B.2	
6K650	B.2	
6K842	H.1	
6K871	A.5	
6K872	A.5	
6K874	A.1	
6K875	H.1	
6K878	A.5	
6K881	A.3	
6K884	F.4	
6K885	F.3	
6K886	F.3	
6K892	F.3	
6K899	A.1	
6K907	F.3	
6K908	F.3	
6K9012	F.1	
51K245	A.1	
51K246	A.1	
51K267	A.1	
51K881	A.5	
51K886	H.1	
51K889	A.1	
51K890	A.1	
51K893	A.5	
51K894	A.1	
51K1022	A.4	
51K1030	F.2	
51K1031	F.2	
51K1178	A.5	
51K1366	A.8	
51K1380	H.4	
51K1382	A.3	
51K1388	A.3	
51K3169	F.3	
52K485	F.1	
52K487	F.1	
52K531	A.5	
52K1206	A.4	
52K1226	F.1	
52K2017	B.1	
52K2037	F.1	
52K2171	A.4	
52K2286	A.16	
53K147	F.1	
53K149	N.2	
53K162	F.1	
53K249	A.7	
53K257	A.7	
53K371	A.6	
53K490	A.16	
53K1433	A.11	
53K2172	F.1	
LNN208	A.1	
LNZ103	R.17	
LNZ104	D.3	
LNZ104	O.3	
LNZ104	R.10	
LNZ105	A.17	
LNZ105	G.1	
LNZ105	M.4	
LNZ106	K.3	
LNZ106	M.4	

Part Number Index—*continued*

Part Number	Page	Amdt. Number
LNZ107	K.4	
LNZ108	A.17	
LNZ108	K.1	
LNZ110	K.1	
LNZ203	R.14	
LNZ204	R.15	
LNZ205	A.12	
LNZ205	J.2	
LNZ205	M.2	
LNZ205	R.41	
LNZ206	A.12	
LNZ208	K.1	
LWN105	A.7	
LWN107	H.1	
LWN204	A.7	
LWN204	A.8	
LWN204	B.1	
LWN204	F.2	
LWN205	A.7	
LWN206	A.12	
LWN206	N.2	
LWN208	A.1	
LWN208	L.1	
LWN304	A.6	
LWN304	A.8	
LWN304	F.2	
LWN306	A.12	
LWN404	M.2	
LWN604	A.3	
LWN604	F.2	
LWN605	A.8	
LWN710	E.2	
LWN710	M.3	
LWZ202	B.2	
LWZ202	O.1	
LWZ202	R.10	
LWZ202	R.17	
LWZ202	R.38	
LWZ203	A.19	
LWZ203	A.20	
LWZ203	C.1	
LWZ203	D.7	
LWZ203	M.5	
LWZ203	N.3	
LWZ203	N.4	
LWZ203	N.5	
LWZ203	N.6	
LWZ203	N.7	
LWZ203	N.9	
LWZ203	N.10	
LWZ203	O.1	
LWZ203	O.3	
LWZ203	Q.1	
LWZ203	R.1	
LWZ203	R.3	
LWZ203	R.4	
LWZ203	R.5	
LWZ203	R.7	
LWZ203	R.8	
LWZ203	R.9	
LWZ203	R.10	
LWZ203	R.11	
LWZ203	R.14	
LWZ203	R.17	
LWZ203	R.31	
LWZ203	R.36	
LWZ203	R.38	
LWZ203	R.40	
LWZ203	R.42	
LWZ203	R.43	
LWZ204	A.12	
LWZ204	A.18	
LWZ204	A.19	
LWZ204	C.1	
LWZ204	D.2	
LWZ204	D.3	
LWZ204	F.5	
LWZ204	K.3	
LWZ204	M.1	
LWZ204	M.3	
LWZ204	M.4	
LWZ204	N.6	
LWZ204	N.8	
LWZ204	N.9	
LWZ204	N.10	
LWZ204	O.2	
LWZ204	Q.1	
LWZ204	R.2	
LWZ204	R.3	
LWZ204	R.4	
LWZ204	R.6	
LWZ204	R.7	
LWZ204	R.8	
LWZ204	R.16	
LWZ204	R.17	
LWZ204	R.18	
LWZ204	R.19	
LWZ204	R.27	
LWZ205	A.16	
LWZ205	A.17	
LWZ205	A.18	
LWZ205	A.19	
LWZ205	C.1	
LWZ205	D.3	
LWZ205	D.7	
LWZ205	F.1	
LWZ205	H.1	
LWZ205	H.5	
LWZ205	J.1	
LWZ205	J.2	
LWZ205	J.3	
LWZ205	K.3	
LWZ205	K.4	
LWZ205	M.1	
LWZ205	M.3	
LWZ205	M.4	
LWZ205	M.5	
LWZ205	N.7	
LWZ205	N.8	
LWZ205	N.10	
LWZ205	Q.2	
LWZ205	R.3	
LWZ205	R.7	
LWZ205	R.19	
LWZ205	R.20	
LWZ206	A.16	
LWZ206	A.17	
LWZ206	E.2	
LWZ206	H.4	
LWZ206	H.5	
LWZ206	K.3	
LWZ206	M.1	
LWZ206	M.2	
LWZ206	Q.1	
LWZ206	R.12	
LWZ206	R.20	
LWZ206	R.21	
LWZ207	H.5	
LWZ207	L.1	
LWZ207	N.1	
LWZ207	R.21	
LWZ208	A.17	
LWZ208	K.3	
LWZ208	K.4	
LWZ208	R.20	
LWZ208	R.21	
LWZ212	F.3	
LWZ212	H.2	
LWZ304	F.2	
LWZ305	A.7	
LWZ305	F.1	
LWZ305	F.2	
LWZ306	A.7	
LWZ306	K.2	
LWZ403	R.2	
LWZ403	R.6	
MB19331	R.32	
MB19556	R.14	
MB19956	R.38	
MB21959	R.32	
MB22438	R.38	
NCS0509	F.5	
OES0708	S.1	
OES0910	S.1	
OES1112	S.1	
PCR0207	O.3	
PCR0307	M.3	
PCR0307	O.3	
PCR0309	M.3	
PCR0311	A.21	
PCR0311	M.3	
PCR0311	N.10	
PCR0407	N.10	
PCR0407	Q.1	
PCR0411	E.2	
PCR0507	M.5	
PCR0607	N.10	
PCR0709	N.10	
PCR0709	O.2	
PCR0709	R.9	
PCR0811	N.10	
PCR1007	N.10	
PCR1011	N.10	
PFS103	R.11	
PFS104	R.40	
PFS106	C.1	
PMP0514	R.41	
PMP0518	N.7	
PMZ0206	N.5	
PMZ0208	R.10	
PMZ0208	R.17	
PMZ0210	O.1	
PMZ0216	B.2	
PMZ0304	R.38	
PMZ0306	M.5	
PMZ0306	N.10	
PMZ0306	Q.1	
PMZ0306	R.38	
PMZ0307	N.3	

Part Number Index—*continued*

Part Number	Page	Amdt. Number
PMZ0307	O.3	
PMZ0308	A.19	
PMZ0308	N.3	
PMZ0308	N.4	
PMZ0308	N.6	
PMZ0308	N.7	
PMZ0308	N.10	
PMZ0308	Q.1	
PMZ0308	R.1	
PMZ0308	R.5	
PMZ0308	R.10	
PMZ0308	R.11	
PMZ0310	N.4	
PMZ0310	N.5	
PMZ0314	N.10	
PMZ0316	D.7	
PMZ0316	M.5	
PMZ0316	R.42	
PMZ0320	N.4	
PMZ0408	N.8	
PMZ0408	R.19	
PMZ0410	R.19	
PMZ0422	A.19	
PMZ0508	J.3	
PMZ0508	N.8	
PPZ0305	R.11	
PPZ0308	R.14	
PPZ0310	R.4	
PPZ0310	R.8	
PTP604	R.40	
PTZ603	R.10	
PTZ603	R.14	
PTZ604	R.3	
PTZ604	R.7	
PTZ604	R.36	
PTZ803	R.17	
PTZ1003	Q.1	
PTZ1005	Q.1	
PWN102	B.2	
PWN104	A.8	
PWN104	B.1	
PWN105	A.6	
PWN105	A.8	
PWN106	A.6	
PWN204	B.1	
PWP105	N.7	
PWZ103	C.1	
PWZ103	M.4	
PWZ103	N.6	
PWZ103	O.1	
PWZ104	A.18	
PWZ104	A.19	
PWZ104	A.20	
PWZ104	D.3	
PWZ104	D.6	
PWZ104	M.4	
PWZ104	O.3	
PWZ104	Q.1	
PWZ104	R.3	
PWZ104	R.7	
PWZ104	R.19	
PWZ105	A.4	
PWZ105	A.6	
PWZ105	A.18	
PWZ105	C.1	
PWZ105	E.2	
PWZ105	F.1	
PWZ105	M.4	
PWZ105	Q.2	
PWZ105	R.3	
PWZ105	R.7	
PWZ105	R.10	
PWZ105	R.17	
PWZ105	R.19	
PWZ105	R.41	
PWZ106	A.16	
PWZ106	K.3	
PWZ106	R.12	
PWZ106	R.20	
PWZ107	J.2	
PWZ107	K.4	
PWZ107	L.1	
PWZ107	M.4	
PWZ107	R.21	
PWZ110	K.1	
PWZ202	R.17	
PWZ202	R.10	
PWZ202	R.36	
PWZ202	R.38	
PWZ203	Q.1	
PWZ203	R.1	
PWZ203	R.2	
PWZ203	R.3	
PWZ203	R.5	
PWZ203	R.6	
PWZ203	R.7	
PWZ203	R.10	
PWZ203	R.12	
PWZ203	R.14	
PWZ203	R.17	
PWZ203	R.31	
PWZ203	R.36	
PWZ203	R.38	
PWZ203	R.40	
PWZ204	C.1	
PWZ204	M.4	
PWZ204	N.6	
PWZ204	N.9	
PWZ204	R.2	
PWZ204	R.3	
PWZ204	R.4	
PWZ204	R.6	
PWZ204	R.7	
PWZ204	R.8	
PWZ204	R.15	
PWZ204	R.16	
PWZ204	R.18	
PWZ205	G.1	
PWZ205	J.3	
PWZ205	M.1	
PWZ205	M.4	
PWZ205	Q.2	
PWZ205	R.3	
PWZ205	R.7	
PWZ206	H.5	
PWZ206	Q.1	
PWZ206	Q.2	
PWZ206	R.21	
PWZ208	R.20	
PWZ208	R.21	
RFN110	R.14	
RFN204	R.40	
RFR103	A.21	
RFR103	N.6	
RFR104	N.6	
RFR110	N.5	
RFR204	R.40	
RFR208	R.40	
RMP0204	R.15	
RMP0208	R.38	
RMP0307	R.39	
RMP0308	R.14	
RMP0310	O.1	
RMP0310	R.12	
RMP0310	R.40	
RMP0312	R.12	
RPP0312	R.12	
RPZ0310	R.2	
RPZ0310	R.6	
RTP404	R.31	
RTP404	R.36	
RTP404	R.38	
RTP407	R.31	
RTP603	R.38	
RTP605	R.31	
RTP605	R.32	
RTP606	R.36	
RTP804	R.40	
RTP805	R.32	
RTP806	R.41	
RTZ804	R.2	
RTZ804	R.6	
UHN105	J.2	
UHN205	J.2	
UHN400	G.1	
UHN405	J.2	
UHN405	K.1	
WKN304	A.4	
WKN304	A.4	
WKN304	F.3	
WKN404	F.2	
WKN404	N.1	
WKN505	A.3	
WKN506	K.1	
X19546	C.1	
2715	D.2	
2718	D.2	
5843	R.11	
7700	R.36	
7701	R.31	
7701	R.36	
7722	N.3	
45223	B.2	
47325	J.4	
47327	J.4	
47330	J.4	
53626	D.2	
54516	D.3	
64401	R.9	
68701	M.2	
80641	M.4	

Part Number Index—*continued*

Part Number	Page	Amdt. Number	Part Number	Page	Amdt. Number	Part Number	Page	Amdt. Number	Part Number	Page	Amdt. Number
81614	P.1		181756	S.1							
81615	P.1		182143	R.40							
81756	M.4		183599	R.9							
83866	O.3		184166	O.1							
83875	O.3		184448	H.5							
84138	O.3		185393	G.1							
84180	A.19		185794	E.2							
94605	R.9		185794	M.1							
95219	R.17		185795	M.1							
95482	D.3		185798	M.1							
95621	C.1		185925	N.9							
126900	K.3		186890	S.1							
126902	K.3		271601	R.17							
126903	K.3		300398	R.43							
126905	K.3		301020	H.4							
126908	K.3		301140	R.43							
126914	K.3		301549	M.2							
126915	K.3		301550	M.2							
126920	J.1		301551	M.2							
126921	J.1		500822	K.3							
126922	J.1		500823	K.3							
126926	J.1		500946	R.19							
127657	K.3										
128355	D.2										
128900	R.10										
128900	R.17										
128978	R.10										
130154	E.2										
130383	R.21										
130462	J.4										
130463	J.4										
130795	J.1										
130801	J.1										
133213	R.17										
133221	R.10										
133221	R.17										
133222	R.10										
133222	R.17										
135448	N.8										
135761	N.8										
136271	R.19										
139105	K.3										
139282	R.10										
139282	R.17										
140677	H.3										
140677	K.2										
180079	C.1										
180260	R.40										
180603	P.1										
180604	P.1										
180605	P.1										
180606	P.1										

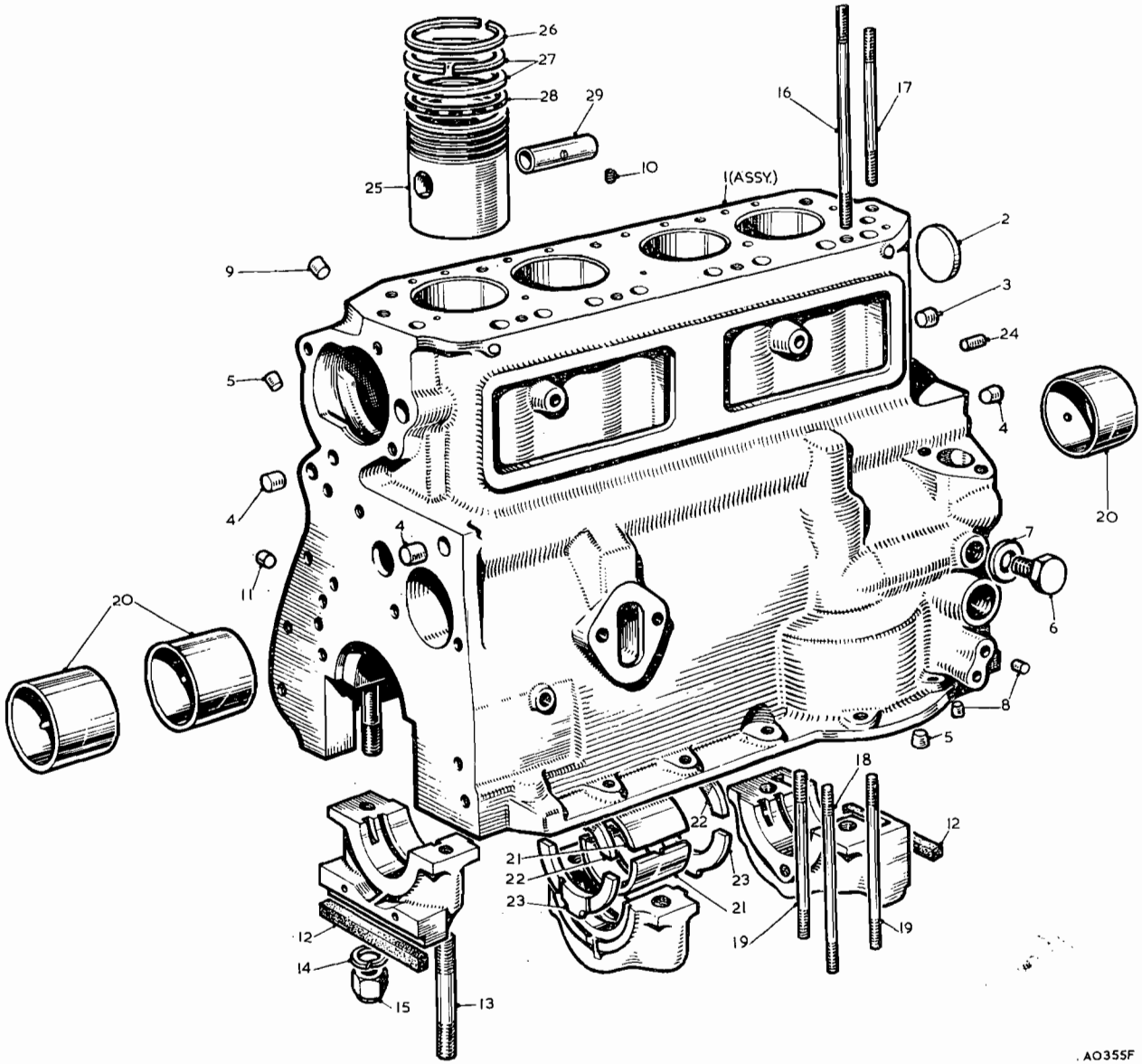
26
27
28
29
16
17
25
10
1(ASSY.)
2
9
3
24
5
4
4
20
4
7
11
6
20
8
5
18
22
12
21
22
23
23
21
12
19
19
14
15
13
AO355F

Item No.	DESCRIPTION	Commencing (E) GB101 Part Number	Illus. No.	Qty. per Vehicle RHD	LHD	Unit of Issue	Type of Vehicle	MODIFICATIONS New Part Number	Change Point	Amdt. No.	REMARKS
	ENGINE										
	ENGINE UNIT										
1	**Stripped engine unit**	**8G207**		**1**	**1**			**8G210**	**Com. (E) GB259**		
								48G165	**] Com. (E) GD101**		
2	**Short block assembly**	**48G39**		**1**	**1**			**48G166**	**]**		**When supplying 48G39 prior to (E) GB259 always supply in addition 1 off each 11G93 cover, 11G95 washer, 11G96 plate, 11G97 washer, 11G136 plate, 11G203 gear, 17H343 tensioner, and AEC339 joint**
3	**Cylinder block and piston assembly**	**48G44**	**A1**	**1**	**1**			**48G38**	**Com. (E) GB259**		**When supplying 48G38 prior to (E) GB46342 always supply in addition 1 off 51K889 stud and 2 off 51K890 stud**
								48G151	**Com. (E) GD101**		
4	Plug—welch (large)	2K8169	A2	4	4						
5	Plug—crankcase oil gallery	1H813	A3	1	1						
6	Plug—crankcase oil gallery	2K8623	A4	3	3						
7	Plug—crankcase oil hole (taper)	6K874	A5	2	2						
8	Plug—transverse oil hole (screwed)	2K4992	A6	1	1						
9	Washer for plug	6K638	A7	1	1	12					
10	Plug—oil relief valve vent holes	6K899	A8	2	2						
11	Plug—oil hole—oil filter boss	11G14	A9	1	1						
12	Plug—redundant dipper rod boss and rear main bearing cap	2K4608	A10	2	2	12			Fin. (E) GB40104		
13	Plug—redundant dipper rod boss			1	1			2K4608	Com. (E) GB40105		
14	Plug—chain tensioner oil feed		A11	1	1			11G14	Com. (E) GB259		
15	Joint for front and rear main bearing caps	1H353	A12	2	2	12					
16	Stud for main bearing cap	51K894	A13	6	6						
17	Washer (spring) main bearing cap stud	LWN208	A14	6	6						
18	Nut for main bearing stud	LNN208	A15	6	6						
19	Stud for cylinder head (long)	51K245	A16	4	4						
20	Stud for cylinder head (short)	51K246	A17	7	7						
21	Stud for oil pump (long)	51K889	A18	1	1				] Fin. (E) GB46044		
22	Stud for oil pump (short)	51K890	A19	2	2				] except 46101 to 46341		
23	Stud for oil pump			3	3			51K267	Com. (E) GB46045 to 46100, then 46342 on		
24	**Liner for camshaft bearing**	**8G2176**	**A20**	**1 set**	**1 set**	**1**					
25	**Bearing—main (standard)**	**8G2081**	**A21**	**1 set**	**1 set**	**1**		**8G2175**	**Com. (E) GB3511**		

Item No.	DESCRIPTION	Commencing (E) GB101 Part Number	Illus. No.	Qty. per Vehicle RHD	Qty. per Vehicle LHD	Unit of Issue	Type of Vehicle	MODIFICATIONS New Part Number	MODIFICATIONS Change Point	MODIFICATIONS Amdt. No.	REMARKS
	Engine Unit—*continued*										
1	Washer—thrust (upper)	1G2331	A22	2	2	12					
2	Washer—thrust (lower)	1G2332	A23	2	2	12					
3	Dowel for gearbox mounting plate	1G752	A24	2	2						
4	**Piston assembly (standard)**	**1H749**	**A25**	**4**	**4**			**1H849** **1H1087** **1H1118** **1H1142**	**Com. (E) GB5682** **Com. (E) GB27909** **Com. (E) GB38484** **Com. (E) GB40825**		**Prior to (E) GB40825 1H1142 is interchangeable in sets only. Rings 1H1144 and 1H1145 must not be fitted**
5	Ring—compression (top)	1H751	A26	4	4			1H851 1H1088 1H1144	Com. (E) GB5682 Com. (E) GB27909		
6	Ring—compression (taper)	1H752	A27	8	8	8		1H1145	Com. (E) GB40825		
7	Ring—scraper	1H711	A28	4	4			1H1146			
8	Pin—gudgeon	1H577	A29	4	4			1H1113	Com. (E) GB38484		

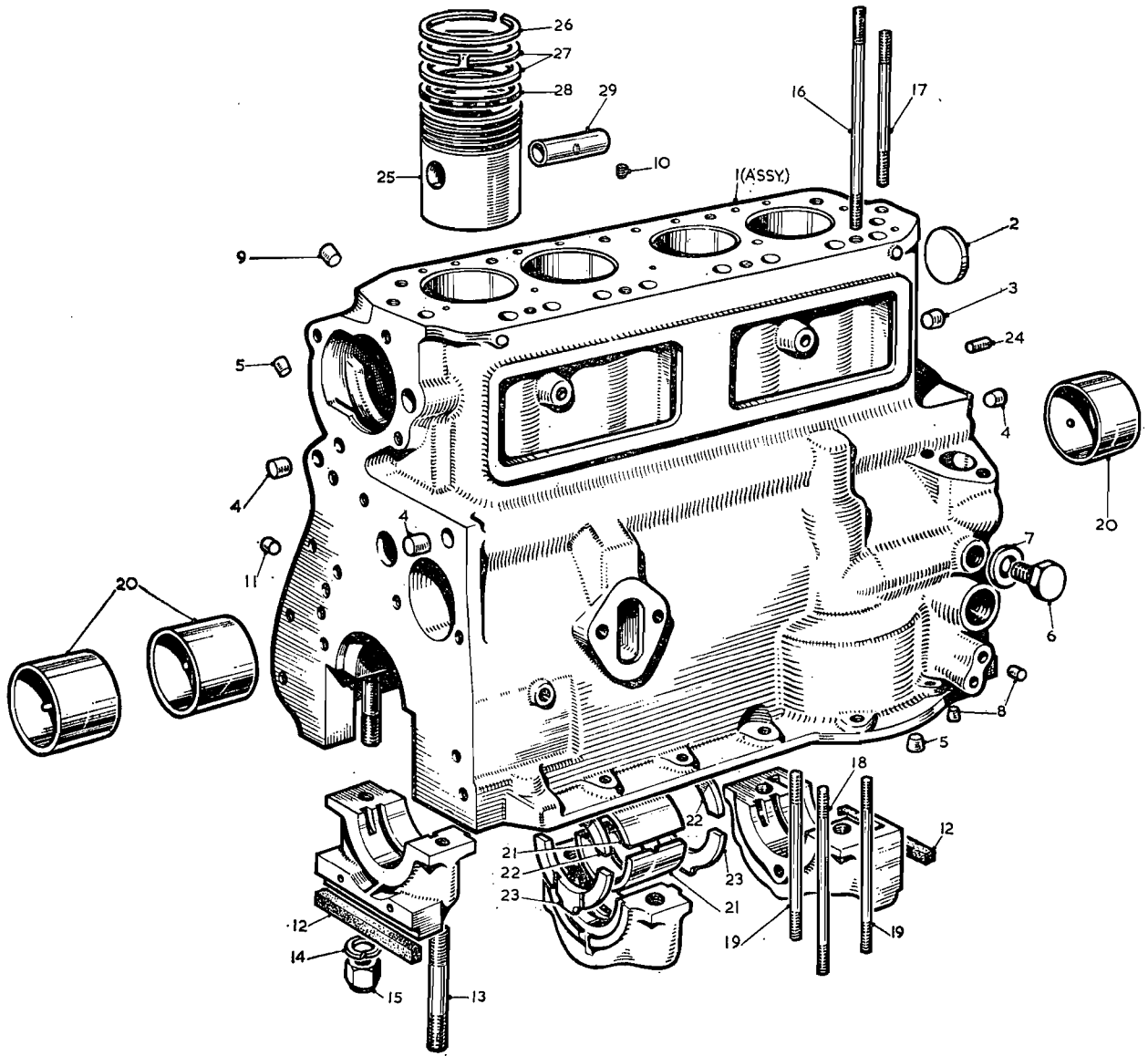

To face page A.2

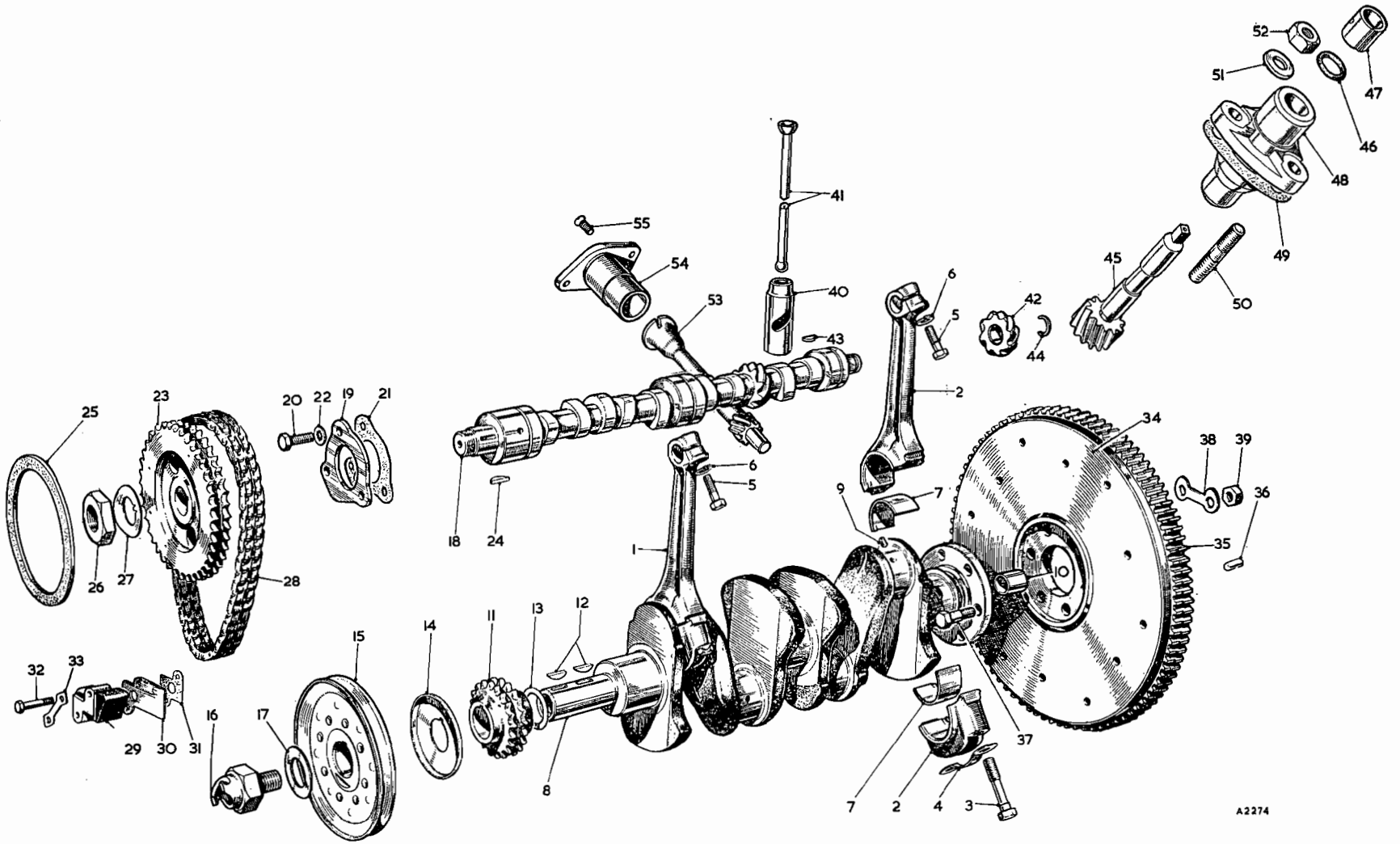

To face page A.3

Item No.	DESCRIPTION	Commencing (E) GB101 Part Number	Illus. No.	Qty. per Vehicle RHD	Qty. per Vehicle LHD	Unit of Issue	Type of Vehicle	MODIFICATIONS New Part Number	MODIFICATIONS Change Point	MODIFICATIONS Amdt. No.	REMARKS
	CONNECTING RODS—BEARINGS										
1	**Connecting rod and cap for Nos. 1 and 3 cylinders**	**1G2370**	**AA1**	**2**	**2**			**1H703**	**Com. (E) GB8570**		**Prior to (E) GB8570 supply in sets only**
2	**Connecting rod and cap for Nos. 2 and 4 cylinders**	**1G2367**	**AA2**	**2**	**2**			**1H701**			
3	Screw for cap	51K1388	AA3	8	8						
4	Washer for screw (lock)	6K881	AA4	4	4						
5	Screw—gudgeon pin clamp	51K1382	AA5	4	4	12					
6	Washer for clamping screw (spring)	2K5319	AA6	4	4						
7	**Bearing for connecting rod (standard)**	**8G2137**	**AA7**	**1 set**	**1 set**	1		**8G2285**	**Com. (E) GD6530**		
	CRANKSHAFT—GEAR										
8	**Crankshaft with oil restrictor and bush**	**1H753**	**AA8**	**1**	**1**						
9	Restrictor—oil	1G1167	AA9	4	4	12					
10	Bush for 1st motion shaft	1G765	AA10	1	1	12					
11	**Gear—crankshaft**	**1A2028**	**AA11**	**1**	**1**						
12	Key—crankshaft gear and pulley	2H326	AA12	2	2	12					
13	Washer for crankshaft gear (packing)	2K6633	AA13	A/R	A/R						
14	Oil thrower—crankshaft (front)	1A1546	AA14	1	1						
15	**Pulley—crankshaft**	**11G81**	**AA15**	**1**	**1**						
16	Nut—starting dog	1H765	AA16	1	1						
17	Washer for starting nut (lock)	1G1319	AA17	1	1						
	CAMSHAFT—GEAR										
18	**Camshaft**	**1H729**	**AA18**	**1**	**1**						**Alternatives**
19	**Camshaft**	**1H1435**		**1**	**1**						
20	Plate—camshaft locating	1A2032	AA19	1	1				Fin. (E) GB258		Alternatives
21	Plate—camshaft locating	1G1361		1	1			11G136	Com. (E) GB259		
22	Screw—locating plate to crankcase	HNS0406	AA20	3	3						
23	Joint—camshaft locating plate	11G99	AA21	1	1				Fin. (E) GB258		
24	Washer for screw (shakeproof)	LWN604	AA22	3	3						
25	**Gear—camshaft**	**1G2340**	**AA23**	**1**	**1**			**11G203**	**Com. (E) GB259**		
26	Key for gear	WKN505	AA24	1	1						
27	Tensioner ring for gear	8G549	AA25	1	1	12			Fin. (E) GB258		
28	Nut for camshaft gear	6K629	AA26	1	1						
29	Washer for nut (lock)	2A759	AA27	1	1						
30	**Chain—timing**	**2H4905**	**AA28**	**1**	**1**						
31	**Tensioner—chain (with Allen key)**		**AA29**	**1**	**1**			**17H343**			
32	Backplate for tensioner		AA30	1	1			AJC5033			
33	Joint for tensioner		AA31	1	1	12		AEC339	Com. (E) GB259		
34	Screw for tensioner		AA32	2	2			HBN0412			
35	Washer for screw (lock)		AA33	1	1			AEC340			

Item No.	DESCRIPTION	Commencing (E) GB101 Part Number	Illus. No.	Qty. per Vehicle RHD	Qty. per Vehicle LHD	Unit of Issue	Type of Vehicle	MODIFICATIONS New Part Number	MODIFICATIONS Change Point	MODIFICATIONS Amdt. No.	REMARKS
	FLYWHEEL										
1	**Flywheel with starter ring and dowels**	**1H651**	**AA34**	1	1						
2	Ring—starter gear	1G2874	AA35	1	1						
3	Dowel—clutch to flywheel	1G2984	AA36	2	2						
4	Bolt—flywheel to crankshaft	51K1022	AA37	6	6						
5	Washer for bolt (lock)	6K26	AA38	3	3						
6	Nut for flywheel bolt	FNZ506	AA39	6	6						
	TAPPETS AND PUSH-RODS										
7	Tappet—valve	1H744	AA40	8	8			1H822	] Com. (E) GB5504		
8	Push-rod	1G2380	AA41	8	8			11G241	]		
	TACHOMETER DRIVE										
9	**Gear for tachometer drive**	**1H730**	**AA42**	1	1						
10	Key for gear	WKN304	AA43	1	1						
11	Spring ring for gear	1H605	AA44	1	1						
12	**Pinion for tachometer drive**	**1H721**	**AA45**	1	1						
13	Oil seal for pinion	1G2398	AA46	1	1						
14	Retaining ring	1G2399	AA47	1	1						
15	Housing for pinion	1H591	AA48	1	1						
16	Joint washer for housing	1G2401	AA49	1	1						
17	Stud for tachometer pinion housing	52K2171	AA50	2	2						
18	Washer for housing stud	PWZ105	AA51	2	2						
19	Nut for housing stud	FNZ105	AA52	2	2						
	DISTRIBUTOR DRIVE SPINDLE										
20	Spindle—distributor drive	2A139	AA53	1	1						] Alternatives
21	Spindle—distributor drive	2A847		1	1						]
	DISTRIBUTOR MOUNTING										
22	Housing for distributor	1G2285	AA54	1	1						
23	Screw—housing to crankcase	52K1206	AA55	1	1						

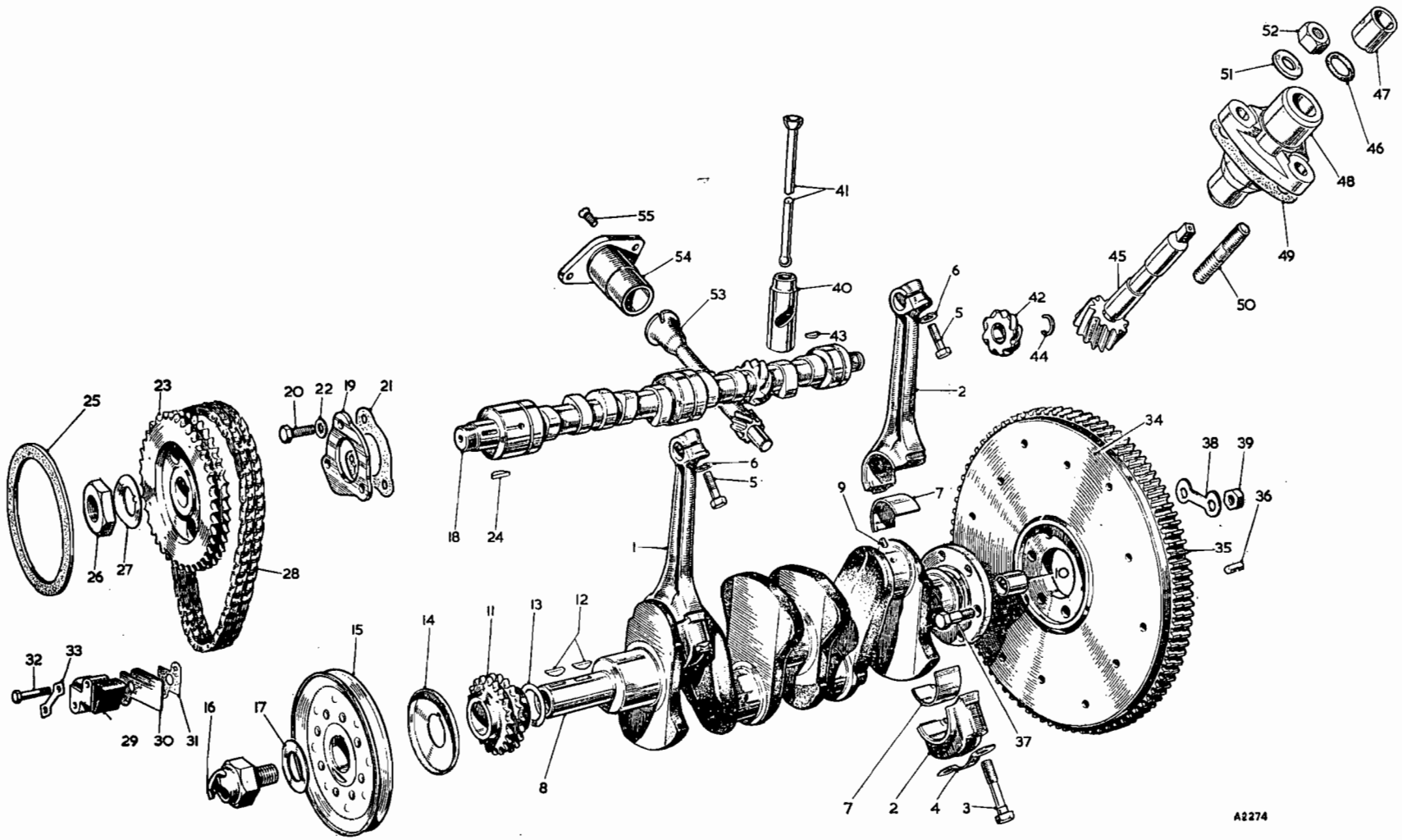

To face page A.4

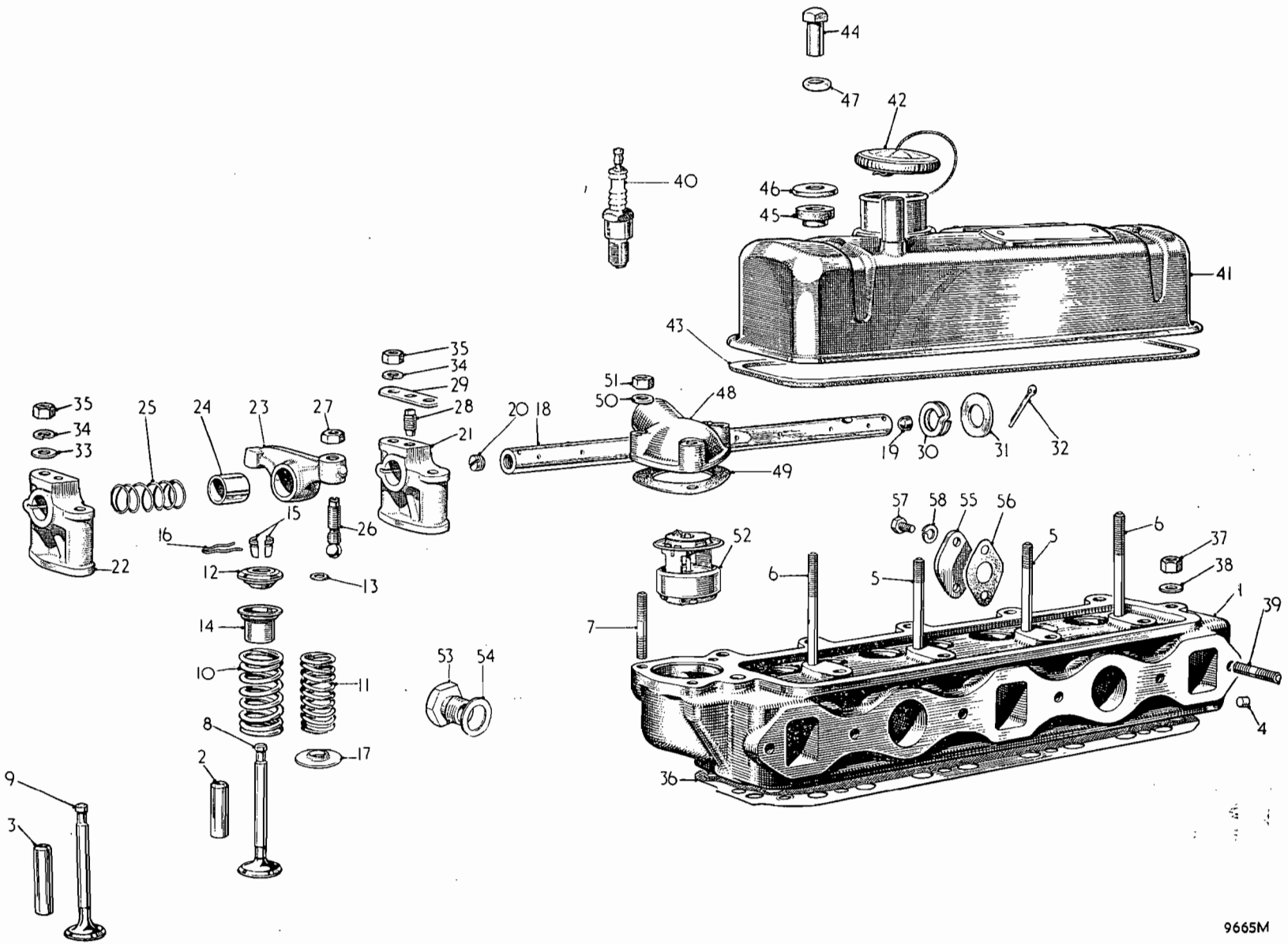
44
47
42
40
46
45
41
43
35
34
29
28
21
20
18
51
50
48
49
19
30
31
32
35
34
33
25
24
23
27
15
16
26
22
12
13
14
10
11
8
2
17
9
3
53
54
57
58
55
56
52
6
5
37
38
1
39
7
4
36
9665M

Item No.	DESCRIPTION	Commencing (E) GB101 Part Number	Illus. No.	Qty. per Vehicle RHD	Qty. per Vehicle LHD	Unit of Issue	Type of Vehicle	MODIFICATIONS New Part Number	MODIFICATIONS Change Point	MODIFICATIONS Amdt. No.	REMARKS
	CYLINDER HEAD—VALVES—GUIDES—SPRINGS—ROCKERS										
1	**Cylinder head assembly (less rocker gear)**	**48G31**		1	1						
2	**Cylinder head assembly (with valve guides)**	**1H1060**	**AB1**	1	1						
3	Guide—inlet valve	1G2882	AB2	4	4	12		11G313	Com. (E) GB23175 except 23201 to 23447		
4	Guide—exhaust valve	11G193	AB3	4	4	12					
5	Plug for oil hole	6K872	AB4	1	1						
6	Stud for rocker bracket (short)	51K881	AB5	2	2						
7	Stud for rocker bracket (long)	51K893	AB6	2	2						
8	Stud for water outlet elbow	52K531	AB7	3	3						
9	**Valve—inlet**	**1H1059**	**AB8**	4	4	4					
10	**Valve—exhaust**	**1H686**	**AB9**	4	4	4					] **Alternative**
11	Valve—exhaust (hard-faced)	1H1025		4	4						
12	Spring—valve—outer	1H722	AB10	8	8	8					
13	Spring—valve—inner	1H723	AB11	8	8	8					
14	Shroud and oil seal retainer—valve guide	1H725	AB12	8	8			1H1320	Com. (E) GD101		
15	Ring—valve packing	AEK113	AB13	8	8	144					
16	Cup—valve spring	1H724	AB14	8	8	12		1H1319	Com. (E) GD101		
17	Cotter—valve (halves)	1K800	AB15	16	16	26prs.					
18	Circlip for valve cotters	1K372	AB16	8	8	72					
19	Collar for valve spring (bottom)	1H726	AB17	8	8			1H1321	Com. (E) GD101		
20	**Shaft assembly—valve rocker**	**1G2522**		1	1						
21	**Shaft—valve rocker (plugged)**	**11G62**	**AB18**	1	1						
22	Plug—valve rocker shaft (plain)	6K878	AB19	1	1						
23	Plug—valve rocker shaft (screwed)	2K4608	AB20	1	1	12					
24	Bracket for rocker shaft (tapped)	11G218	AB21	1	1			1H1419	] Com. (E) GB48911		
25	Bracket for rocker shaft (plain)	11G219	AB22	3	3			1H1420			
26	**Rocker for valve (bushed)**	**11G45**	**AB23**	8	8						
27	Bush for valve rocker	1G2295	AB24	1	1	12					
28	Spring—rocker spacing	6K871	AB25	3	3						
29	Screw—tappet adjusting	11G47	AB26	8	8						
30	Locknut—tappet adjusting screw	FNN605	AB27	8	8			51K1178	Com. (E) GB47901		
31	Screw for rocker shaft (locating)	2A258	AB28	1	1						
32	Plate—screw locking	2A259	AB29	1	1						
33	Washer for rocker shaft (spring)	1A2139	AB30	2	2						
34	Washer for rocker shaft (plain)	2K6804	AB31	2	2						
35	Split pin for rocker shaft	CPS0308	AB32	2	2						

Item No.	DESCRIPTION	Commencing (E) GB101 Part Number	Illus. No.	Qty. per Vehicle RHD	Qty. per Vehicle LHD	Unit of Issue	Type of Vehicle	MODIFICATIONS New Part Number	MODIFICATIONS Change Point	MODIFICATIONS Amdt. No.	REMARKS
	Cylinder Head—Valves—Guides—Springs—Rockers—*continued*										
1	Washer for studs (plain)	PWN105	AB33	3	3	12					
2	Washer for studs (spring)	2K5319	AB34	4	4						
3	Nut for rocker bracket studs	FNN105	AB35	4	4						
4	Joint washer for cylinder head	1H1049	AB36	1	1						
5	Nut for cylinder head studs (in cylinder block)	53K371	AB37	11	11						
6	Washer for nut (plain)	PWN106	AB38	11	11						
7	Stud for exhaust manifold	FLS2513	AB39	2	2						
8	**Plug—sparking**	**3H2006**	**AB40**	4	4						
	VALVE ROCKER COVER—OIL FILLER										
9	**Cover—valve rocker (with filler cap)**	**1H573**	**AB41**	1	1						
10	Cap and cable for oil filler	8G612	AB42	1	1						
11	Joint washer for valve rocker cover	11G300	AB43	1	1	12		12H38	Com. (E) GD101		] Alternatives
12	Joint washer for valve rocker cover	1H1329		1	1						
13	Nut for rocker cover (cap)	2A150	AB44	2	2						
14	Bush for cover (rubber)	2K8568	AB45	2	2	36					
15	Washer for cap nut (cup)	1A2156	AB46	2	2						
16	Distance piece for rocker cover stud	1B2925	AB47	2	2						
	WATER OUTLET ELBOW—THERMOSTAT										
17	**Elbow—water outlet**	**12H137**	**AB48**	1	1			**1H727**	] **Com. (E) GB7538**		
18	Joint washer for elbow	12A109	AB49	1	1	12		1A2149			
								12A29	Com. (E) GD101		
19	Washer for stud	PWZ105	AB50	3	3						
20	Nut for stud	FNZ105	AB51	3	3						
21	**Thermostat**	**11G133**	**AB52**	1	1			**11G291**	**Com. (E) GB17538**		**Always use 11G291**
22	Joint—thermostat	1G1365		1	1				Fin. (E) GB17537		
23	Plug for thermal transmitter boss	1G2953	AB53	1	1						
24	Washer for plug	1B3664	AB54	1	1						
25	Plate—blanking—cylinder head side	1G1282	AB55	1	1						
26	Joint washer for blanking plate	1G2342	AB56	1	1	12					
27	Screw—blanking plate to cylinder head	HZS0404	AB57	2	2						
28	Washer for screw (spring)	LWN204	AB58	2	2			LWN304	Com. (E) GD101		

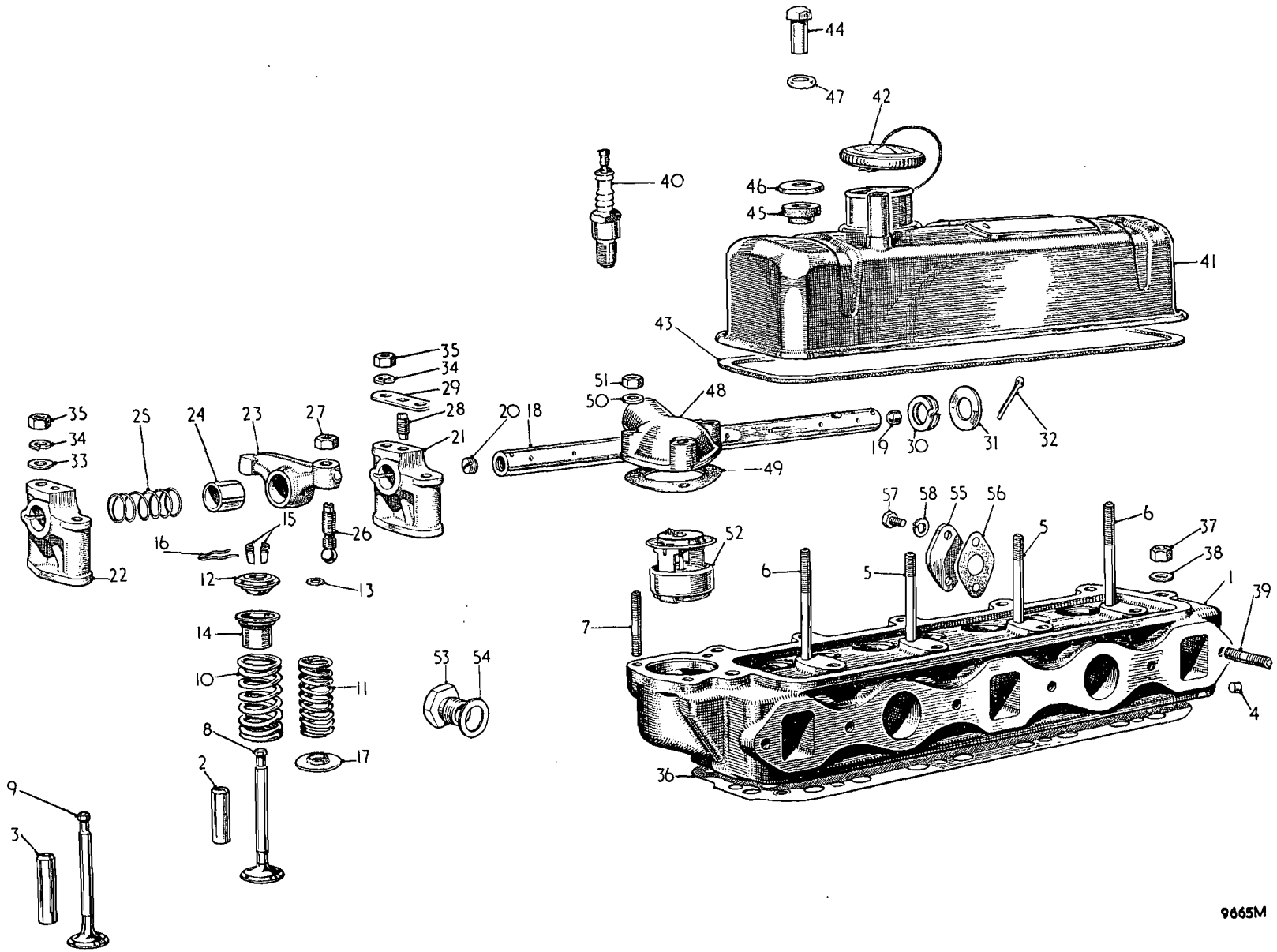

To face page A.6

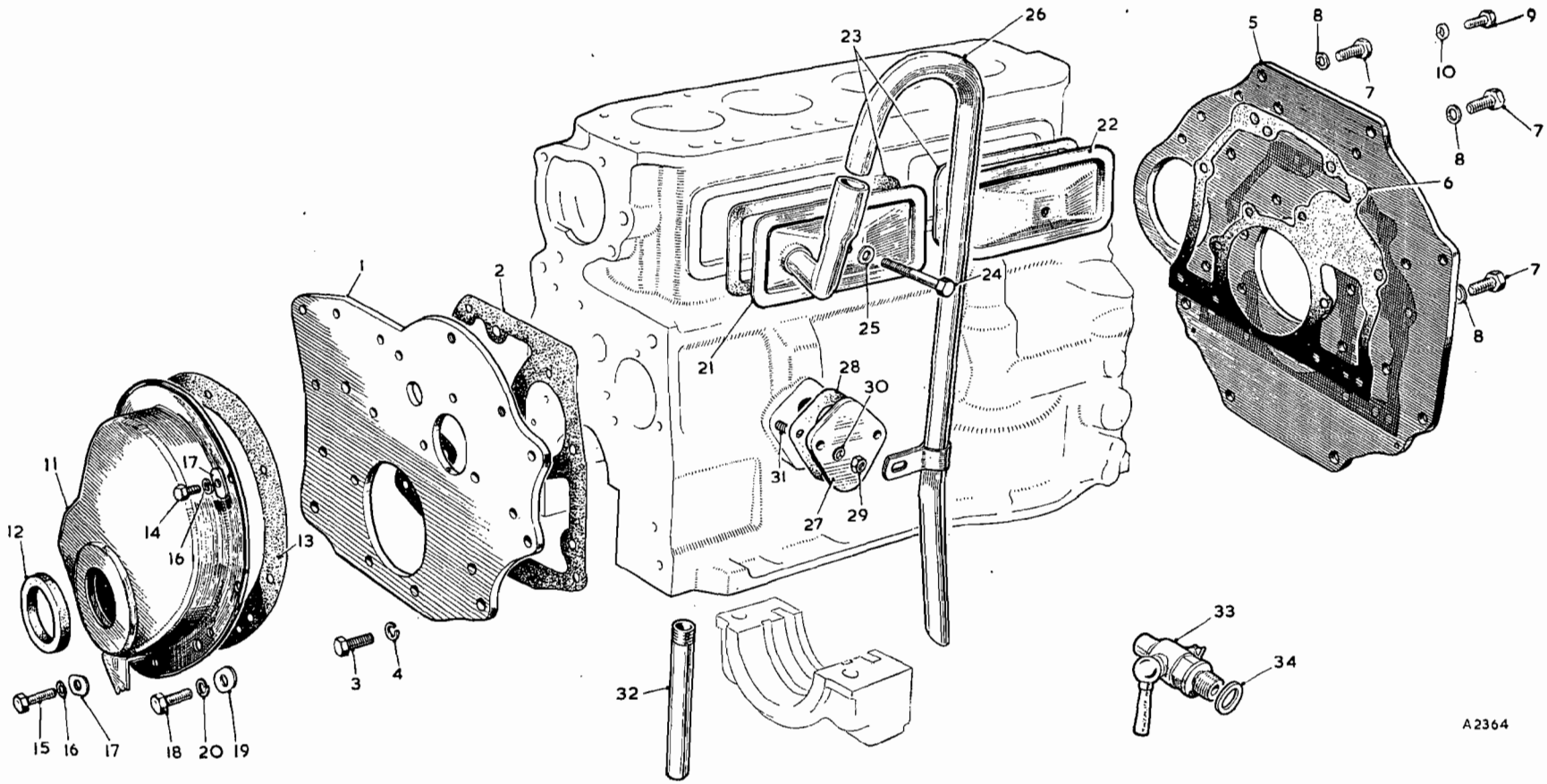

To face page A.7

Item No.	DESCRIPTION	Commencing (E) GB101 Part Number	Illus. No.	Qty. per Vehicle RHD	Qty. per Vehicle LHD	Unit of Issue	Type of Vehicle	MODIFICATIONS New Part Number	MODIFICATIONS Change Point	MODIFICATIONS Amdt. No.	REMARKS
	ENGINE MOUNTING PLATE										
1	**Plate—engine mounting (front)**	**1G2393**	**AC1**	1	1			**11G96**	**Com. (E) GB259**		
2	Joint—mounting plate to crankcase	1G2394	AC2	1	1	12		11G97			
3	Screw—mounting plate to crankcase	HZS0506	AC3	5/3	5/3						Quantity reduced at (E) GB259
4	Washer for screw (spring)	2K5319	AC4	5/3	5/3						
5	**Plate—engine mounting (rear)**	**1H770**	**AC5**	1	1			**1H821**	**Com. (E) GD101**		
6	Joint—rear mounting plate	1G2425	AC6	1	1	12					
7	Screw—rear plate to crankcase	HZS0606	AC7	8	8						
8	Lock washer for screw	LWZ306	AC8	8	8						
9	Screw—rear plate to crankcase	HZS0506	AC9	4	4						
10	Lock washer for screw	LWZ305	AC10	4	4						
	CYLINDER FRONT AND SIDE COVERS										
11	**Cover—front (with oil catcher and felt)**	**2A552**	**AC11**	1	1			**11G93**	**Com. (E) GB259**		
12	Ring—crankcase front cover (felt)	2K7140	AC12	1	1						
13	Joint—front cover to crankcase	1A2093	AC13	1	1	12		11G95	Com. (E) GB259		
14	Screw—cover to engine front plate	HZS0403	AC14	3	3						
15	Screw—cover to main bearing cap	HZS0406	AC15	2	2						
16	Washer for screw (spring)	LWN204	AC16	5	5						
17	Washer for screw (plain)	2K5197	AC17	5	5	24					
18	Screw—cover to crankcase	HZS0506	AC18	4	4						
19	Washer for screw	2K7440	AC19	4	4						
20	Washer for screw (spring)	LWN205	AC20	4	4						
21	**Cover—cylinder side (with elbow)**	**1H771**	**AC21**	1	1			**1H873**	**Com. (E) GB35809**		
22	**Cover—cylinder side**	**1A2198**	**AC22**	1	1			**2A770**	**Com. (E) GB11935**		
23	Joint for side covers	1A2203	AC23	2	2	12					
24	Screw for side cover	HBZ0513	AC24	2	2						
25	Washer for screw	2K4958	AC25	2	2	36					
26	Pipe—crankcase vent (with clip)	1H774	AC26	1	1			1H871	Com. (E) GB35809		
27	Distance piece—vent pipe clip to crankcase			1	1			1H840			
28	Screw—vent pipe to crankcase			2	2			HZS0506	Com. (E) GD101		
29	Washer for screw spring			2	2			LWZ305			
30	Plate—blanking—petrol pump facing	1G2443	AC27	1	1				Fin. (E) GB51767		
31	Joint for petrol pump blanking plate	1G2444	AC28	1	1	12					
32	Nut for blanking plate stud	FNZ105	AC29	2	2						
33	Washer for stud (spring)	LWN105	AC30	2	2						
34	Stud—L/H-side crankcase blanking plate	53K249	AC31	2	2			53K257	Com. (E) GB707 Fin. (E) GB51767		
	DRAIN TAP—DRAIN PIPE										
35	Pipe—drain (in rear bearing cap)	1K141	AC32	1	1				Fin. (E) GB40104		
36	Tap—water drain	3H576	AC33	1	1						
37	Washer for drain tap	2K4954	AC34	1	1	36					Alternatives
38	Washer for drain tap	2K4975		1	1						

Item No.	DESCRIPTION	Commencing (E) GB101 Part Number	Illus. No.	Qty. per Vehicle RHD	Qty. per Vehicle LHD	Unit of Issue	Type of Vehicle	MODIFICATIONS New Part Number	MODIFICATIONS Change Point	MODIFICATIONS Amdt. No.	REMARKS
	OIL PUMP—PIPE—FILTER—RELEASE VALVE										
1	**Pump assembly—oil (R)**	**11G37**		1	1			**1H1191**	**Com. (E) GB46045 to 46100, then 46342 on**		
2	Body and plug	7H1790	AD1	1	1						
3	Cover	7H1791	AD2	1	1			17H1712	Com. (E) GB46045 to 46100, then 46342 on		
4	Dowel	7H1793	AD3	2	2						
5	Screw—cover to body	HNS0407	AD4	2	2				Fin. (E) GB46044 except 46101 to 46341		
6	Screw—cover to body (short)			1	1			HNS0408	Com. (E) GB46045 to 46100, then 46342 on		
7	Screw—cover to body (long)			1	1			HNS0414			
8	Washer for screw (spring)	LWN204	AD5	2	2						
9	Shaft—driving (with rotors)	7H1792	AD6	1	1						
10	Joint washer—oil pump to crankcase	11G10	AD7	1	1	12					
11	Washer for stud—oil pump to crankcase (plain)	PWN105	AD8	3	3	12					
12	Washer for stud—oil pump to crankcase (spring)	2K5319	AD9	3	3						
13	Nut for stud—oil pump to crankcase	FNN105	AD10	3	3						
14	**Strainer—oil**	**1G2390**		1	1						
15	Body—oil strainer	1G2391	AD11	1	1						Alternatives
16	Body—oil strainer	11G143		1	1						
17	Pipe—oil strainer suction	1G2385	AD12	1	1						
18	Cover—oil strainer (bottom)	1G1989	AD13	1	1						
19	Distance piece for oil strainer	1K1382	AD14	1	1						
20	Bolt—oil strainer body to bottom cover	51K1366	AD15	1	1				Fin. (E) GB46044 except 46101 to 46341		
21	Washer for bolt (shakeproof)	LWN605	AD16	1	1						
22	Nut for bolt	FNN105	AD17	1	1						
23	Joint washer—oil strainer to pump	1G2342	AD18	1	1	12					
24	Screw—strainer to pump	HBN0412	AD19	2	2						
25	Washer for screw (plain)	PWN104	AD20	2	2						
26	Washer for screw (spring)	LWN204	AD21	2	2						
27	**Strainer—oil**		**AD22**	1	1			**1H1192**			
28	Cover—oil strainer (top)			1	1			N.S.P.			
29	Body—oil strainer			1	1			N.S.P.			
30	Plate for body			1	1			N.S.P.	Com. (E) GB46045 to 46100, then 46342 on		
31	Pipe—oil strainer suction			1	1			N.S.P.			
32	Plate for oil suction pipe			1	1			N.S.P.			
33	Bolt—oil strainer to oil pump			3	3			HNS0406			
34	Washer for bolt (spring)			3	3			LWN304			
35	Joint washer—oil strainer to pump		AD23	1	1			1H1198			
36	**Spindle—oil pump driving**	**11G12**	**AD24**	1	1						
37	Union—oil pressure gauge pipe	11G15	AD25	1	1						
38	Washer for union	6K638	AD26	1	1	12					

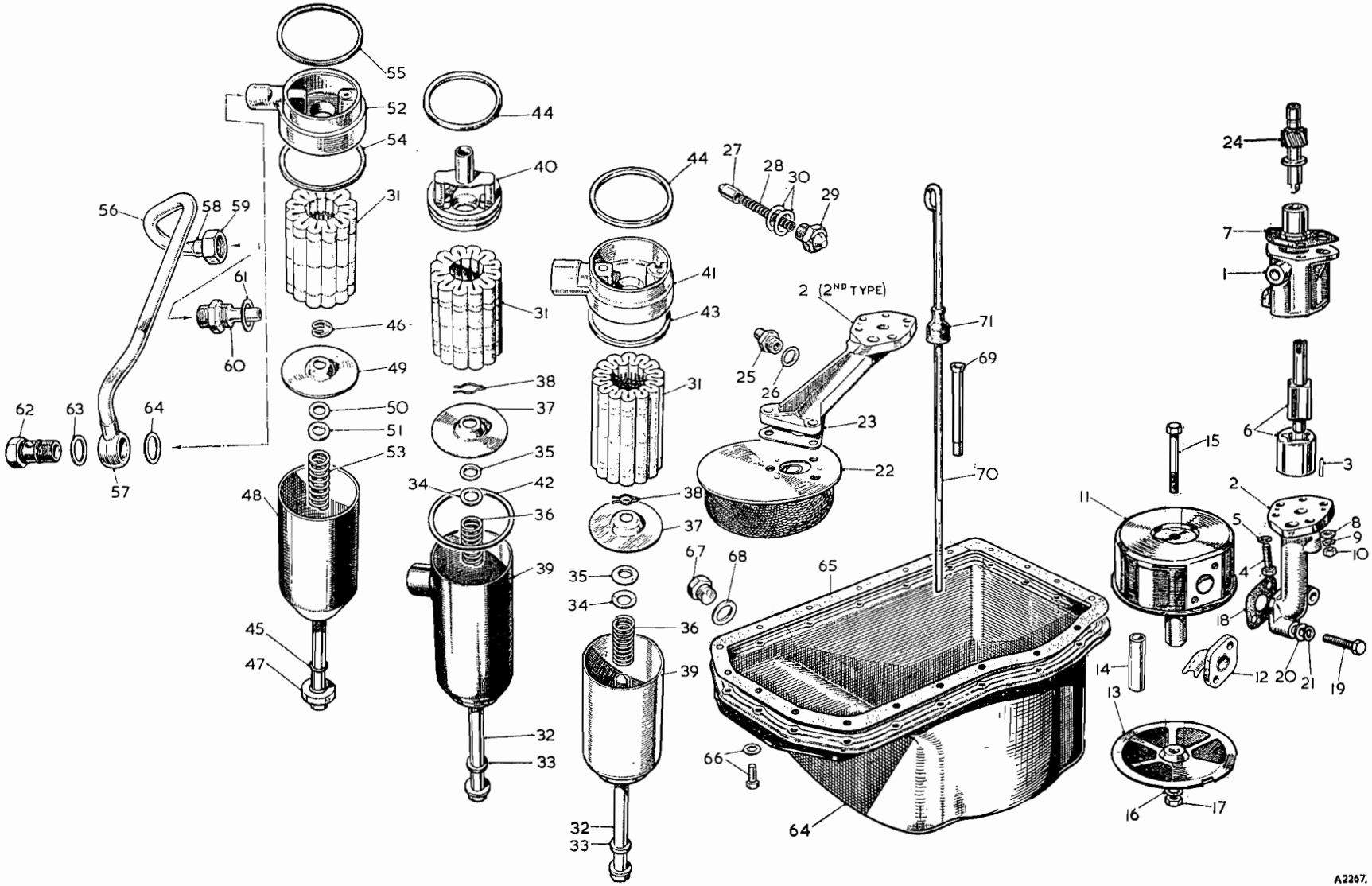
55
52
54
31
56
58
59
61
60
46
49
50
51
53
48
45
47
62
63
64
57
44
40
31
38
37
35
42
34
36
39
32
33
44
27
28
30
29
41
43
31
2 (2ND TYPE)
25
26
23
22
71
69
70
67
68
65
35
34
36
39
32
33
66
64
24
7
1
6
3
15
2
11
5
8
9
10
4
18
14
13
12
20
21
19
16
17
A2267.

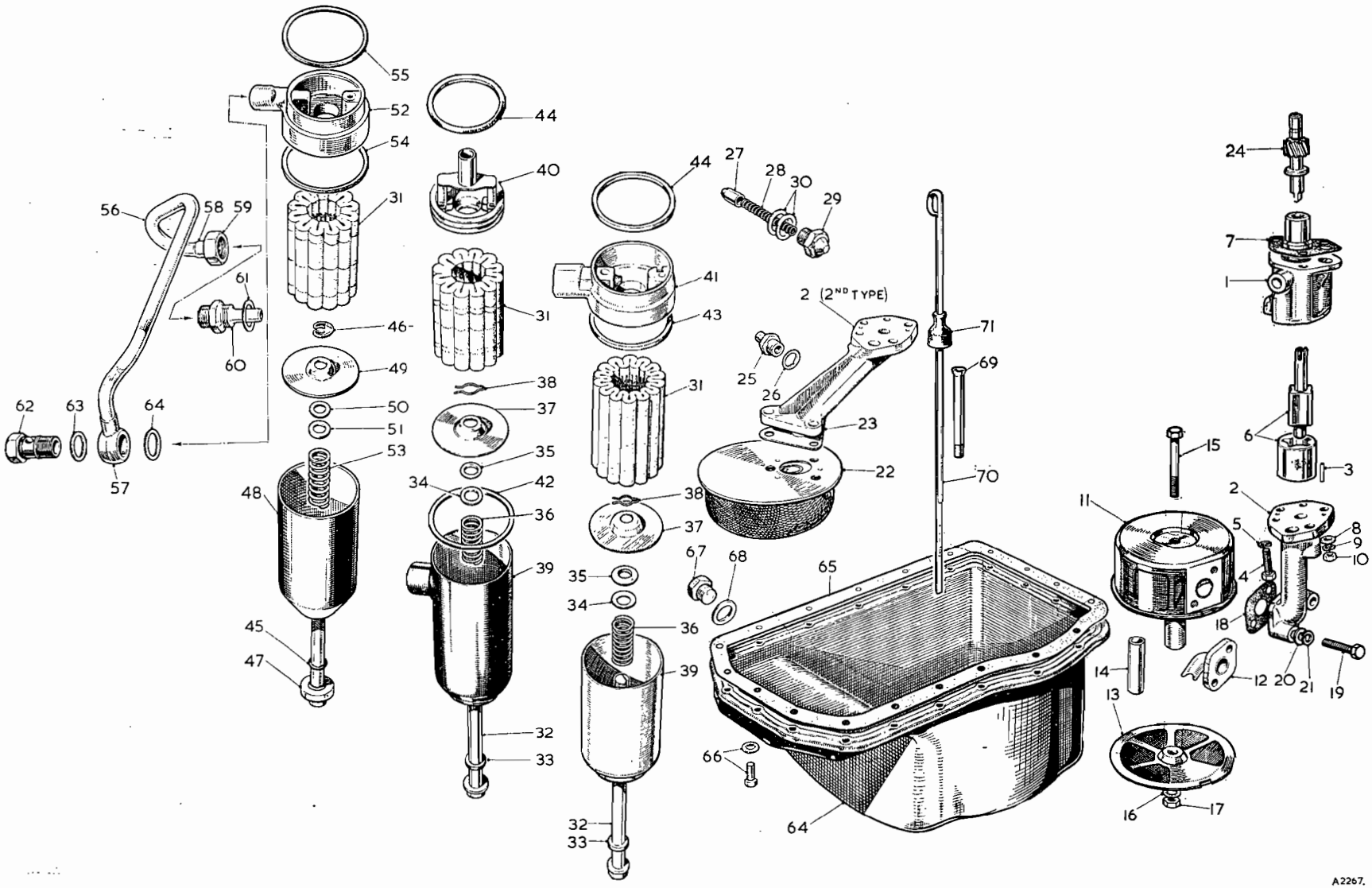

To face page A.9

Item No.	DESCRIPTION	Commencing (E) GB101 Part Number	Illus. No.	Qty. per Vehicle RHD	Qty. per Vehicle LHD	Unit of Issue	Type of Vehicle	MODIFICATIONS New Part Number	MODIFICATIONS Change Point	MODIFICATIONS Amdt. No.	REMARKS
	Oil Pump—Pipe—Filter—Release Valve—*continued*										
1	Valve—oil release	1G1452	AD27	1	1						
2	Spring for release valve	1H756	AD28	1	1						
3	Nut for spring (cap)	1A2206	AD29	1	1						
4	Washer for cap nut (fibre)	2K4982	AD30	2	2						
5	**Filter—oil—full-flow (Tecalemit)**	**1H778**		1	1			**1H1067**	**Com. (E) GB26661 except 26701 to 26933**		**Alternative to 1H1051**
6	**Element for filter**	**8G683**	**AD31**	1	1						
7	Bolt—centre	7H1965	AD32	1	1						
8	Washer—sealing	7H1948	AD33	1	1						
9	Washer (steel)	7H1969	AD34	1	1						
10	Washer (felt)	7H1968	AD35	1	1						
11	Spring	7H1764	AD36	1	1						
12	Plate—pressure	17H846	AD37	1	1						
13	Circlip	7H1952	AD38	1	1						
14	Container	7H1964	AD39	1	1			1H1069	Com. (E) GB26661 except 26701 to 26933		
15	Valve assembly	7H1963	AD40	1	1				Fin. (E) GB26660 except 26701 to 26933		
16	Head assembly		AD41	1	1			1H1068	Com. (E) GB26661 except 26701 to 26933		
17	Packing—hydraulic	17H847	AD42	1	1						
18	Joint ring—container to head		AD43	1	1	12		8G619	Com. (E) GB26661 except 26701 to 26933		
19	Joint ring—filter to crankcase	8G619	AD44	1	1	12					
20	**Filter—oil—full-flow (Purolator)**			1	1			**1H1051**	**Com. (E) GB26661 except 26701 to 26933**		**Alternative to 1H1067**
21	**Element for filter**		**AD31**	1	1			**8G683**			
22	Ring—sealing		AD45	1	1			17H1556			
23	Circlip		AD46	1	1			17H1557			
24	Bolt—centre		AD47	1	1			17H1558			
25	Collar for centre-bolt			1	1			17H1559			
26	Body assembly		AD48	1	1			1H1053	Com. (E) GB26661		
27	Plate—pressure		AD49	1	1			17H1446	except 26701 to 26933		
28	Seal		AD50	1	1			17H1447			
29	Washer		AD51	1	1			17H1448			
30	Head assembly		AD52	1	1			1H1052			
31	Spring		AD53	1	1			17H1449			
32	Joint ring—body to filter head		AD54	1	1	12		8G619			
33	Joint ring—filter head to crankcase		AD55	1	1	12		8G619			

Item No.	DESCRIPTION	Commencing (E) GB101 Part Number	Illus. No.	Qty. per Vehicle RHD	Qty. per Vehicle LHD	Unit of Issue	Type of Vehicle	MODIFICATIONS New Part Number	MODIFICATIONS Change Point	MODIFICATIONS Amdt. No.	REMARKS
	Oil Pump—Pipe—Filter—Release Valve—*continued*										
1	**Pipe assembly—oil—filter to crankcase**	**1H1005**	**AD56**	1	1			**1H1056**	**Com. (E) GB26661 except 26701 to 26933**		**When supplying 1H1005 prior to (E) GB11298 supply also 1 off 1H922 adaptor**
2	Banjo union	1K2141	AD57	1	1						
3	Nipple	2K5163	AD58	1	1						
4	Nut	2K5164	AD59	1	1						
5	Adaptor for oil pipe	1H762	AD60	1	1			1H922	Com. (E) GB11298		
6	Joint washer for adaptor	6K501	AD61	1	1			1H898			
7	Screw for banjo union	1K2142	AD62	1	1						
8	Washer for screw	6K501	AD63	2	2			1H898	Com. (E) GB11298		
9	Washer for screw (inner)			1	1			6K501	Com. (E) GB45501		
10	Washer for screw (outer)			1	1			1H898			
	OIL RESERVOIR—DIPPER ROD										
11	**Reservoir—oil**	**1G2508**	**AD64**	1	1						
12	Joint washer—reservoir to crankcase	1G2290	AD65	1	1	12					
13	Screw with captive washer—reservoir to crankcase	6K639	AD66	19	19	12					
14	Plug—drain—oil reservoir	2F4249	AD67	1	1						
15	Washer for plug	6K638	AD68	1	1	12					
16	Tube—oil dipper rod	1B1063	AD69	1	1						
17	**Rod—oil dipper**	**11G64**	**AD70**	1	1						
18	Dust cap for oil dipper rod	1B1735	AD71	1	1						

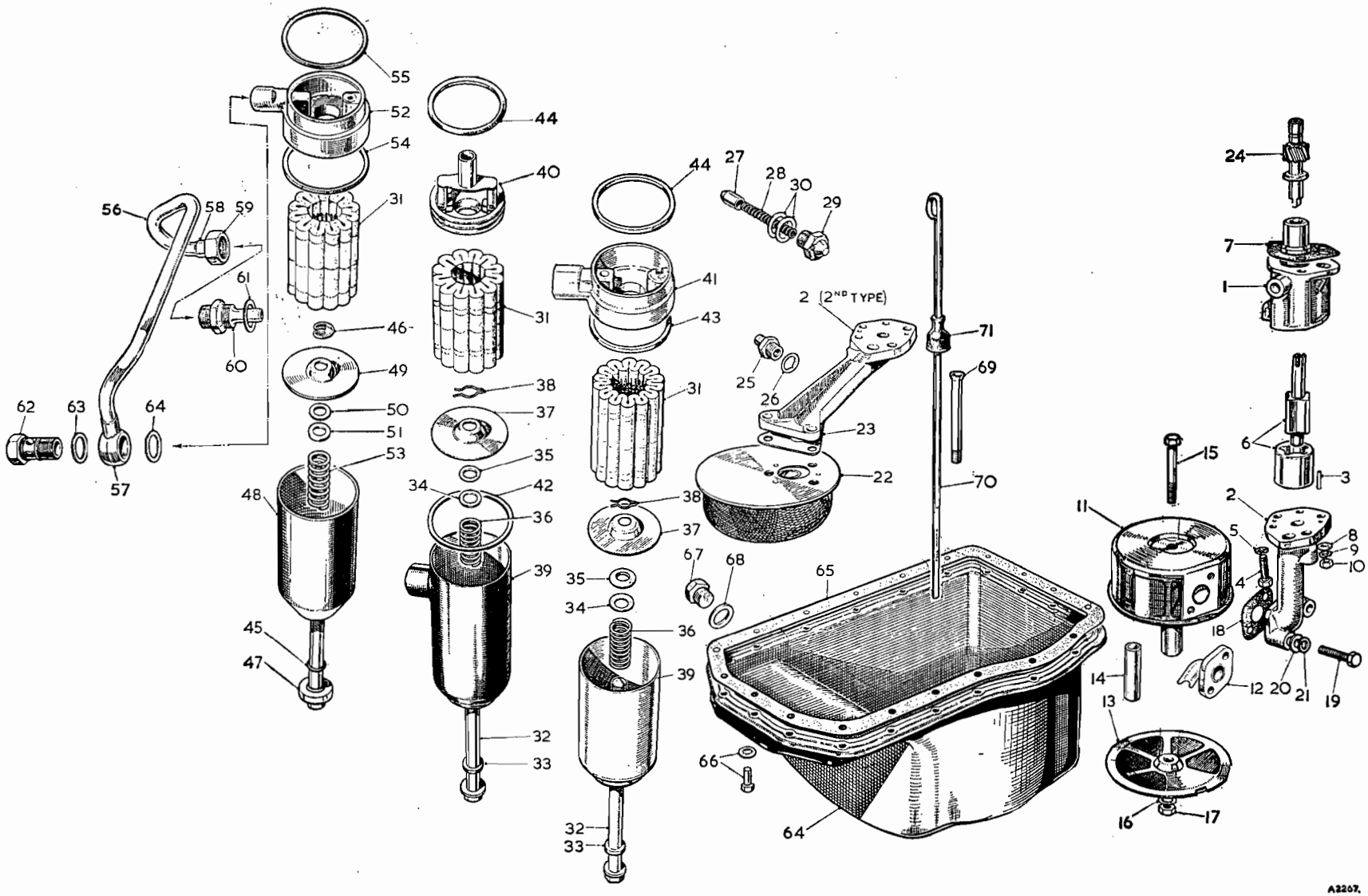

To face page A.10

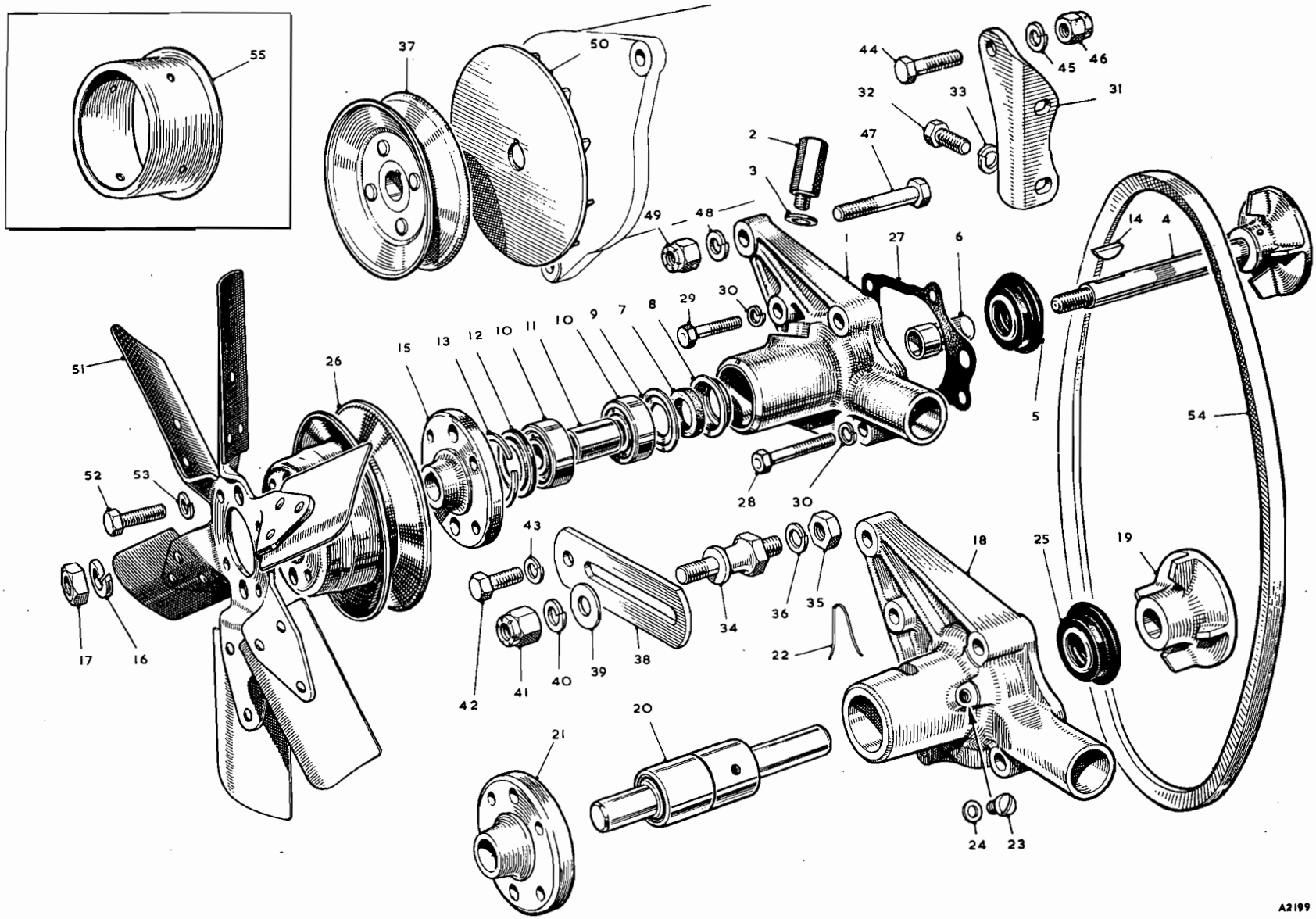

To face page A.11

Item No.	DESCRIPTION	Commencing (E) GB101 Part Number	Illus. No.	Qty. per Vehicle RHD	LHD	Unit of Issue	Type of Vehicle	MODIFICATIONS New Part Number	Change Point	Amdt. No.	REMARKS
	WATER PUMP—FAN PULLEY—BELT										
1	**Pump assembly—water (less pulley and hub)**	**11G164**		1	1						
2	Body—water pump	1G2301	AE1	1	1						
3	Plug—water pump oil filler	11G209	AE2	1	1						
4	Washer for plug	2K4958	AE3	1	1	36					
5	Spindle with vane—water pump	11G165	AE4	1	1						
6	Seal	8G698	AE5	1	1	12					
7	Distance piece—gland	1G2303	AE6	1	1	12					
8	Washer—felt	2K8450	AE7	1	1						
9	Retainer—felt washer (inner)	1A2065	AE8	1	1						
10	Retainer—felt washer (outer)	1A2066	AE9	1	1	12					
11	Bearing—ball	2A457	AE10	2	2						
12	Distance piece for water pump bearing	1A2064	AE11	1	1						
13	Retainer—grease	1G2310	AE12	1	1	6			Fin. (E) GB39364		
14	Ring—spring	1A2068	AE13	1	1				except 39401 to 39525		
15	Key for pulley	6K49	AE14	1	1						
16	Hub for pulley	11G204	AE15	1	1						
17	Washer for hub (spring)	2K5896	AE16	1	1						
18	Nut for hub	FNZ207	AE17	1	1	12					
19	**Repair kit—water pump**	**8G2130**		1	1						
20	Washer for plug			1	1						
21	Seal			1	1						
22	Washer (felt)			1	1						
23	Retainer—felt washer (inner)			1	1						
24	Retainer—felt washer (outer)			1	1						
25	Ring—spring			1	1						
26	Joint washer—water pump to block			1	1						
27	**Pump assembly (reconditioned) (U.K. only) (R)**	**8G662**		1							
28	**Body with ·020″ O/S bearing housing (U.K. only)**	**11G259**		1							
29	**Bearing—ball (·020″ O/S) (U.K. only)**	**11G260**		1							
30	**Pump assembly—water (with hub)**			1	1			**1H1149**			
31	Body—water pump		AE18	1	1			1H1151			
32	Vane—water pump		AE19	1	1			1H1152			
33	Bearing assembly—water pump		AE20	1	1			1H1153	Com. (E) GB39365		
34	Hub for pulley		AE21	1	1			1H1154	except 39401 to 39525		
35	Wire for bearing (locating)		AE22	1	1			2A778			
36	Screw for lubricating point		AE23	1	1			53K1433			
37	Washer for screw		AE24	1	1	12		2K4974			
38	Seal		AE25	1	1	12		8G698			
39	Pulley for fan and water pump	11G200	AE26	1	1						
40	Joint washer—water pump to block	1G2302	AE27	1	1	12					
41	Screw—water pump body to crankcase (long)	HBZ0512	AE28	2	2						
42	Screw—water pump body to crankcase (short)	HZS0509	AE29	2	2						
43	Washer for screw (spring)	2K5319	AE30	4	4						

Item No.	DESCRIPTION	Commencing (E) GB101 Part Number	Illus. No.	Qty. per Vehicle RHD	Qty. per Vehicle LHD	Unit of Issue	Type of Vehicle	MODIFICATIONS New Part Number	MODIFICATIONS Change Point	MODIFICATIONS Amdt. No.	REMARKS
	DYNAMO MOUNTING										
1	Bracket—dynamo	2A758	AE31	1	1						
2	Screw—bracket to crankcase	HZS0506	AE32	2	2						
3	Washer for screw (spring)	2K5319	AE33	2	2						
4	Pillar—dynamo mounting	2A128	AE34	1	1						
5	Nut for dynamo mounting pillar	FNZ506	AE35	1	1						
6	Washer for nut (spring)	LWN206	AE36	1	1			LWN306	Com. (E) GD101		
7	Pulley for dynamo	2A412	AE37	1	1			1H998	Com. (E) GB17061		
8	Link for dynamo—adjusting	2A497	AE38	1	1						
9	Washer for adjusting link to pillar	2K9932	AE39	1	1						
10	Washer for adjusting link to pillar (spring)	LWN206	AE40	1	1						
11	Nut for adjusting link to pillar	LNZ206	AE41	1	1						
12	Screw for link to dynamo	3H2098	AE42	1	1						
13	Washer for screw	2K5319	AE43	1	1						
14	Bolt for dynamo bracket	HBZ0509	AE44	1	1						
15	Washer for bolt (spring)	2K5319	AE45	1	1						
16	Nut for bolt	LNZ205	AE46	1	1						
17	Bolt for dynamo to water pump	HBZ0513	AE47	1	1						
18	Washer for bolt (spring)	2K5319	AE48	1	1						
19	Nut for bolt	LNZ205	AE49	1	1						
20	**Fan for dynamo**	**1G1783**	**AE50**	1	1						
	FAN BLADES—BELT										
21	**Fan blade assembly**	**AEG129**	**AE51**	1	1						
22	Screw—fan to pulley	HZS0406	AE52	4	4						
23	Washer for screw (spring)	LWZ204	AE53	4	4						
24	**Belt for fan (wedge-type)**	**1G2716**	**AE54**	1	1			**1H1001**	**Com. (E) GB17061**		
25	Blanking sleeve—thermostat by-pass	11G176	AE55	1	1						

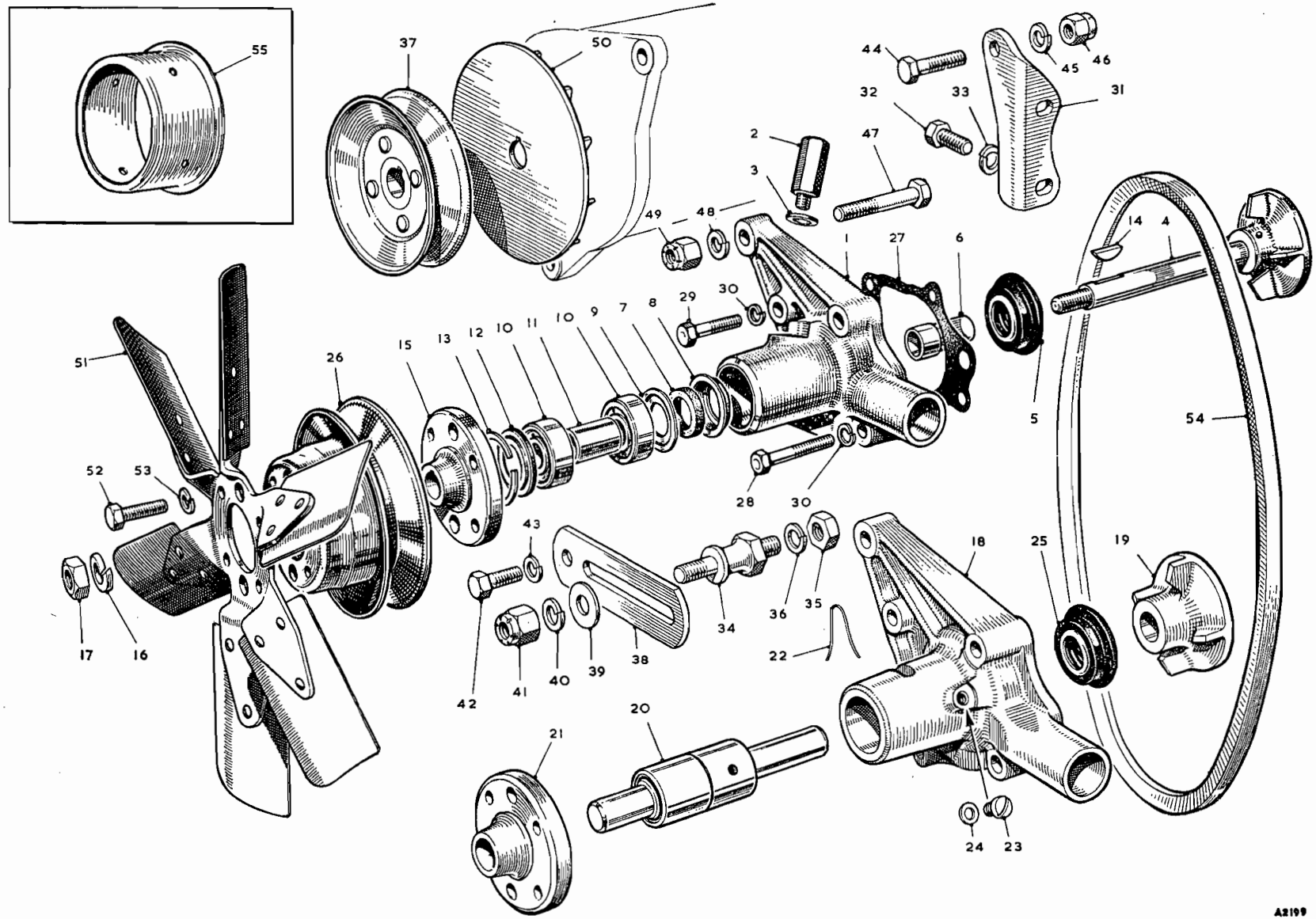

To face page A.12

Item No.	DESCRIPTION	Commencing (E) GB101 Part Number	Illus. No.	Qty. per Vehicle RHD	Qty. per Vehicle LHD	Unit of Issue	Type of Vehicle	MODIFICATIONS New Part Number	MODIFICATIONS Change Point	MODIFICATIONS Amdt. No.	REMARKS
	OVERSIZE AND UNDERSIZE COMPONENTS										
1	**Bearing—main—·010″ U/S**	**8G208110**		**1 set**	**1 set**	1		**8G217510**			
2	Bearing—main—·020″ U/S	8G208120		1 set	1 set	1		8G217520	Com. (E) GB3511		
3	Bearing—main—·030″ U/S	8G208130		1 set	1 set	1		8G217530			
4	Bearing—main—·040″ U/S	8G208140		1 set	1 set	1		8G217540			
5	**Bearing—connecting rod—·010″ U/S**	**8G213710**		**1 set**	**1 set**	1		**8G228510**			
6	Bearing—connecting rod—·020″ U/S	8G213720		1 set	1 set	1		8G228520	Com. (E) GD6530		
7	Bearing—connecting rod—·030″ U/S	8G213730		1 set	1 set	1		8G228530			
8	Bearing—connecting rod—·040″ U/S	8G213740		1 set	1 set	1		8G228540			
9	**Piston assembly—·010″ O/S**	**1H084910**		**4**	**4**			**1H108710**	**Com. (E) GB27909**		
								1H111810	**Com. (E) GB38484**		
								1H114210	**Com. (E) GB40825**		
10	Piston assembly—·020″ O/S	1H084920		4	4			1H108720	Com. (E) GB27909		
								1H111820	Com. (E) GB38484		
								1H114220	Com. (E) GB40825		
11	Piston assembly—·030″ O/S	1H084930		4	4			1H108730	Com. (E) GB27909		
								1H111830	Com. (E) GB38484		
								1H114230	Com. (E) GB40825		
12	Piston assembly—·040″ O/S	1H074940		4	4			1H084940	Com. (Ef GB5682		
								1H108740	Com. (E) GB27909		
								1H111840	Com. (E) GB38484		
								1H114240	Com. (E) GB40825		
13	Ring—compression—top—·010″ O/S	1H075110		4	4			1H085110	Com. (E) GB5682		
								1H108810	Com. (E) GB27909		
								1H114410	Com. (E) GB40825		
14	Ring—compression—top—·020″ O/S	1H075120		4	4			1H085120	Com. (E) GB5682		
								1H108820	Com. (E) GB27909		
								1H114420	Com. (E) GB40825		
15	Ring—compression—top—·030″ O/S	1H075130		4	4			1H085130	Com. (E) GB5682		
								1H108830	Com. (E) GB27909		
								1H114430	Com. (E) GB40825		
16	Ring—compression—top—·040″ O/S	1H075140		4	4			1H085140	Com. (E) GB5682		
								1H108840	Com. (E) GB27909		
								1H114440			
17	Ring—compression—taper—·010″ O/S	1H075210		8	8	8		1H114510			
18	Ring—compression—taper—·020″ O/S	1H075220		8	8	8		1H114520			
19	Ring—compression—taper—·030″ O/S	1H075230		8	8	8		1H114530			
20	Ring—compression—taper—·040″ O/S	1H075240		8	8	8		1H114540	Com. (E) GB40825		
21	Ring—scraper—·010″ O/S	1H071110		4	4			1H114610			
22	Ring—scraper—·020″ O/S	1H071120		4	4			1H114620			
23	Ring—scraper—·030″ O/S	1H071130		4	4			1H114630			
24	Ring—scraper—·040″ O/S	1H071140		4	4			1H114640			
25	Pin—gudgeon—·002″ O/S	1H057702		4	4			1H111302			
26	Pin—gudgeon—·004″ O/S	1H057704		4	4			1H111304	Com. (E) GB38484		
27	Pin—gudgeon—·006″ O/S	1H057706		4	4			1H111306			
28	Guide—inlet valve—·010″ O/S	11G031310		4	4						
29	Guide—exhaust valve—·010″ O/S	11G019310		4	4						

Item No.	DESCRIPTION	Commencing (E) GB101 Part Number	Illus. No.	Qty. per Vehicle RHD	Qty. per Vehicle LHD	Unit of Issue	Type of Vehicle	MODIFICATIONS New Part Number	MODIFICATIONS Change Point	MODIFICATIONS Amdt. No.	REMARKS
	ENGINE SERVICE KITS										
1	**Joint washer kit for engine decarbonizing**	**48G139**		**1 kit**	**1 kit**	1					
2	Joint washer for cylinder head										
3	Joint washer for inlet and exhaust manifold										
4	Joint washer for thermostat										
5	Joint washer for water outlet elbow										
6	Joint washer for valve rocker cover										
7	Joint washer for heater outlet elbow cover										
8	Packing ring for valves										
9	Joint washer for air cleaner to carburetter										
10	Joint washer for carburetters										
11	**Supplementary joint washer kit**	**48G122**		**1 kit**	**1 kit**	1					
12	Joint strip for main bearing caps										
13	Joint washer for cylinder side cover										
14	Joint washer for mechanical petrol pump										
15	Joint washer for oil strainer to oil pump										
16	Joint washer for oil pump										
17	Joint washer for oil reservoir										
18	Joint washer for water pump										
19	Washer for oil reservoir plug										
20	Joint washer for engine rear plate										
21	Joint washer for engine front cover										
22	Joint washer for engine front plate										
23	Joint washer for crankcase blanking plate										Use supplementary set with 48G139 for complete engine overhaul. For use on engines prior to the introduction of chain tensioner (E) GB259
24	**Supplementary joint washer kit**	**48G138**		**1 kit**	**1 kit**	1					
25	Joint strip for main bearing caps										
26	Joint washer for cylinder side cover										
27	Joint washer for mechanical petrol pump										
28	Joint washer for oil strainer to oil pump										
29	Joint washer for oil pump										
30	Joint washer for oil reservoir										
31	Joint washer for water pump										
32	Washer for oil reservoir plug										
33	Joint washer for engine rear plate										
34	Joint washer for engine front cover										
35	Joint washer for engine front plate										
36	Joint washer for chain tensioner										
37	Joint washer for oil filter crankcase										
38	Joint washer for oil pipe adaptor										
39	Joint washer for crankcase blanking plate										For engines fitted with chain tensioner from (E) GB259
40	**Chain tensioner servicing kit**	**17H341**		**1 kit**	**1 kit**	1					
41	Spring										
42	Bottom plug										
43	Tab washer										
44	Cylinder										

Item No.	DESCRIPTION	Commencing (E) GB101		Qty. per Vehicle		Unit of Issue	Type of Vehicle	MODIFICATIONS			REMARKS
		Part Number	Illus. No.	RHD	LHD			New Part Number	Change Point	Amdt. No.	
	TOURING KIT										
1	**Touring kit**	**8G1057**		**1 kit**	**1 kit**	1		**8G1058** **8G1073**	**Com. (E) GB17061** **Com. (E) GD7551**		
2	Contact set			1	1						
3	Rotor			1	1						
4	Condenser			1	1						
5	Sparking plugs			1	1						
6	Fuse (35-amp.)			3	3						
7	Inlet valve			1	1						
8	Exhaust valve			1	1						
9	Valve spring (outer)			2	2						
10	Valve spring (inner)			2	2						
11	Valve cotter			2 prs.	2 prs.						
12	Valve cup			2	2						
13	Valve circlip			2	2						
14	Fan belt			1	1						
15	Distributor cap			1	1						
16	Top hose for radiator			1	1						
17	Bottom hose for radiator			1	1						
18	Headlamp bulb			1	1						
19	Sidelamp bulb			1	1						
20	Number-plate bulb			1	1						
21	Tail lamp bulb			1	1						

Item No.	DESCRIPTION	Commencing (E) GB101		Qty. per Vehicle		Unit of Issue	Type of Vehicle	MODIFICATIONS			REMARKS
		Part Number	Illus. No.	RHD	LHD			New Part Number	Change Point	Amdt. No.	
	EXHAUST AND INLET MANIFOLD										
1	**Manifold—exhaust**	**48G143**	**AF1**	1	1						
2	Stud for exhaust pipe flange	AEH194	AF2	3	3						
3	Washer for stud	LWZ205	AF3	3	3	24					
4	Nut for stud	AEH195	AF4	3	3						
5	**Manifold—induction**	**AEH174**	**AF5**	1	1						
6	Stud—carburetter to induction manifold	52K2236	AF6	4	4						
7	Washer for stud	PWZ106	AF7	4	4						
8	Nut for stud	FNZ106	AF8	4	4						
9	Joint washer manifolds to cylinder head	1G2417	AF9	1	1	12					
10	Stud—inlet and exhaust manifolds to cylinder head	53K490	AF10	4	4						
11	Washer for stud (spring)	LWZ205	AF11	6	6	24					
12	Nut for stud (stainless steel)	AHH5171	AF12	6	6						
13	Yoke—manifold	1G2418	AF13	4	4	12					
14	Stud—inlet manifold (accelerator abutment bracket)	AHH5299	AF14	2	2						
15	Washer for stud (spring)	LWZ206	AF15	2	2						
16	Nut for stud	FNZ206	AF16	2	2						
17	Washer—packing—for vacuum pipe	PWZ106	AF17	1	1						
18	Washer—carburetter insulating	AEG111	AF18	2	2			AHH5713	] Com. (C) 42613		] Required together from (C) 42613
19	Gasket—heat shield		AF19	4	4			AEH551	]		
20	Adaptor plug		AF20	1	1			AEH281	Com. (E) GB23567		

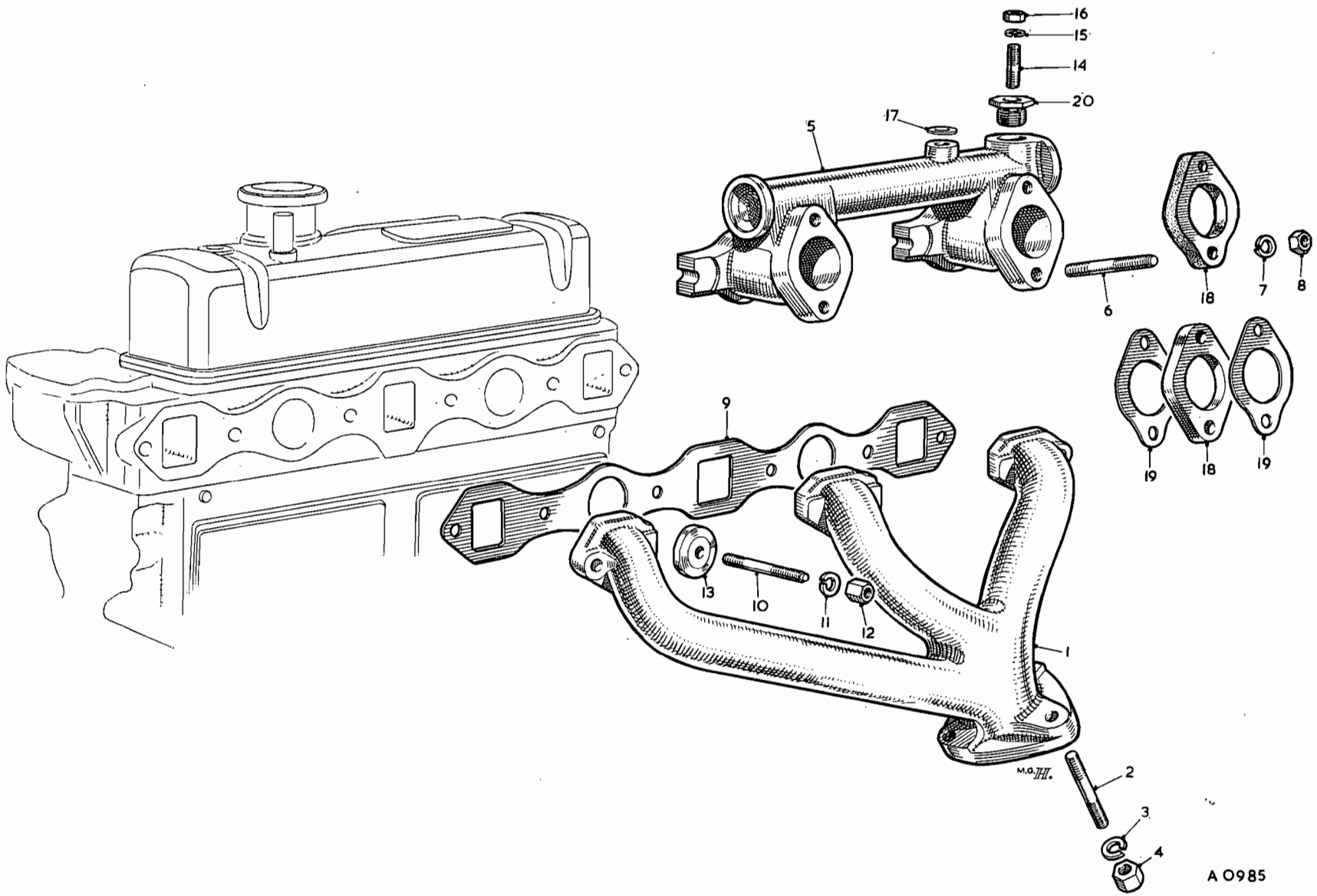

To face page A.16

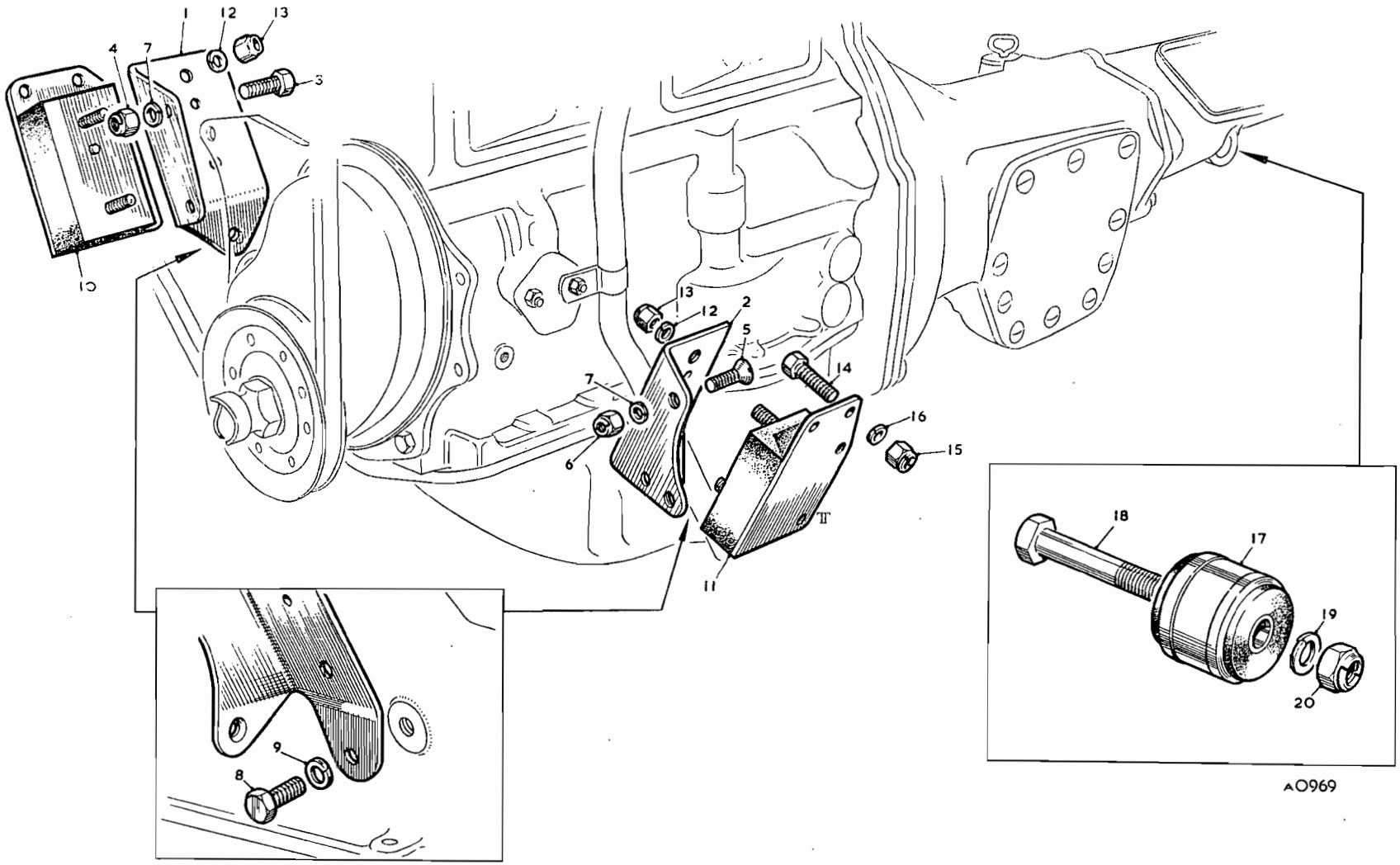

To face page A.17

Item No.	DESCRIPTION	Commencing (E) GB101 Part Number	Illus. No.	Qty. per Vehicle RHD	Qty. per Vehicle LHD	Unit of Issue	Type of Vehicle	MODIFICATIONS New Part Number	MODIFICATIONS Change Point	MODIFICATIONS Amdt. No.	REMARKS
	ENGINE MOUNTING										
1	**Bracket—engine mounting (R/H front)**	**AHH5065**	**AG1**	1	1						
2	**Bracket—engine mounting (L/H front)**	**AHH5066**	**AG2**	1	1						
3	Screw—bracket to mounting plate—R/H	HZS0507	AG3	2	2						
4	Nut—bracket to mounting plate—R/H	LNZ105	AG4	2	2						
5	Screw—bracket to plate (countersunk)	CMZ0516	AG5	2	2						
6	Nut for countersunk screw	LNZ105	AG6	2	2						
7	Washer for countersunk screw (spring)	LWZ205	AG7	4	4	24					
8	Screw—bracket to block	HZS0606	AG8	2	2						
9	Washer for screw (spring)	LWZ206	AG9	2	2						
10	**Rubber—engine mounting (R/H front)**	**AHH5027**	**AG10**	1	1						
11	**Rubber—engine mounting (L/H front)**	**AHH5028**	**AG11**	1	1						
12	Washer—engine mounting to bracket (spring)	LWZ205	AG12	4	4	24					
13	Nut—engine mounting to bracket	FNZ105	AG13	4	4						
14	Screw—mounting rubber to frame brackets	HZS0506	AG14	8	8						
15	Nut for screw	FNZ105	AG15	8	8						
16	Washer for screw (spring)	LWZ205	AG16	8	8	24					
17	**Flexible bush—rear engine mounting**	**AHH5031**	**AG17**	1	1						
18	Bolt for flexible bush	HBZ0826	AG18	1	1						
19	Washer for bolt	LWZ208	AG19	1	1						
20	Nut for rear mounting bush bolt	LNZ108	AG20	1	1						

Item No.	DESCRIPTION	Commencing (C) 10101 Part Number	Illus. No.	Qty. per Vehicle RHD	Qty. per Vehicle LHD	Unit of Issue	Type of Vehicle	MODIFICATIONS New Part Number	MODIFICATIONS Change Point	MODIFICATIONS Amdt. No.	REMARKS
	EXHAUST SYSTEM										
1	**Exhaust pipe assembly**	**ARH63**	**AH1**	**1**	**1**						
2	Pipe—front	ARH1053	AH2	1	1						
3	Silencer and tail pipe	ARH65	AH3	1	1						
4	Packing—exhaust pipe	AHH5146	AH4	1	1						
5	**Mounting—exhaust—intermediate**	**AHH5402**	**AH5**	**1**	**1**						
6	Bush for intermediate exhaust mounting	AHH5403	AH6	2	2						
7	Housing—intermediate exhaust mounting	AHH5404	AH7	1	1						
8	Bolt—bush and housing to pipe	HBZ0522	AH8	1	1						
9	Nut—bush and housing bolt	FNZ105	AH9	1	1						
10	Washer for bolt (spring)	LWZ205	AH10	1	1	24					
11	**Mounting—exhaust—rear**	**AHH5405**	**AH11**	**1**	**1**						
12	Screw—mountings to frame	HZS0404	AH12	4	4						
13	Nut for screw	FNZ104	AH13	4	4						
14	Washer for screw (spring)	LWZ204	AH14	4	4						
15	Bolt—rear mounting and tail pipe	HBZ0422	AH15	1	1						
16	Nut for rear mounting bolt	FNZ104	AH16	1	1						
17	Washer for bolt (spring)	LWZ204	AH17	1	1						
18	Washer for bolt (plain)	PWZ104	AH18	2	2	12					
19	Screw—housing to intermediate mounting	HZS0404	AH19	2	2						
20	Nut for housing screw	FNZ104	AH20	2	2						
21	Washer for screw (spring)	LWZ204	AH21	2	2						
22	Strap—upper front mounting	AHH5406	AH22	1	1						
23	Strap—lower front mounting	AHH5407	AH23	1	1						
24	Screw—strap to front pipe	HZS0505	AH24	1	1						
25	Nut for strap screw	FNZ105	AH25	1	1						
26	Washer for strap screw (spring)	LWZ205	AH26	1	1	24					
27	Washer for strap screw (plain)	PWZ105	AH27	1	1						

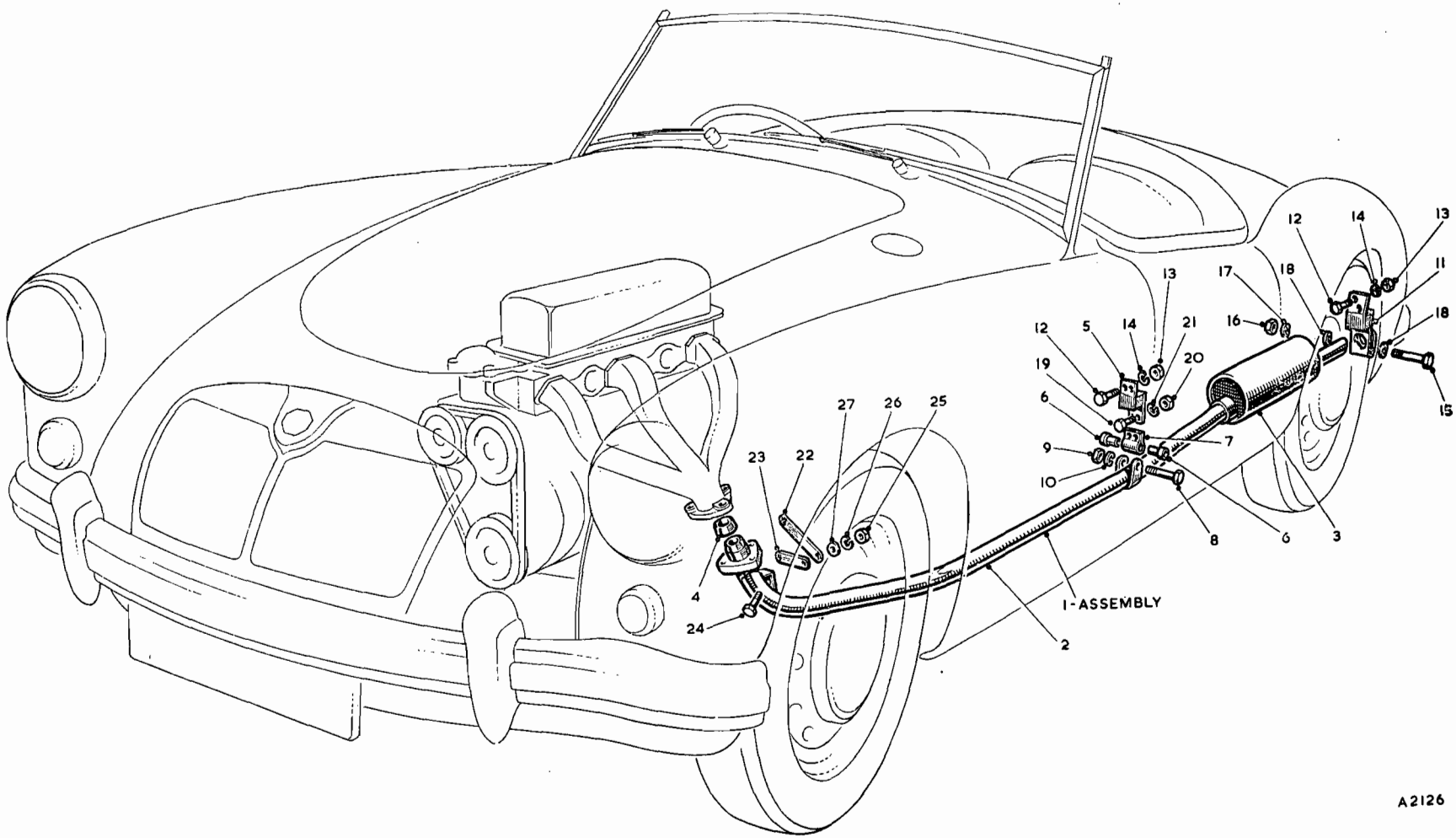

To face page A.18

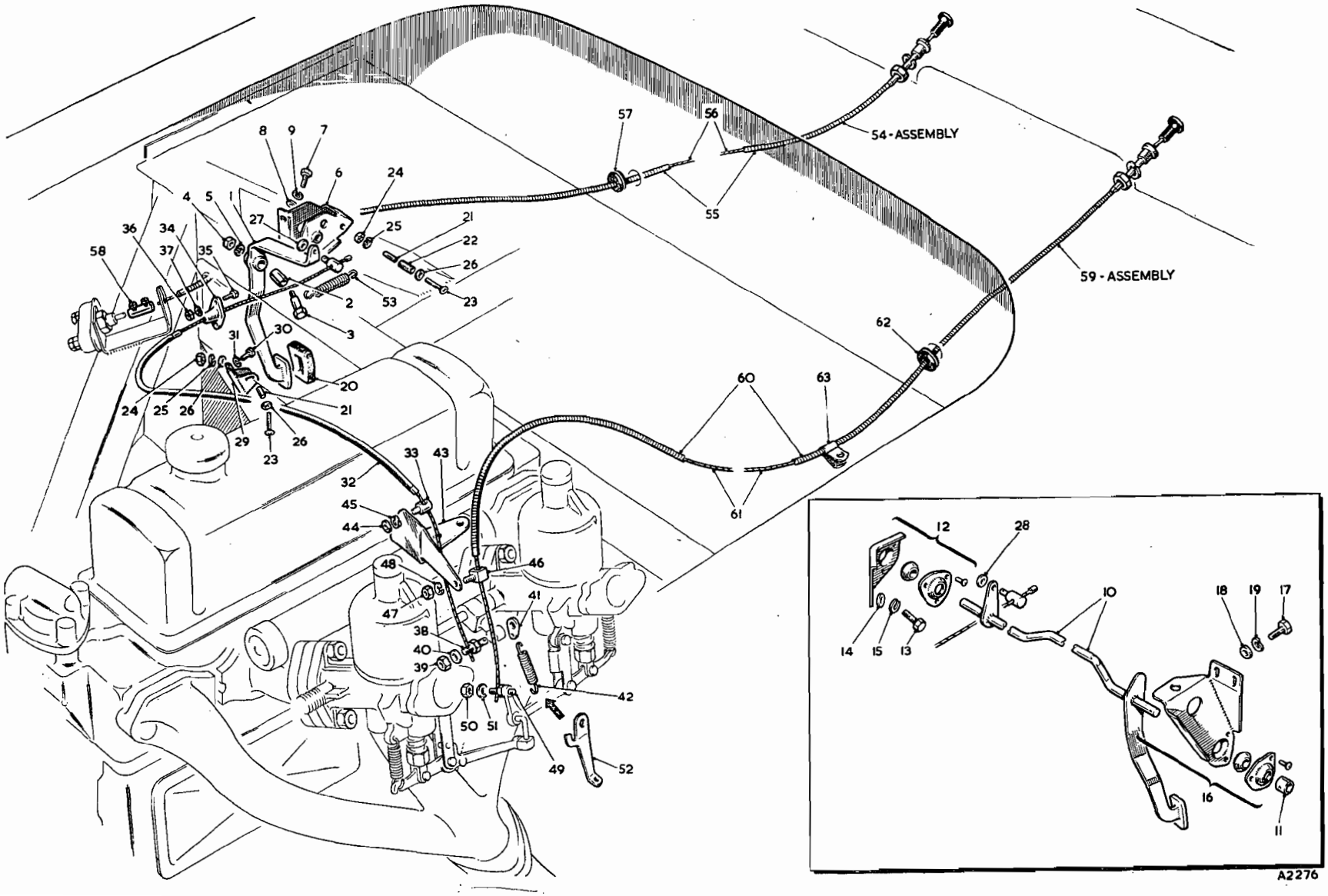
54 - ASSEMBLY
59 - ASSEMBLY
A2276

Item No.	DESCRIPTION	Commencing (C) 10101 Part Number	Illus. No.	Qty. per Vehicle RHD	Qty. per Vehicle LHD	Unit of Issue	Type of Vehicle	MODIFICATIONS New Part Number	MODIFICATIONS Change Point	MODIFICATIONS Amdt. No.	REMARKS
	ENGINE CONTROLS										
	ACCELERATOR CONTROL										
	Pedal assembly—accelerator	**AHH5300**	**AJ1**	1							
1	Bush	AHH5301	AJ2	1							
2	Fulcrum pin—accelerator pedal	AHH5306	AJ3	1							
3	Nut for fulcrum pin	FNZ105	AJ4	1							
4	Washer for fulcrum pin (spring)	LWZ205	AJ5	1		24					
5	Bracket—accelerator pedal mounting	AHH5302	AJ6	1							
6	Screw—bracket to goal-post inner upright	HPZ0405	AJ7	4							
7	Washer for pedal bracket (plain)	PWZ104	AJ8	4							
8	Washer for pedal bracket (spring)	LWZ204	AJ9	4		12					
9	**Pedal and cross-shaft assembly—accelerator**	**AHH5311**	**AJ10**		1						
10	Locating collar—accelerator shaft	AHH5314	AJ11		1						
11	Bracket assembly—R/H—accelerator pedal shaft	AHH5320	AJ12		1						
12	Screw—bracket to goal-post—R/H	HPZ0405	AJ13		2						
13	Washer (plain) for screw	PWZ104	AJ14		2	12					
14	Washer (spring) for screw	LWZ204	AJ15		2						
15	Bracket assembly—L/H—accelerator pedal shaft	AHH5321	AJ16		1						
16	Screw—bracket to goal-post—L/H	HZS0405	AJ17		3						
17	Washer for screw (plain)	PWZ104	AJ18		3	12					
18	Washer for screw (spring)	LWZ204	AJ19		3						
19	Pad—pedal (rubber)	ACA5321	AJ20	1	1	12					
20	Tube—distance	AHH5303	AJ21	2	2						
21	Stop—accelerator pedal	AHH5304	AJ22	1	1						
22	Screw—distance tube/adjustable stop	PMZ0422	AJ23	2	2						
23	Nut for screw	FNZ104	AJ24	2	2						
24	Washer for nut (spring)	LWZ204	AJ25	2	2						
25	Washer for nut (plain)	PWZ104	AJ26	3	3	12					
26	Washer for cable to pedal (plain)	AJD7042	AJ27	2							
27	Washer for cable to shaft assembly (plain)	AJD7042	AJ28		1						
28	Adjustable stop—accelerator pedal	AHH5380	AJ29	1	1						
29	Screw for adjustable stop	HPZ0405	AJ30	2	2						
30	Washer for screw (spring)	LWZ204	AJ31	2	2						
31	**Cable—accelerator**	**AHH5625**	**AJ32**	1	1						
32	Pin—cable anchor	AHH5626	AJ33	1	1						
33	Guide—cable	AHH5308	AJ34	1	1						
34	Screw for guide to toeboard plate	PMZ0308	AJ35	2	2						
35	Nut for guide screw	FNZ103	AJ36	2	2						
36	Washer for guide screw (spring)	LWZ203	AJ37	2	2						
37	Clamp—accelerator cable	AHH5309	AJ38	1	1						
38	Nut for cable to clamp	FNZ104	AJ39	1	1						
39	Washer for cable to clamp (plain)	PWZ104	AJ40	1	1	12					
40	Bracket—accelerator return spring	84180	AJ41	1	1						

Item No.	DESCRIPTION	Commencing (C) 10101		Qty. per Vehicle		Unit of Issue	Type of Vehicle	MODIFICATIONS			REMARKS
		Part Number	Illus. No.	RHD	LHD			New Part Number	Change Point	Amdt. No.	
	Accelerator Controls—*continued*										
1	Spring—accelerator return	AJJ3020	AJ42	1	1			AHH5621	Com. (C) 24594		
2	Bracket—abutment	AHH5310	AJ43	1	1						
3	Washer—cable to bracket (plain)	AJD7042	AJ44	1	1						
4	Washer—cable to bracket (spring)	AJD7712	AJ45	1	1						
5	Abutment—choke control	ACH5112	AJ46	1	1						
6	Nut for choke abutment	FNZ103	AJ47	1	1						
7	Washer for choke abutment (spring)	LWZ203	AJ48	1	1						
8	Clamp—choke control cable	AHH5309	AJ49	1	1						
9	Nut for cable to clamp	FNZ104	AJ50	1	1						
10	Washer for cable to clamp (plain)	PWZ104	AJ51	1	1	12					
11	Bracket—accelerator spring anchor	AHH5339	AJ52	1	1			AHH5623	] Com. (C) 24594		
12	Spring—pull-off		AJ53	1	1			AHH5624			

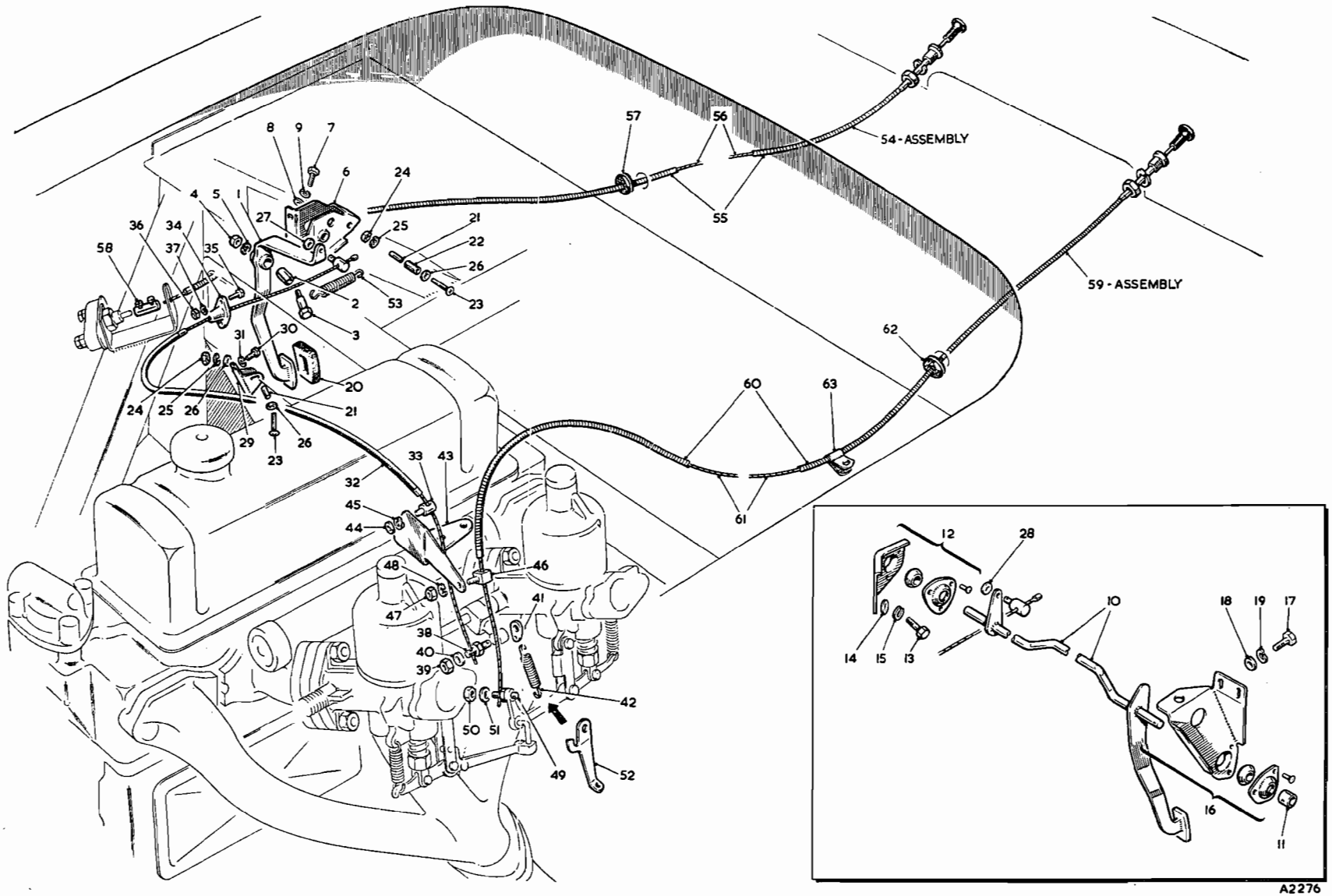
54 - ASSEMBLY
59 - ASSEMBLY
A2276

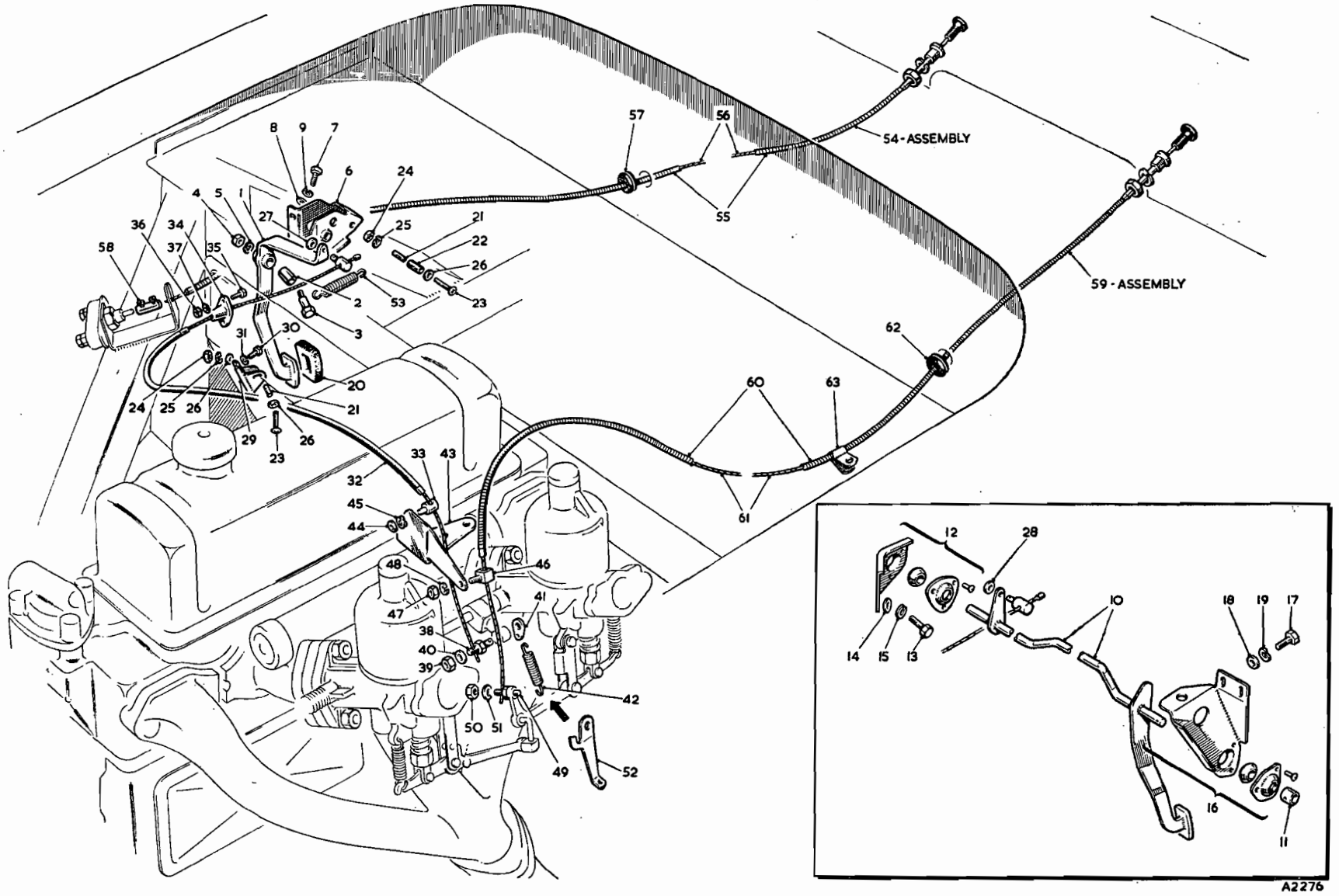

To face page A.21

Item No.	DESCRIPTION	Commencing (C) 10101 Part Number	Illus. No.	Qty. per Vehicle RHD	Qty. per Vehicle LHD	Unit of Issue	Type of Vehicle	MODIFICATIONS New Part Number	MODIFICATIONS Change Point	MODIFICATIONS Amdt. No.	REMARKS
	STARTER CONTROL										
1	**Starter cable assembly**	**AHH5327**	**AJ54**	1							
2	Cable—outer	AHH5328	AJ55	1							
3	Cable—inner	AHH5329	AJ56	1							
4	Grommet—starter control (in dash)	RFR103	AJ57	1	1						
5	**Starter cable assembly**	**AHH5330**			1						
6	Cable—outer	AHH5331			1						
7	Cable—inner	AHH5332			1						
8	Connector coupling—starter pull	3H950	AJ58	1	1						
	CHOKE CONTROL										
9	**Choke control assembly**	**AHH5333**	**AJ59**	1							
10	Cable—outer	AHH5334	AJ60	1							
11	Cable—inner	AHH5335	AJ61	1							
12	Grommet—choke control (in dash)	RFR103	AJ62	1	1						
13	**Choke control assembly**	**AHH5336**			1						
14	Cable—outer	AHH5337			1						
15	Cable—inner	AHH5338			1						
16	Clip—choke cable—to master cylinder blanking plate	PCR0311	AJ63	1	1						

Item No.	DESCRIPTION	Commencing (E) GB101 Part Number	Illus. No.	Qty. per Vehicle RHD	Qty. per Vehicle LHD	Unit of Issue	Type of Vehicle	MODIFICATIONS New Part Number	MODIFICATIONS Change Point	MODIFICATIONS Amdt. No.	REMARKS
	IGNITION EQUIPMENT										
	DISTRIBUTOR										
1	**Distributor**	**1H782**		1	1			**1H811**	**Com. (E) GB1809**		**Always use 1H811**
2	**Cover**	**17H5422**	**B1**	1	1						
3	Condenser	17H5093	B2	1	1			17H5421	] Com. (E) GB1809		
4	Contact set	17H5049	B3	1	1			17H5423			
5	Rotor arm	7H5086	B4	1	1						
6	Carbon and spring	17H5065	B5	1	1						
7	Dog—driving	17H5118	B6	1	1						
8	Plate—clamping	3H2138	B7	1	1						
9	Vacuum unit	17H5505	B8	1	1			17H5474	Com. (E) GB1809		
10	Clip—cover	17H5064	B9	2	2						
11	Cam	17H5066	B10	1	1						
12	Springs—automatic advance	37H5272	B11	1 set	1 set	1					
13	Toggle	17H5069	B12	2	2						
14	Weight	17H5095	B13	2	2						
15	Shaft and action plate	37H5273	B14	1	1						
16	Bushing	17H5071	B15	1	1						
17	Sundry parts	17H5106	B16	1 set	1 set	1					
18	Four-way spacer—cables	1G2673	B17	1	1						
19	Suppressor—ignition cables	3H1422	B18	4	4						
20	Lead—L.T. and spade terminal	27H5314	B19	1	1						
21	Screw for housing to distributor	52K2017	B20	2	2						
22	Washer for screw (spring)	LWN204	B21	2	2						
23	Washer for fixing plate to housing (plain)	PWN104	B22	2	2						
	IGNITION COIL										
24	**Coil—ignition**	**1D1963**	**B23**	1	1						
25	Nut—terminal	3H2695	B24	1	1						
26	Washer for nut	3H2696	B25	1	1						
27	Steady plate for coil	11G221	B26	1	1						
28	Bracket—steady plate/dynamo	1G2620	B27	1	1			1H1070	Com. (E) GB29710		] Alternatives
29	Bracket—steady plate/dynamo			1	1			1H1302	Com. (E) GB45905		
30	Clamp bolt—bracket	HZS0406	B28	1	1						
31	Washer for clamp bolt (plain)	PWN204	B29	3	3						
32	Washer for clamp bolt (spring)	LWN204	B30	3	3						
33	Nut for bracket and clamp bolts	FNZ104	B31	3	3						

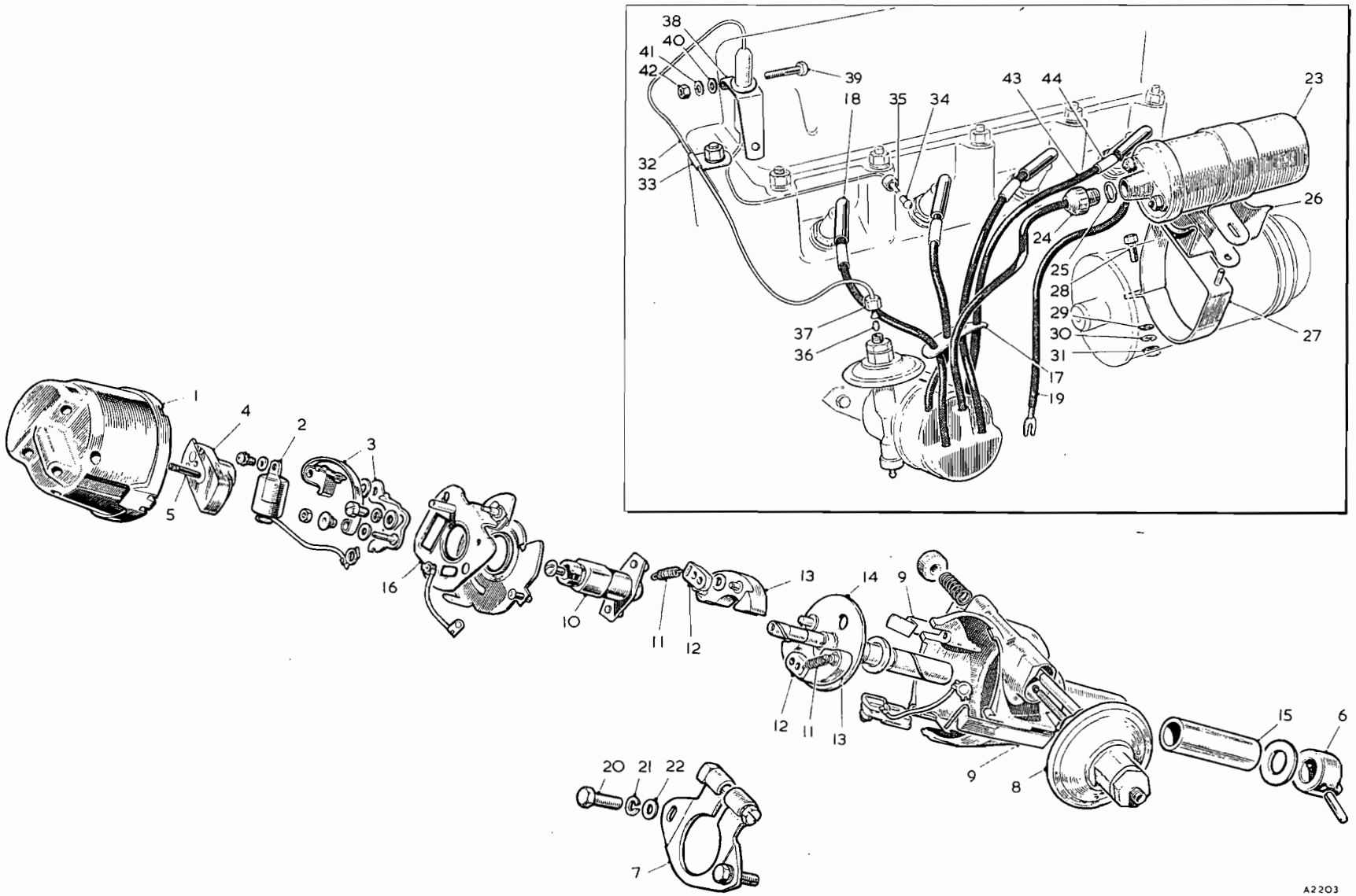
38
40
41
42
39
43
44
23
18
35
34
32
33
26
24
25
28
29
30
31
27
37
36
17
19
1
4
2
3
5
16
10
11
12
13
14
9
12
11
13
15
6
9
8
20
21
22
7
A2203

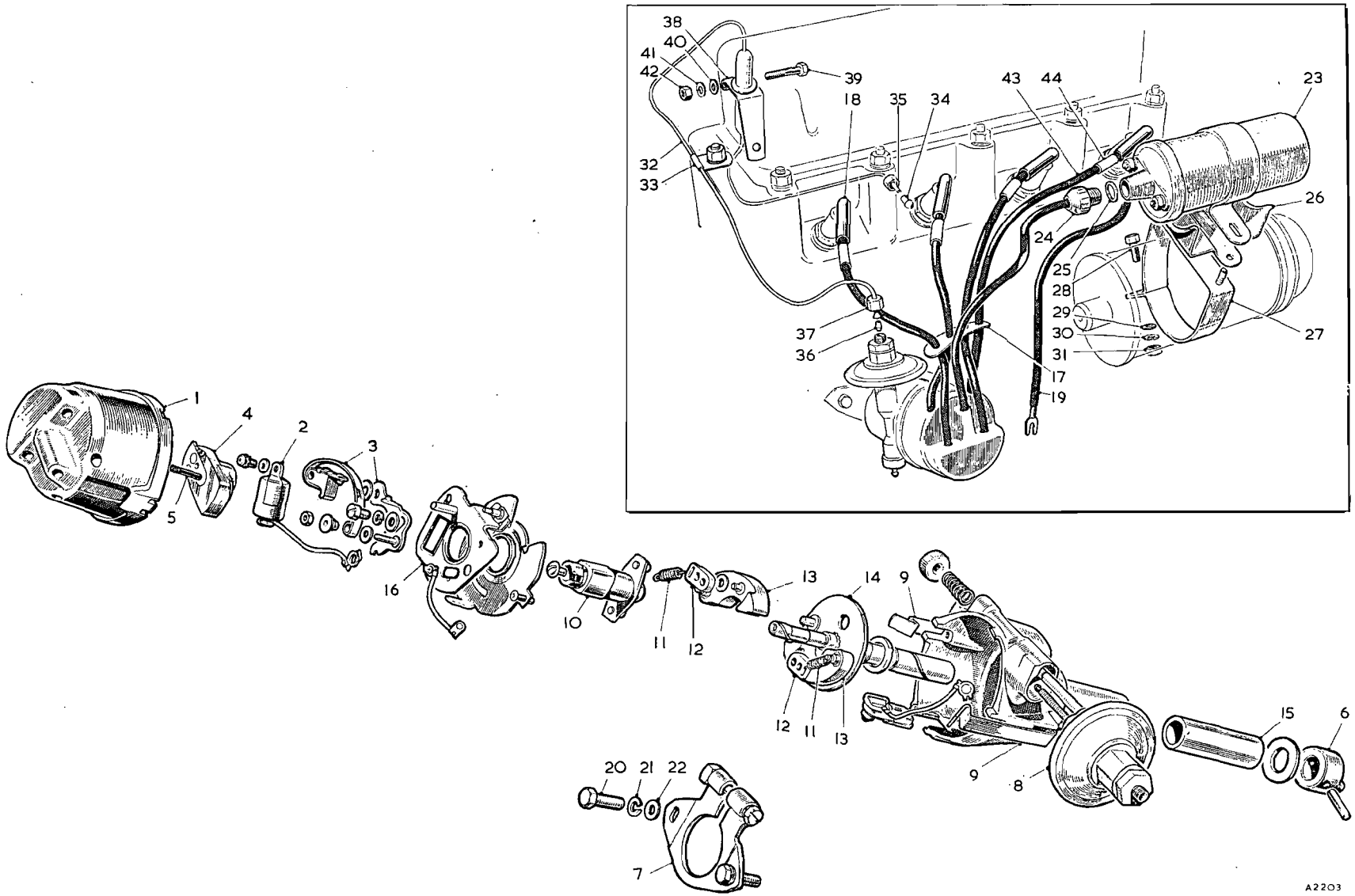

To face page B.2

Item No.	DESCRIPTION	Commencing (E) GB101 Part Number	Illus. No.	Qty. per Vehicle RHD	Qty. per Vehicle LHD	Unit of Issue	Type of Vehicle	MODIFICATIONS New Part Number	MODIFICATIONS Change Point	MODIFICATIONS Amdt. No.	REMARKS
	VACUUM IGNITION CONTROL PIPE										
1	**Pipe—vacuum ignition control (with fuel trap)**	**1H830**	**B32**	**1**	**1**			**1H919**	**Com. (E) GB11301**		
2	Clip	1K204	B33	1	1						
3	Nipple—carburetter end	2K6192	B34	1	1				Fin. (E) GB11300		
4	Tube nut—carburetter end	2K6193	B35	1	1			2A459	Com. (E) GB11301		
5	Olive	6K649	B36	1/2	1/2						Quantity increased at (E) GB 11301
6	Tube nut—distributor end	6K650	B37	1	1	12					
7	Mounting clip for fuel trap	1H841	B38	1	1						
8	Bolt for mounting clip	PMZ0216	B39	1	1						
9	Washer for bolt (plain)	PWN102	B40	1	1						
10	Washer for bolt (spring)	LWZ202	B41	1	1						
11	Nut for bolt	CNZ102	B42	1	1						
	H.T. CABLES, ETC.										
12	Terminal—sparking plug	AEC388		4	4						
13	Cable—No. 1 H.T. (13″ long)	45223	B43	A/R	A/R	100′ roll					
14	Cable—No. 2 H.T. (10½″ long)	45223		A/R	A/R						
15	Cable—No. 3 H.T. (7½″ long)	45223		A/R	A/R						
16	Cable—No. 4 H.T. (9″ long)	45223		A/R	A/R						
17	Sleeve—identity (No. 1)	2H4243	B44	1	1						
18	Sleeve—identity (No. 2)	2H4244		1	1						
19	Sleeve—identity (No. 3)	2H4245		1	1						
20	Sleeve—identity (No. 4)	2H4246		1	1						

COOLING SYSTEM

Item No.	DESCRIPTION	Commencing (C) 10101 Part Number	Illus. No.	Qty. per Vehicle RHD	Qty. per Vehicle LHD	Unit of Issue	Type of Vehicle	MODIFICATIONS New Part Number	MODIFICATIONS Change Point	MODIFICATIONS Amdt. No.	REMARKS
1	**Radiator block assembly**	**ARH120**	**C1**	**1**	**1**						
2	Cap—filler—for radiator block	ARH1022	C2	1	1						
3	Tap—drain—for radiator block	ARH1050	C3	1	1						
4	Washer for tap	ARH517	C4	1	1						
5	Packing piece—block to body	AHH5144	C5	2	2						
6	Screw for block to body	HZS0507	C6	6	6						
7	Washer for screw (plain)	PWZ105	C7	6	6						
8	Washer for screw (spring)	LWZ205	C8	6	6	24					
9	Drain tube	180079	C9	1	1						
10	Pipe—water pump connector	ACH5031	C10	1	1						
11	Hose for connector pipe	ACH5032	C11	1	1						
12	Clip for hose	X19546	C12	2	2						
13	Plug—connector pipe	AEK122	C13	1	1						] Not required when heater is fitted
14	Washer for plug	AEK123	C14	1	1						
15	Hose—top and bottom	AHH5143	C15	2	2						
16	Clip for hose—top and bottom	95621	C16	4	4						
17	**Case and grille assembly**	**ARH52**		**1**	**1**						
18	Case sub-assembly	ARH901	C17	1	1						
19	False nose assembly	ARH902	C18	1	1						
20	Speed fix ($\frac{3}{16}$")—nose to case	PFS106	C19	2	2						
21	Badge	ARH900	C20	1	1						
22	Washer for badge (plain)	PWZ103	C21	1	1						
23	Washer for badge (D/C spring)	AJD7712	C22	1	1						
24	Nut for badge	FNZ103	C23	1	1						
25	Grille assembly	ARH883	C24	1	1						
26	Stud—grille retaining	ARH898	C25	2	2						
27	Stud—grille lower fixing	ARH899	C26	2	2						
28	Washer for grille fixing studs	ARH931	C27	2	2						
29	Washer for grille studs (spring)	LWZ203	C28	4	4						
30	'D' washer for grille studs	ARJ509	C29	8	8						
31	Nut for grille studs	FNZ103	C30	4	4						
32	Piping—grille (46")	AHH5179	C31	1	1						
33	Screw—case/grille to body	HPZ0404	C32	6	6						
34	Washer for screw—case/grille to body	PWZ204	C33	6	6						
35	Washer for screw—case/grille to body (spring)	LWZ204	C34	6	6						

ARH52

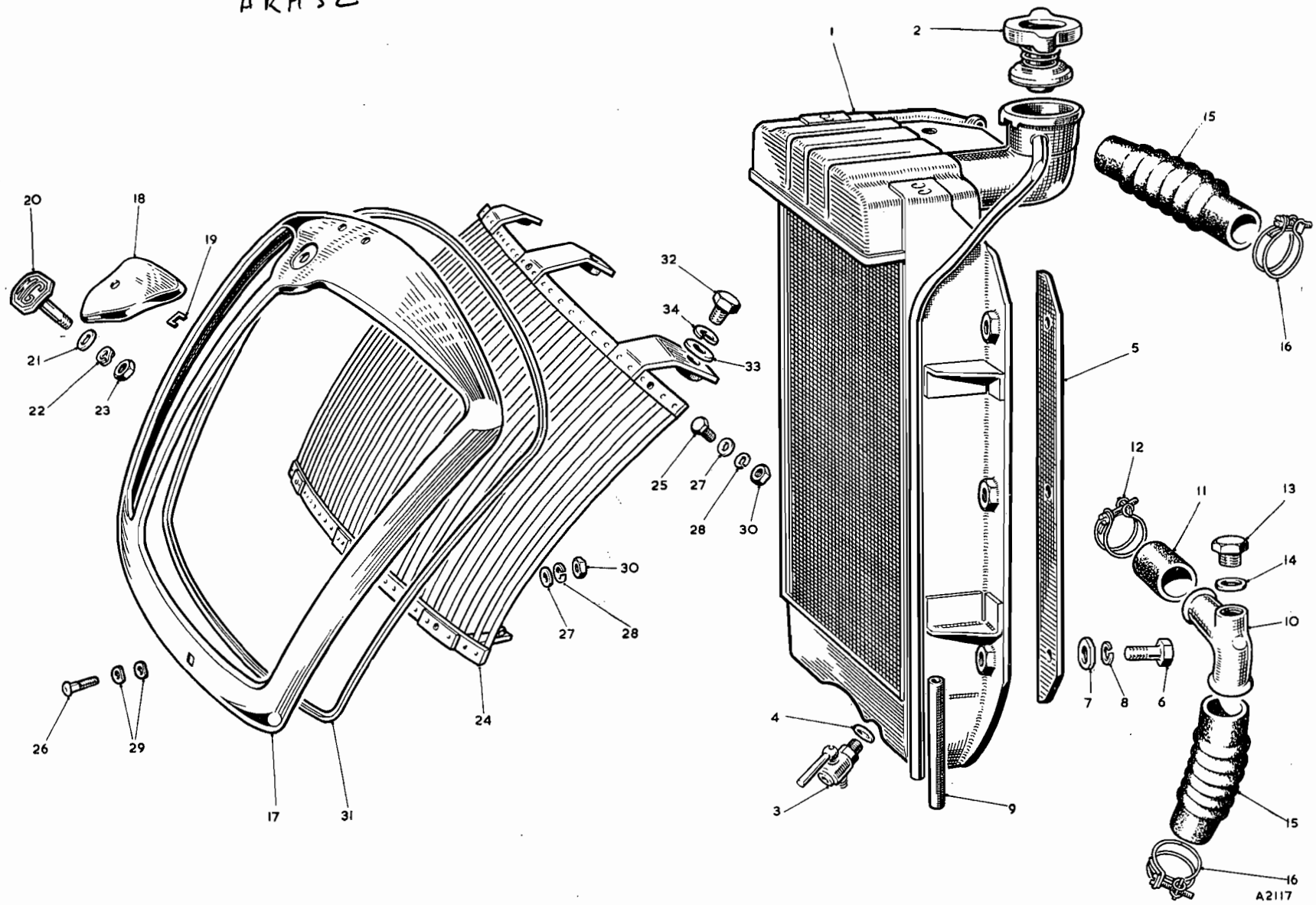

To face page C.1

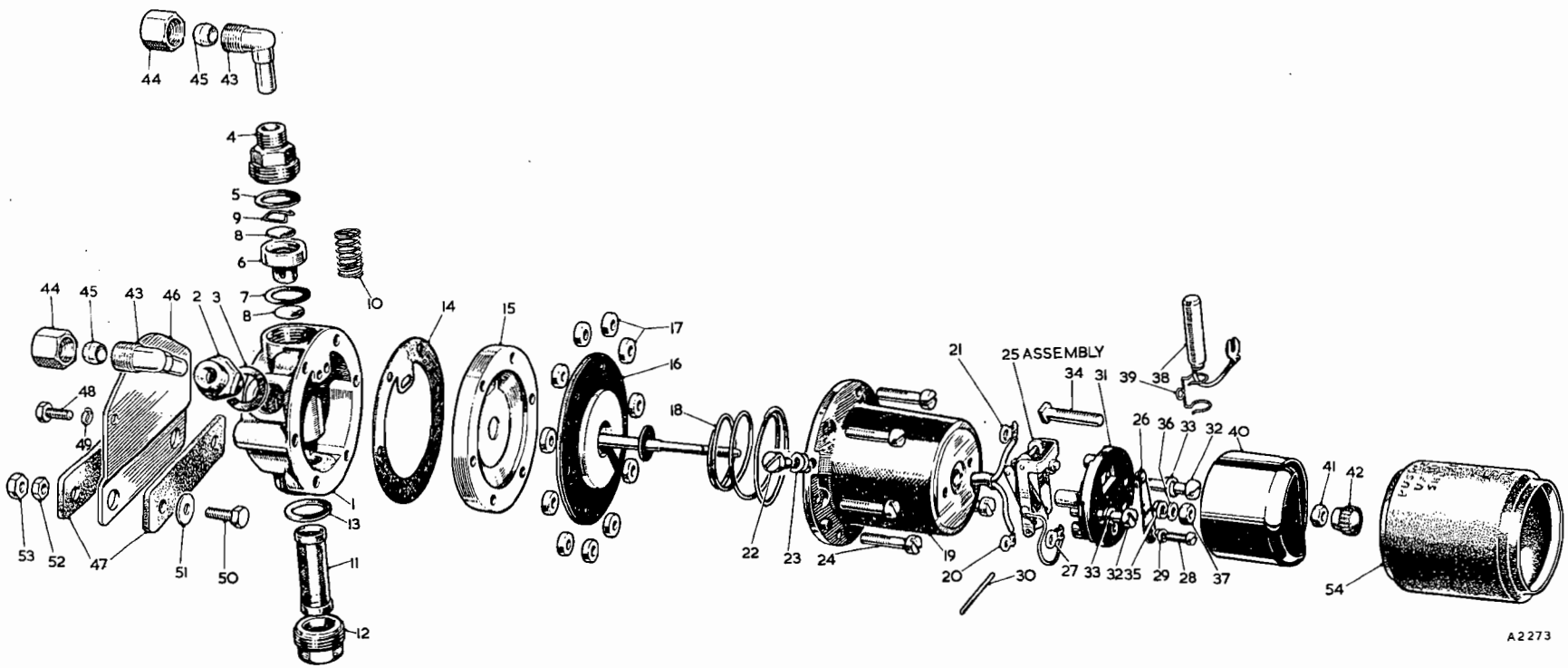
44
45
43
4
5
9
8
6
10
44
45
43
46
2
3
7
8
14
15
17
16
18
21
25 ASSEMBLY
34
31
39
38
48
49
26
36
33
32
40
41
42
53
52
47
51
50
1
13
11
12
22
23
24
19
20
30
27
33
32
35
29
28
37
54
A2273

FUEL SYSTEM

FUEL PUMP

Item No.	DESCRIPTION	Commencing (C) 10101 Part Number	Illus. No.	Qty. per Vehicle RHD	Qty. per Vehicle LHD	Unit of Issue	Type of Vehicle	MODIFICATIONS New Part Number	MODIFICATIONS Change Point	MODIFICATIONS Amdt. No.	REMARKS
1	**Pump assembly**	**AUA54**		1	1						
2	Body	AUA4080	D1	1	1						
3	Union—inlet	AUA887	D2	1	1						
4	Washer—union to body	AUA1405	D3	1	1						
5	Union—outlet	AUA1422	D4	1	1						
6	Washer—union to body	AUA1442	D5	1	1						
7	Cage—valve	AUA1416	D6	1	1						
8	Washer—cage	AUA1479	D7	1	1						
9	Disc—valve	AUA839	D8	2	2						
10	Clip—valve cage	AUA840	D9	1	1						
11	Spring—valve	AUA508	D10	1	1						
12	Filter	AUA1464	D11	1	1						
13	Plug—filter	AUA1421	D12	1	1						
14	Washer—plug	AUA1442	D13	1	1						
15	Joint—body to plate	AUA4082	D14	1	1						
16	Plate—body	AUA4081	D15	1	1						
17	**Diaphragm assembly**	**AUA6010**	**D16**	1	1						
18	Roller	AUA1433	D17	11	11						
19	Spring	AUA1785	D18	1	1						
20	**Coil housing**	**AUA6003**	**D19**	1	1						
21	Tag—5 B.A. terminal	AUA1455	D20	1	1						
22	Tag—2 B.A. terminal	AUA1456	D21	1	1						
23	Screw—earth	AUA4850	D22	1	1						
24	Washer for earth screw (spring)	AUA1863	D23	2	2						
25	Screw—housing to body	AUA4083	D24	6	6						
26	**Rocker and blade**	**AUA6020**	**D25**	1	1						
27	Blade	AUA6032	D26	1	1						
28	Tag—2 B.A. terminal	AUA1456	D27	1	1						
29	Screw for blade	AUA847	D28	1	1						
30	Washer for screw (spring)	AUA868	D29	1	1						
31	Spindle for contact breaker	AUA1435	D30	1	1						
32	**Pedestal**	**AUA6034**	**D31**	1	1						
33	Screw—pedestal to housing	AUA1459	D32	2	2						
34	Washer for screw (spring)	AUA1863	D33	2	2						
35	Screw for terminal	AUA1468	D34	1	1						
36	Washer for screw (spring)	AUA1863	D35	1	1						
37	Washer for screw (lead)	AUA1662	D36	1	1						
38	Nut for screw (recessed)	AUA1661	D37	1	1						
39	**Condenser**	**AUA5060**	**D38**	1	1						
40	Clip for condenser	AUA5059	D39	1	1						
41	**Cover—end**	**AUA5078**	**D40**	1	1						
42	Nut for cover	AUA878	D41	1	1						
43	Knob—terminal	AUA869	D42	1	1						

Item No.	DESCRIPTION	Commencing (C) 10101 Part Number	Illus. No.	Qty. per Vehicle RHD	Qty. per Vehicle LHD	Unit of Issue	Type of Vehicle	MODIFICATIONS New Part Number	MODIFICATIONS Change Point	MODIFICATIONS Amdt. No.	REMARKS
	Fuel Pump—*continued*										
1	Elbow for pump	AUA1478	D43	2	2						
2	Nut for elbow	2715	D44	2	2						
3	Olive for elbow	2718	D45	2	2						
4	Bracket—pump to frame	128355	D46	1	1						
5	Rubber—bracket	53626	D47	2	2						
6	Screw—pump to bracket	AJD6155Z	D48	2	2						
7	Washer for screw (spring)	LWZ204	D49	2	2						
8	Bolt—pump mounting	HBZ0409	D50	2	2						
9	Washer for bolt (special)	AJD7212	D51	2	2						
10	Nut for bolt	FNZ104	D52	2	2						
11	Locknut for bolt	FNZ204	D53	2	2						
12	**Cover for fuel pump (rubber)**	**ACG5147**	**D54**	**1**	**1**						

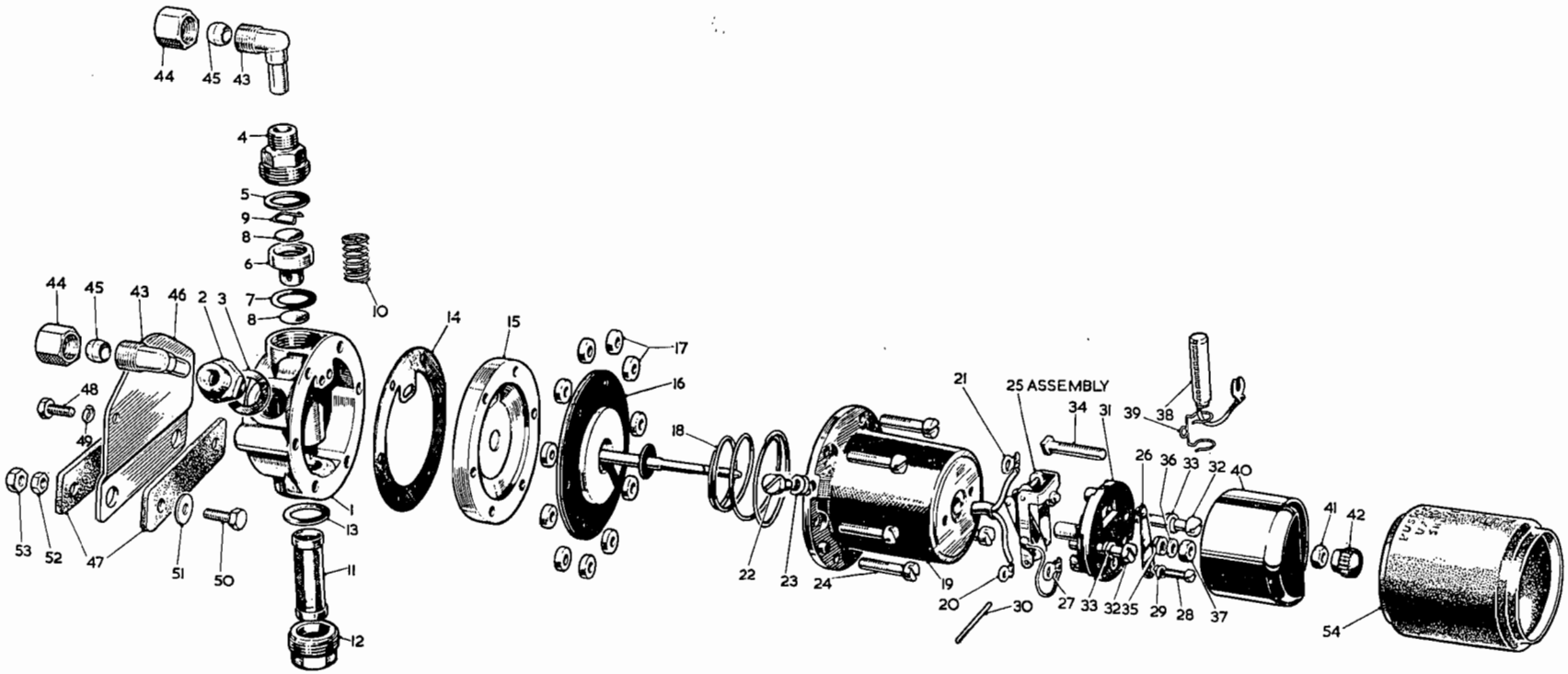

To face page D.2

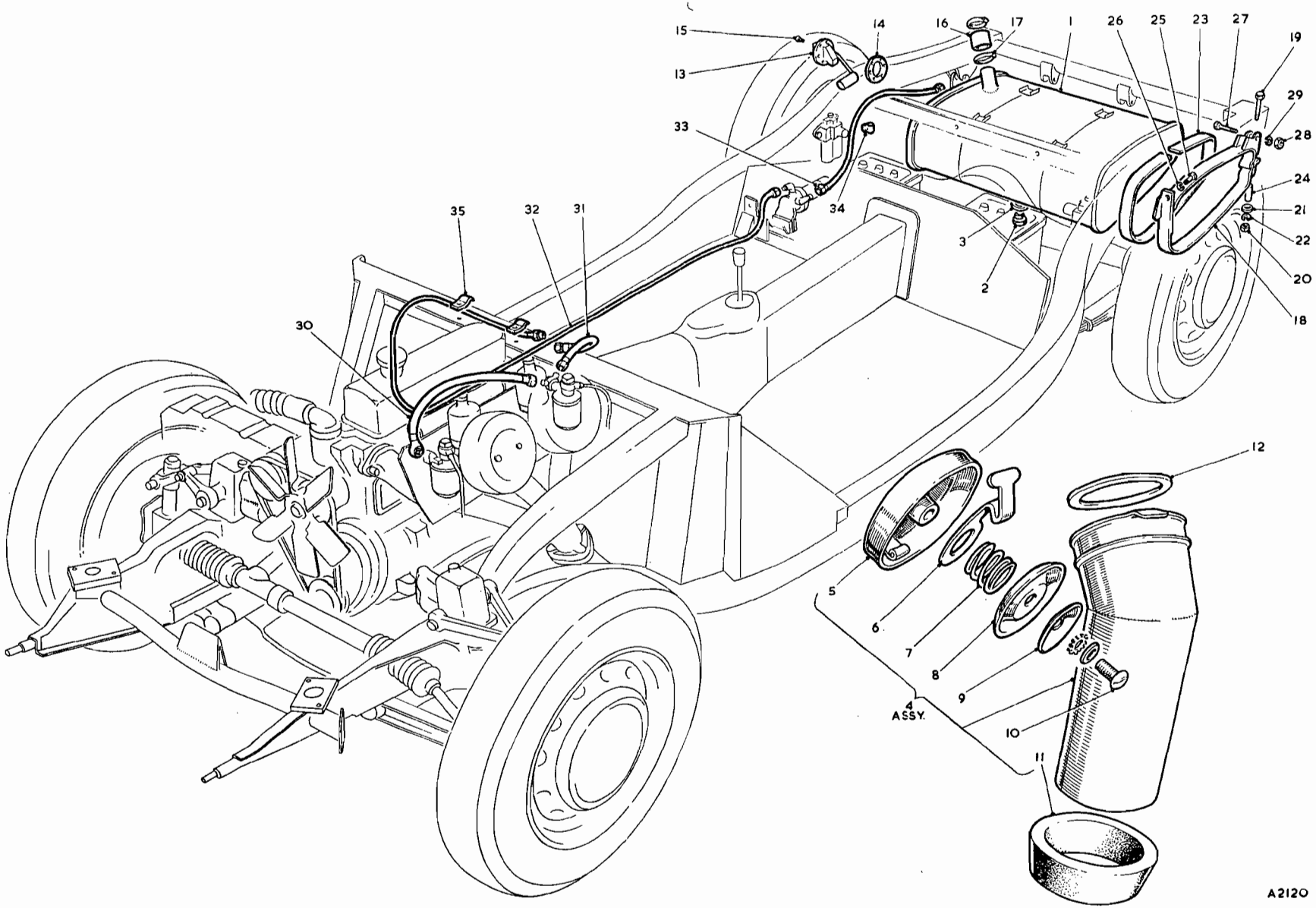

To face page D.3

Item No.	DESCRIPTION	Commencing (C) 10101 Part Number	Illus. No.	Qty. per Vehicle RHD	Qty. per Vehicle LHD	Unit of Issue	Type of Vehicle	MODIFICATIONS New Part Number	MODIFICATIONS Change Point	MODIFICATIONS Amdt. No.	REMARKS
	FUEL TANK										
1	**Tank—fuel**	**AHH5121**	**DA1**	1	1						
2	Plug	AHH5605	DA2	1	1						
3	Joint for plug	AHH5606	DA3	1	1						
4	**Filler extension**	**AHH5104**	**DA4**	1	1						
5	**Cap—filler**	**ACH5781**	**DA5**	1	1						
6	Lever—filler cap	97H474	DA6	1	1						
7	Spring—release	97H2048	DA7	1	1						
8	Plate—sealing	97H2049	DA8	1	1						
9	Washer—dished-type	97H2050	DA9	1	1						
10	Screw for cap to filler	97H2056	DA10	1	1						
11	Ring—sealing	ACH5850	DA11	1	1						
12	Ferrule—filler extension (rubber)	ACH5780	DA12	1	1						
13	Tank unit attachment	AHH5114	DA13	1	1						
14	Gasket—cork—tank attachment	ACB5468	DA14	1	1						
15	Screw for tank unit to tank	ACA5127	DA15	6	6						
16	Hose—filler connection	AHH5286	DA16	1	1						
17	Clip—hose	95482	DA17	2	2						
18	**Strap and mounting assembly**	**AHH5107**	**DA18**	2	2						
19	Bolt	HBZ0422	DA19	2	2						
20	Nut	LNZ104	DA20	2	2						
21	Washer (plain)	PWZ104	DA21	2	2						
22	Washer (spring)	LWZ204	DA22	2	2						
23	Packing strap—tank mounting (100″)	AHH5115	DA23	2	2						
24	Distance piece—rear mounting	AHH5113	DA24	2	2						
25	Screw—front mounting	HZS0505	DA25	2	2						
26	Washer (spring)—front mounting	LWZ205	DA26	2	2	24					
27	Bolt for rear mounting	HBZ0416	DA27	2	2						
28	Nut for rear mounting	FNZ104	DA28	2	2						
29	Washer (spring)—rear mounting	LWZ204	DA29	2	2						
	FUEL PIPES										
30	**Pipe—flexible—between carburetters**	**ACH8977**	**DA30**	1	1						
31	**Pipe—flexible—main pipe to carburetter**	**AHH5544**	**DA31**	1	1						
32	**Pipe assembly—fuel pump to carburetters**	**AHH5289**	**DA32**	1	1						
33	**Pipe assembly—tank to fuel pump**	**AHH5291**	**DA33**	1	1						
34	Clip for pipe to rear shock absorber bolt	54516	DA34	1	1						
35	Clip for fuel pipe to bulkhead	CHR0511	DA35	2	2						

Item No.	DESCRIPTION	Commencing (E) GB101 Part Number	Illus. No.	Qty. per Vehicle RHD	Qty. per Vehicle LHD	Unit of Issue	Type of Vehicle	MODIFICATIONS New Part Number	MODIFICATIONS Change Point	MODIFICATIONS Amdt. No.	REMARKS
	CARBURETTER										
1	**Carburetter complete—front**	**AUC9020**		1	1						
2	**Carburetter complete—rear**	**AUC9021**		1	1						
3	**Body—front carburetter**	**AUC6031**		1	1						
4	**Body—rear carburetter**	**AUC6033**	**DB1**	1	1						
5	Pin—piston lifting	AUC1149	DB2	1	1						
6	Spring for lifting pin	AUC1151	DB3	1	1						
7	Circlip for pin (Truarc)	AUC1058	DB4	1	1						
8	**Union—automatic ignition—rear carburetter**	**AUC4490**	**DB5**	1	1						
9	**Chamber and piston assembly—suction**	**AUC8019**	**DB6**	1	1						
10	Cap and damper assembly	AUC8102	DB7	1	1						
11	Washer for cap (fibre)	AUC4900	DB8	1	1						
12	Spring for piston (red)	AUC4387	DB9	1	1						
13	Thrust washer for piston spring	AUC3071	DB10	1	1						
14	Screw—chamber to body	AUC2175	DB11	3	3						
15	Washer for screw	AUA4643	DB12	3	3						
16	**Jet assembly**	**AUC8182**	**DB13**	1	1						
17	Nut—adjusting	AUC2121	DB14	1	1						
18	Spring—adjusting	AUC2114	DB15	1	1						
19	Nut—gland sealing	AUC3232	DB16	1	1						
20	Ring (brass)—sealing	AUC2117	DB17	1	1						
21	Ring (neoprene)—sealing	AUC3119	DB18	1	1						
22	Washer—bearing—bottom half	AUC3233	DB19	1	1						
23	Bearing—bottom	AUC3231	DB20	1	1						
24	Washer—gland (cork)	AUC2120	DB21	2	2						
25	Washer—gland (brass)	AUC2119	DB22	2	2						
26	Spring—gland	AUC1158	DB23	1	1						
27	Bearing—top	AUC3230	DB24	1	1						
28	Washer for top bearing (copper)	AUC2122	DB25	1	1						
29	**Needle**	**AJH5292**	**DB26**	1	1						**Refer to Workshop Manual for needle sizes**
30	Screw for needle (locking)	AUC2468	DB27	1	1						
31	Lever—front carburetter	AUC5091	DB28	1	1						
32	Lever—rear carburetter	AUC5092	DB29	1	1						
33	Spring for lever return	AUC4667	DB30	1	1						
34	Link for lever to body	AUC4819	DB31	1	1						
35	Pin for link to body	AUC2381	DB32	1	1						
36	Pin for link to lever	AUC2381	DB33	1	1						
37	Pin for jet to lever	AUC2381	DB34	1	1						
38	Pin for lever to cam connecting rod—front carburetter	AUC4631	DB35	1	1						
39	Split pin	AUC2109	DB36	11	11						

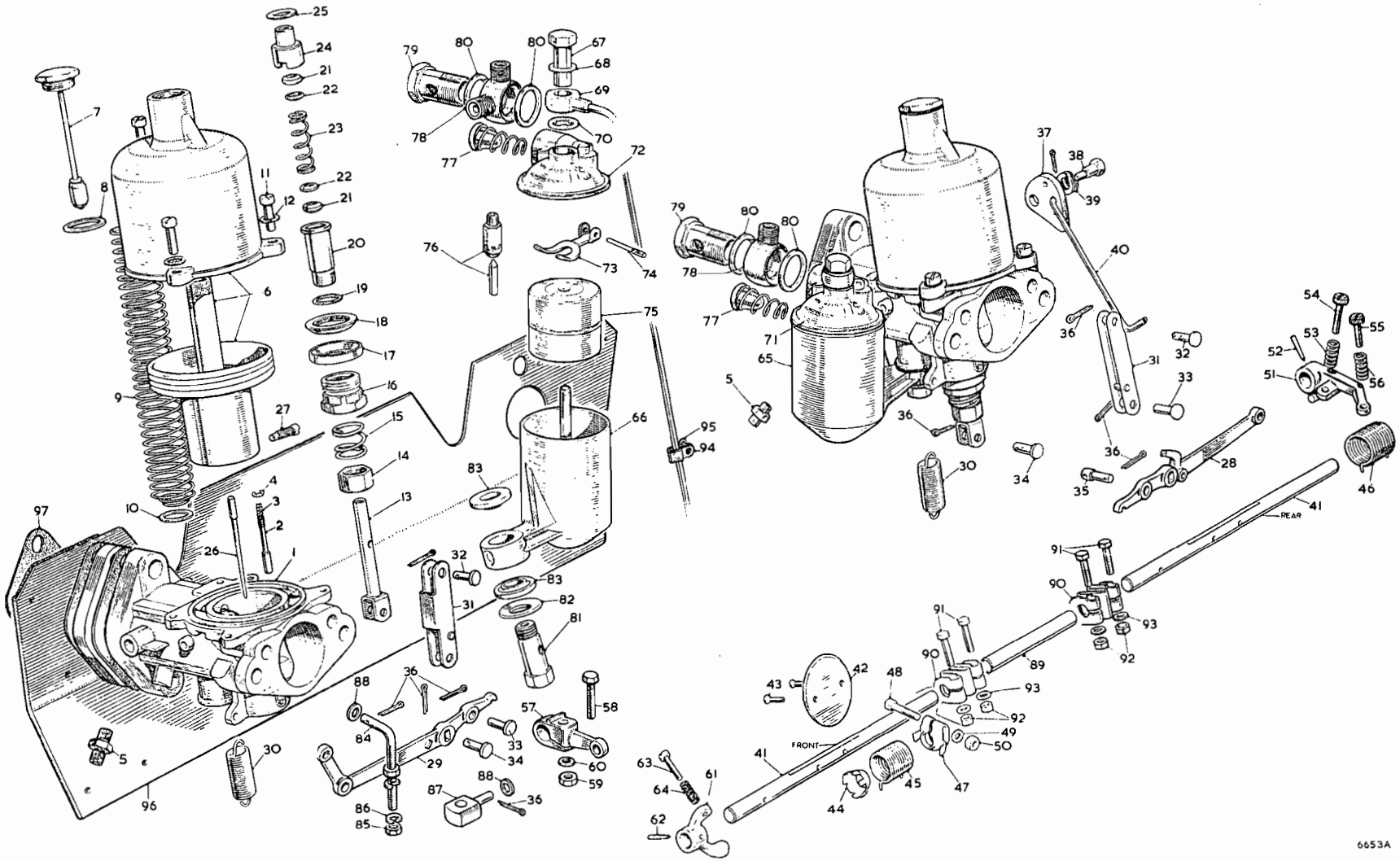

To face page D.4

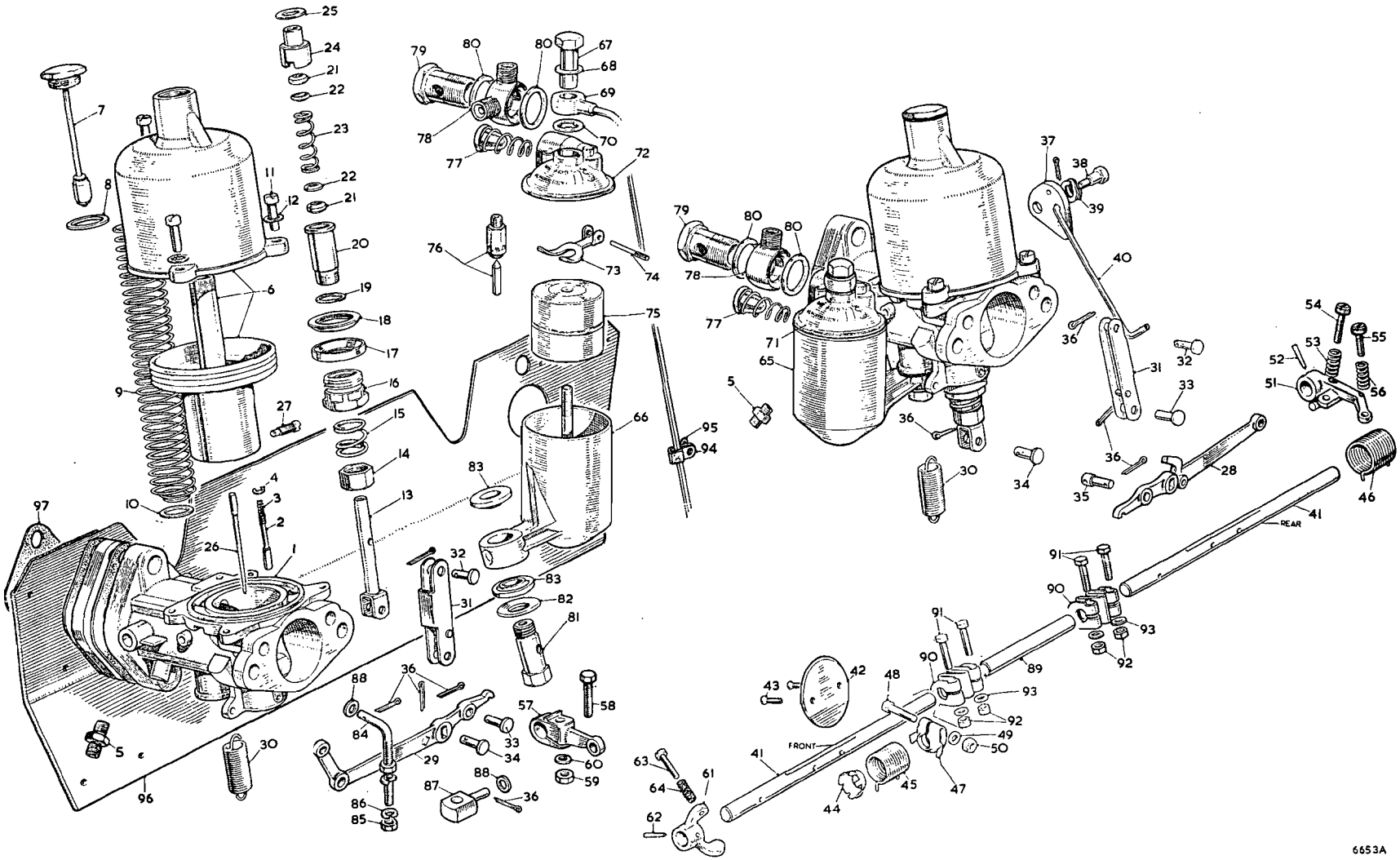

To face page D.5

Item No.	DESCRIPTION	Commencing (E) GB101 Part Number	Illus. No.	Qty. per Vehicle RHD	Qty. per Vehicle LHD	Unit of Issue	Type of Vehicle	MODIFICATIONS New Part Number	MODIFICATIONS Change Point	MODIFICATIONS Amdt. No.	REMARKS
	Carburetter—*continued*										
1	**Cam—slow-running—front carburetter**	**AUC4730**	**DB37**	**1**	**1**						
2	Bolt—cam pivot—front carburetter	AUC3471	DB38	1	1						
3	Washer for pivot bolt (spring)	AUC3472	DB39	1	1						
4	Rod—link—jet lever to cam—front carburetter	AUC4732	DB40	1	1						
5	**Spindle—throttle—front and rear carburetter**	**AUC3242**	**DB41**	**1**	**1**						
6	Disc	AUC3116	DB42	1	1						
7	Screw for disc	AUC1358	DB43	2	2						
8	Plate—return spring anchor	AUC4770	DB44	1	1						
9	Spring—throttle spindle return—front carburetter	AUC4781	DB45	1	1						
10	Spring—throttle spindle return—rear carburetter	AUC4782	DB46	1	1						
11	End clip—spindle—front and rear carburetters	AUC4771	DB47	1	1						
12	Bolt—end clip	AUC2669	DB48	1	1						
13	Washer for bolt (plain)	AUC4612	DB49	1	1						
14	Nut for bolt	AUC2673	DB50	1	1						
15	Lever—throttle stop—front carburetter	AUC4713	DB51	1	1						
16	Pin—lever to spindle (tapered)	AUC2106	DB52	1	1						
17	Spring for lever stop screw	AUC2451	DB53	1	1						
18	Screw—lever stop—adjusting	AUC2521	DB54	1	1						
19	Screw—slow-running adjusting—front carburetter	AUC3464	DB55	1	1						
20	Spring—adjusting screw—front carburetter	AUC3465	DB56	1	1						
21	Lever—throttle spindle—rear carburetter	AUC1501	DB57	1	1						
22	Bolt for lever	AUC2694	DB58	1	1						
23	Nut for lever bolt	AUC2156	DB59	1	1						
24	Washer for lever bolt (spring)	AUC2246	DB60	1	1						
25	Lever—throttle stop—rear carburetter	AUC2198	DB61	1	1						
26	Pin—lever to spindle (tapered)	AUC2106	DB62	1	1						
27	Screw—lever stop—adjusting	AUC2521	DB63	1	1						
28	Spring for lever stop screw	AUC2451	DB64	1	1						
29	**Float-chamber—front**	**AUC3496**	**DB65**	**1**	**1**						
30	**Float-chamber—rear**	**AUC3495**	**DB66**	**1**	**1**						
31	Cap nut—lid	AUC1867	DB67	2	2						
32	Washer (aluminium)	AUC1557	DB68	2	2						
33	Pipe assembly—drain—front and rear carburetters	AUC3202	DB69	2	2						
34	Washer (fibre)	AUC1928	DB70	2	2						
35	Lid—float-chamber—front carburetter	AUC4261	DB71	1	1						
36	Lid—float-chamber—rear carburetter	AUC4260	DB72	1	1						
37	Lever—hinged—float	AUC1980	DB73	2	2						
38	Pin for hinged lever—float	AUC1152	DB74	2	2						
39	**Float**	**AUC1123**	**DB75**	**2**	**2**						
40	Needle and seat assembly	AUC8170	DB76	2	2						
41	Filter	AUC2139	DB77	2	2						
42	Union—banjo—double—rear	AUC1832	DB78	1	1						
43	Bolt—banjo	AUC2698	DB79	2	2						
44	Washer for banjo bolt (fibre)	AUC2141	DB80	4	4						
45	Bolt—holding-up—float-chamber	AUC1135	DB81	2	2						
46	Washer for holding-up bolt (fibre)	AUC1137	DB82	2	2						
47	Grommet for holding-up bolt (rubber)	AUC1334	DB83	4	4						

Item No.	DESCRIPTION	Commencing (E) GB101 Part Number	Illus. No.	Qty. per Vehicle RHD	Qty. per Vehicle LHD	Unit of Issue	Type of Vehicle	MODIFICATIONS New Part Number	MODIFICATIONS Change Point	MODIFICATIONS Amdt. No.	REMARKS
	Carburetter—*continued*										
1	**Rod—jet lever connecting**	**AUC4915**	**DB84**	**1**	**1**						
2	Nut for rod	AUC2156	DB85	2	2						
3	Washer for nut (spring)	AUC1863	DB86	2	2						
4	Trunnion for rod	AUC4916	DB87	1	1						
5	Washer (brass)	AUC1006	DB88	1	1						
6	**Rod—throttle spindle connecting**	**AUC2402**	**DB89**	**1**	**1**						
7	Coupling—rod to spindle	AUC4334	DB90	2	2						
8	Bolt for coupling	AUC2669	DB91	4	4						
9	Nut for bolt	AUC2673	DB92	4	4						
10	Washer for bolt	AUC4612	DB93	4	4						
11	Clip for drain pipe	AEH550	DB94	1	1						
12	Washer for clip	PWZ104	DB95	1	1						
13	**Shield—heat**	**AHH5533**	**DB96**	**1**	**1**						
14	Joint—heat shield	AEH551	DB97	2	2						

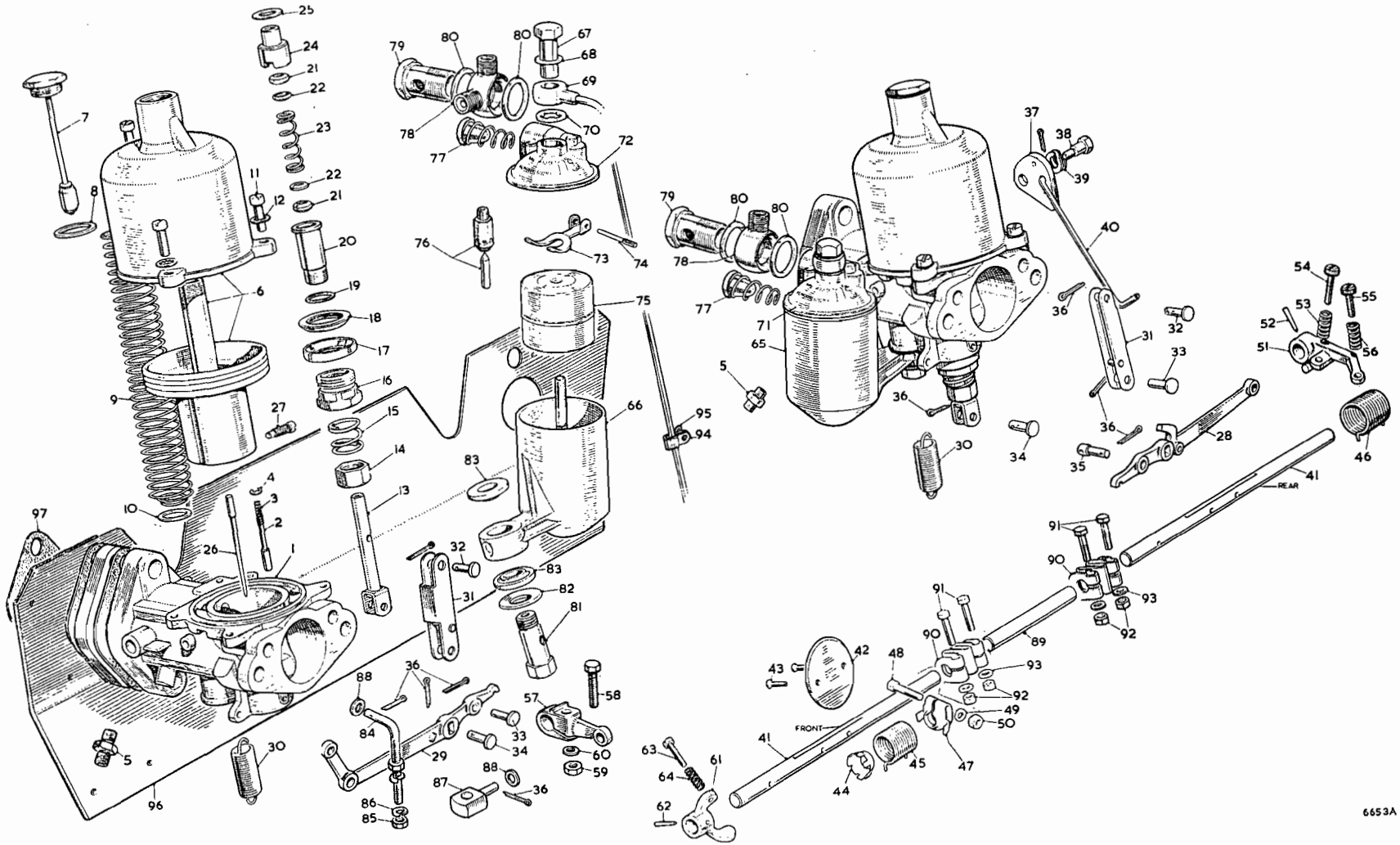

To face page D.6

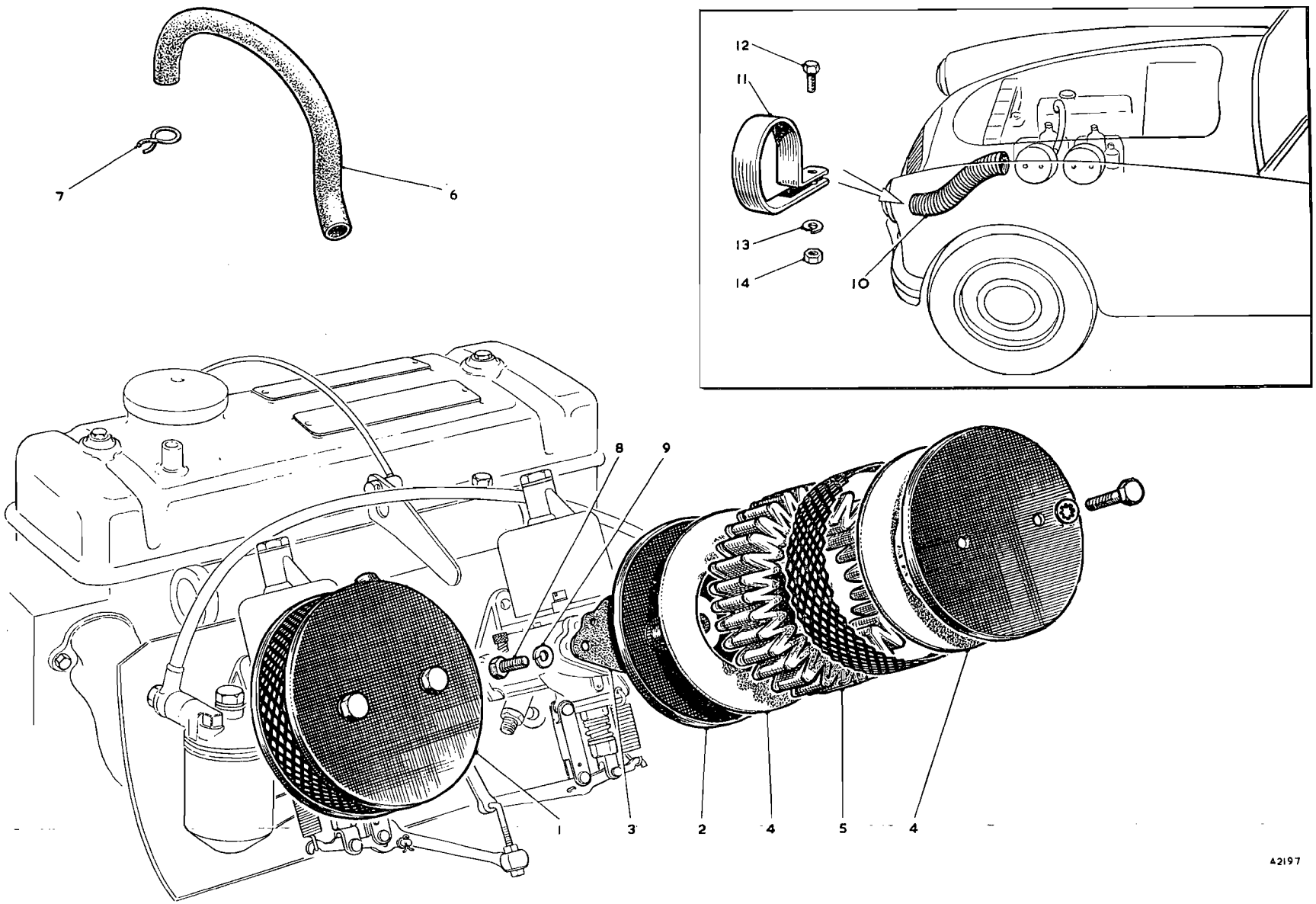

To face page D.7

Item No.	DESCRIPTION	Commencing (E) GB101 Part Number	Illus. No.	Qty. per Vehicle RHD	Qty. per Vehicle LHD	Unit of Issue	Type of Vehicle	MODIFICATIONS New Part Number	MODIFICATIONS Change Point	MODIFICATIONS Amdt. No.	REMARKS
	AIR CLEANER										
1	**Cleaner—front air**	**AHH5147**	**DC1**	1	1						
2	**Cleaner—rear air**	**AHH5148**	**DC2**	1	1						
3	Joint—air cleaner	ACG5184	DC3	2	2						
4	Insert pad	AHH5441	DC4	4	4						
5	Element	AHH5442	DC5	2	2						
6	Pipe—air filter	AHH5149	DC6	1	1						
7	Clips for air pipe	ACA5290	DC7	2	2						
8	Set screw for cleaner to carburetters	HZS0506	DC8	4	4	24					
9	Washer for cleaner set screws	LWZ205	DC9	4	4	24					
	AIR INTAKE HOSE										
10	**Hose—carburetter cooling air intake**	**AHH5394**	**DC10**	1	1						
11	Clip for air intake hose	AHH5714	DC11	1	1						
12	Screw—hose clip to radiator duct	PMZ0316	DC12	1	1						
13	Washer for screw (spring)	LWZ203	DC13	1	1						
14	Nut for hose clip screw	FNZ103	DC14	1	1						

CLUTCH

CLUTCH COMPONENTS

Item No.	DESCRIPTION	Commencing (E) GB101 Part Number	Illus. No.	Qty. per Vehicle RHD	Qty. per Vehicle LHD	Unit of Issue	Type of Vehicle	MODIFICATIONS New Part Number	MODIFICATIONS Change Point	MODIFICATIONS Amdt. No.	REMARKS
1	**Clutch assembly**	**N.S.P.**									
2	**Cover assembly**	**7H3211**	**E1**	1	1			**27H3159**	**Com. (E) GB16226**		
3	Lever release	7H3196	E2	3	3	12					
4	Retainer for release lever	7H3001	E3	3	3	72					
5	Pin for release lever	7H3067	E4	3	3	12					
6	Spring—anti-rattle	7H3171	E5	3	3	36					
7	Strut for release lever	7H3069	E6	3	3						
8	Eyebolt and nut	27H3157	E7	3	3						
9	Plate—release lever	7H3213	E8	1	1	12					
10	Plate—pressure	7H3085	E9	1	1						
11	Spring for pressure plate	3H2914	E10	6	6			1H1024	Com. (E) GB16225		
12	**Plate—driven assembly** **(R)**	**7H3215**	**E11**	1	1						
13	Lining and rivets	8G8348		1 set	1 set	1					
14	Rivet	7H3078		22	22						
15	**Bearing assembly—release**	**7H3214**	**E12**	1	1						
16	Ring—carbon	7H3277	E13	1	1						
17	Retainer for bearing	7H3048	E14	2	2	36					
18	Screw for clutch to flywheel	HZS0507	E15	6	6						
19	Washer for screw (spring)	2K5319	E16	6	6						

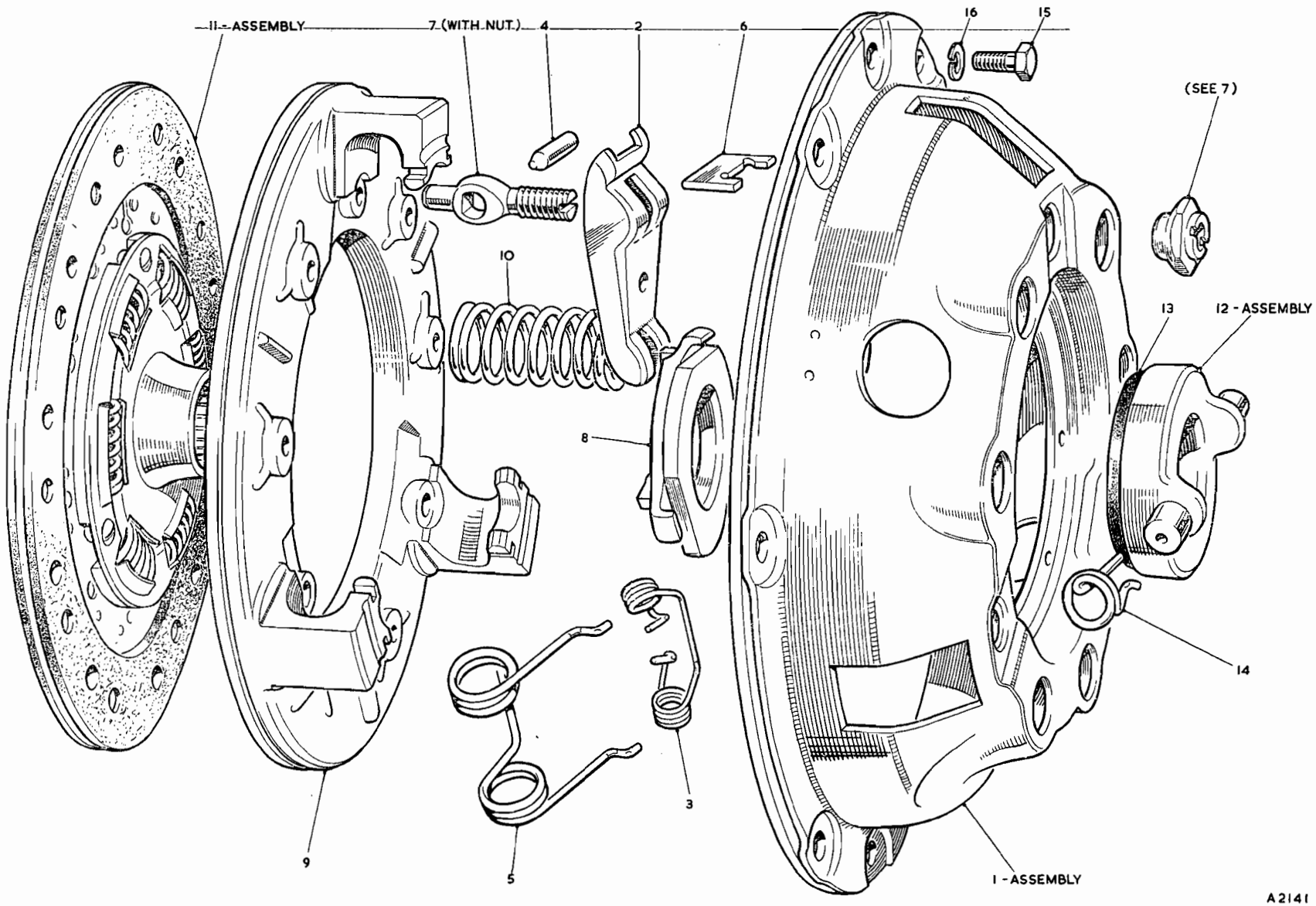

To face page E.1

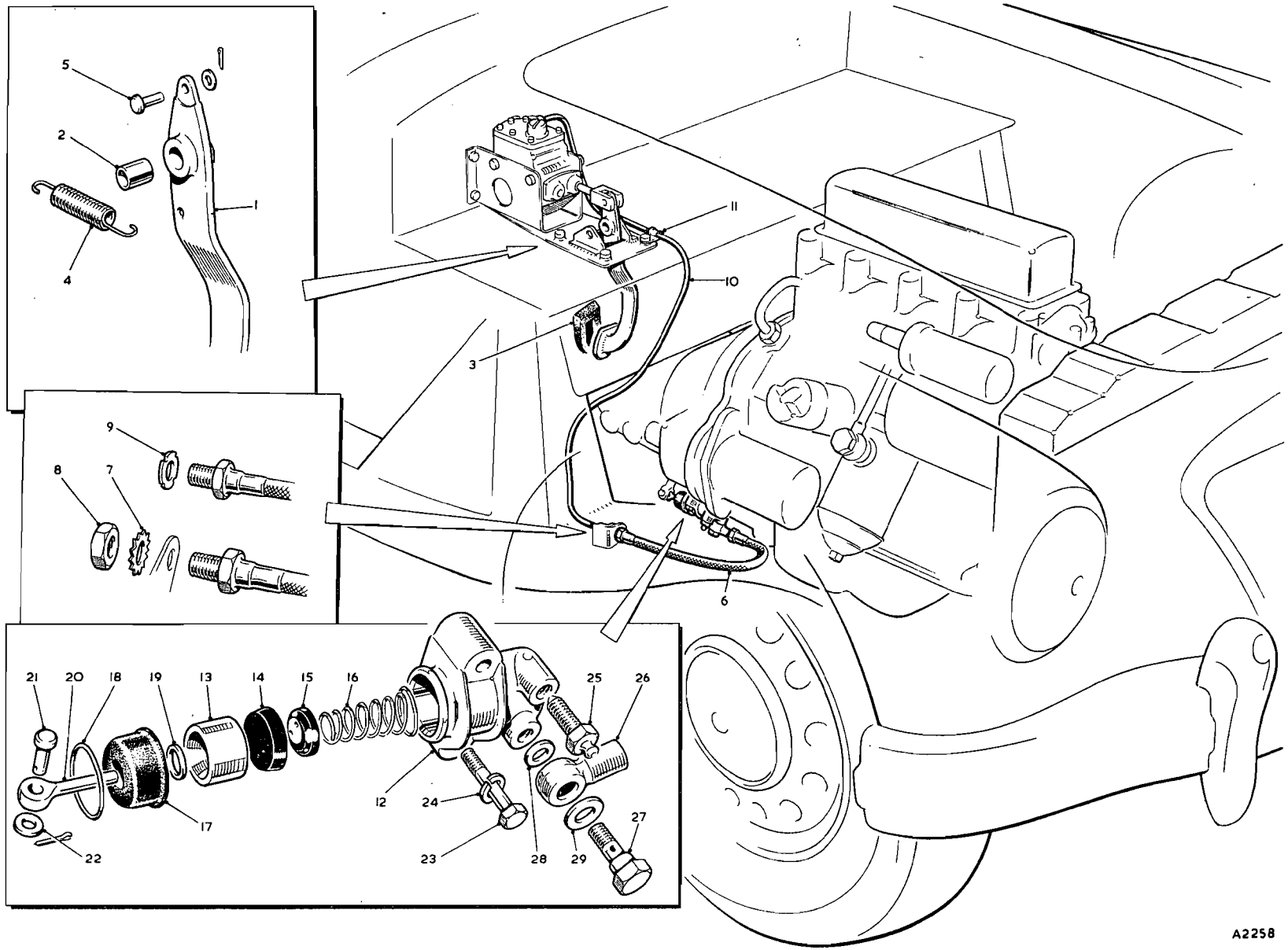

To face page E.2

Item No.	DESCRIPTION	Commencing (C) 10101 Part Number	Illus. No.	Qty. per Vehicle RHD	Qty. per Vehicle LHD	Unit of Issue	Type of Vehicle	MODIFICATIONS New Part Number	MODIFICATIONS Change Point	MODIFICATIONS Amdt. No.	REMARKS
	CLUTCH PEDAL AND LINKAGE										
1	**Pedal—clutch**	**AHH5091**	**EA1**	1				**AHH5841**	**Com. (C) 61100**		
2	**Pedal—clutch**	**AHH5117**			1			**AHH5842**	**Com. (C) 58713**		
3	Bush	185794	EA2	1	1						
4	Pad for pedal (rubber)	AHH5100	EA3	1	1						
5	Spring—pull-off—pedals	130154	EA4	2	2	6					
6	Clevis pin for clutch and brake pedals	CLZ0512	EA5	2	2						
7	Hose for clutch	7H7857	EA6	1	1						
8	Washer for hose	LWN710	EA7	1	1						
9	Locknut for hose	2K8686	EA8	1	1						
10	Joint for clutch hose	3H550	EA9	1	1						
11	**Pipe for master cylinder to clutch hose**	**AJD276**	**EA10**	1							
12	**Pipe for master cylinder to clutch hose**	**AJD118**			1						
13	Clip for clutch pipe	PCR0411	EA11	1	1						
14	Clip for clutch pipe to bulkhead	CHR0409			2						
	CLUTCH OPERATING CYLINDER										
15	**Cylinder assembly**	**ACH5457**		1	1			**7H7974**	**Com. (C) 11768**		
16	Body	7H7955	EA12	1	1			7H7983			
17	Piston	7H7003	EA13	1	1						
18	Cup for piston	7H7004	EA14	1	1						
19	Filler for piston cup	7H7560	EA15	1	1						
20	Spring for cup filler	7H7959	EA16	1	1						
21	Boot	7H7957	EA17	1	1						
22	Clip for boot (large)	7H7956	EA18	1	1						
23	Clip for boot (small)	7H7958	EA19	1	1						
24	Push-rod	7H7954	EA20	1	1						
25	Clevis pin—slave cylinder to clutch fork	CLZ0517	EA21	1	1						
26	Washer for clevis pin (plain)	PWZ105	EA22	1	1						
27	Bolt for slave cylinder to gearbox	HBZ0615	EA23	2	2			ACH8483	Com. (C) 21513		
28	Washer for bolt (spring)	LWZ206	EA24	2	2						
29	Bleeder screw	3H554	EA25	1	1						
30	Banjo for slave cylinder	3H544	EA26	1	1						
31	Bolt for banjo to slave cylinder	3H547	EA27	1	1				Fin. (C) 11767		
32	Joint for banjo	7H7456	EA28	1	1						
33	Joint for banjo	3H550	EA29	1	1						

Item No.	DESCRIPTION	Commencing (E) GB101 Part Number	Illus. No.	Qty. per Vehicle RHD	Qty. per Vehicle LHD	Unit of Issue	Type of Vehicle	MODIFICATIONS New Part Number	MODIFICATIONS Change Point	MODIFICATIONS Amdt. No.	REMARKS
	GEARBOX										
1	**Gearbox assembly**	**1H3140**		1	1			**1H3167**	**Com. (G) A101**		
								1H3362	**Com. (E) GD101**		
2	**Casing—gearbox**	**48G32**	**F1**	1	1			**48G100**	**Com. (G) A916**		**Prior to (G) A916 always use 48G109**
								48G127	**Com. (E) GD101**		
3	Stud—front cover	52K485	F2	7	7			53K2172	Com. (G) A916e		
4	Plug—drain	6K499	F3	1	1			2K5380	Com. (E) GD101		
5	Dowel—sliding shaft locating block	AEG3108	F4	2	2						
6	Welch plug	2K8158		1	1						
7	Stud—gearbox extension	52K487	F6	1	1				Fin. (G) A915		
8	Stud—gearbox extension			2	2			CHS2513	Com. (G) A916		
9	Plug—blanking	8G500	F7	2	2						
10	Joint washer—blanking plug	2K4971	F8	2	2						
11	Dust cover—clutch withdrawal lever	1G3667	F9	1	1						
12	**Dipstick**	**1G3802**	**F10**	1	1						
13	Felt	1G3804	F11	1	1						
14	**Cover—front**	**1G3642**	**F12**	1	1			**11G3197**	**Com. (G) A4378**		
15	Cover assembly—front			1	1			1H3147	Com. (G) A8011		
16	Oil seal		F13	1	1			1H3138			
17	Joint for front cover	1G3666	F14	1	1	12					
18	Nut for front cover studs	FNZ105	F15	7	7						
19	Washer for front cover studs (spring)	2K5319	F16	7	7			LWZ305	Com. (G) A916		
20	Cover—side	1G3656	F17	1	1						
21	Joint for side cover	1G3658	F18	1	1	12					
22	Set screw for side cover	52K2037	F19	7	7			53K147	Com. (G) A916		
23	Washer for side cover screw (spring)	2K5319	F20	7	7				Fin. (G) A915		
24	Washer for side cover screw (spring)			6	6			LWZ305	Com. (G) A916		
25	Countersunk screw—side cover	52K1226	F21	3	3			53K162			
26	Washer for countersunk screw (shakeproof)	6K9012	F22	3	3						
27	Washer for side cover (fibre)			1	1			2K4958	Com. (G) A916		
28	Washer for side cover (plain)			1	1			PWZ105			
29	**Extension—gearbox**	**1H3084**	**F23**	1	1			**1H3149**	**Com. (G) A101**		
								1H3273	**Com. (E) GD101**		
30	Bush	1G3418	F24	1	1				Fin. (E) GB51767		
31	Bearing—rear extension			1	1			6K529	Com. (E) GD101		
32	Oil seal assembly	11G3147	F25	1	1	6		1H3339	Com. (G) A101		
								1H3275	Com. (E) GD101		
33	Circlip for oil seal			1	1			CCN240			
34	Joint for extension to gearbox	1G3712	F26	1	1	12					
35	Nut for gearbox extension stud	FNZ105	F27	2	2						
36	Set screw for gearbox extension	HBZ0509	F28	7	7				Fin. (G) A915		
37	Set screw for gearbox extension			6	6			HCZ0510	Com. (G) A916		
38	Washer for stud and set screws (spring)	LWZ205	F29	8	8	24		LWZ305			
39	Plug for gearbox extension (taper)	2K1356	F30	1	1	36					

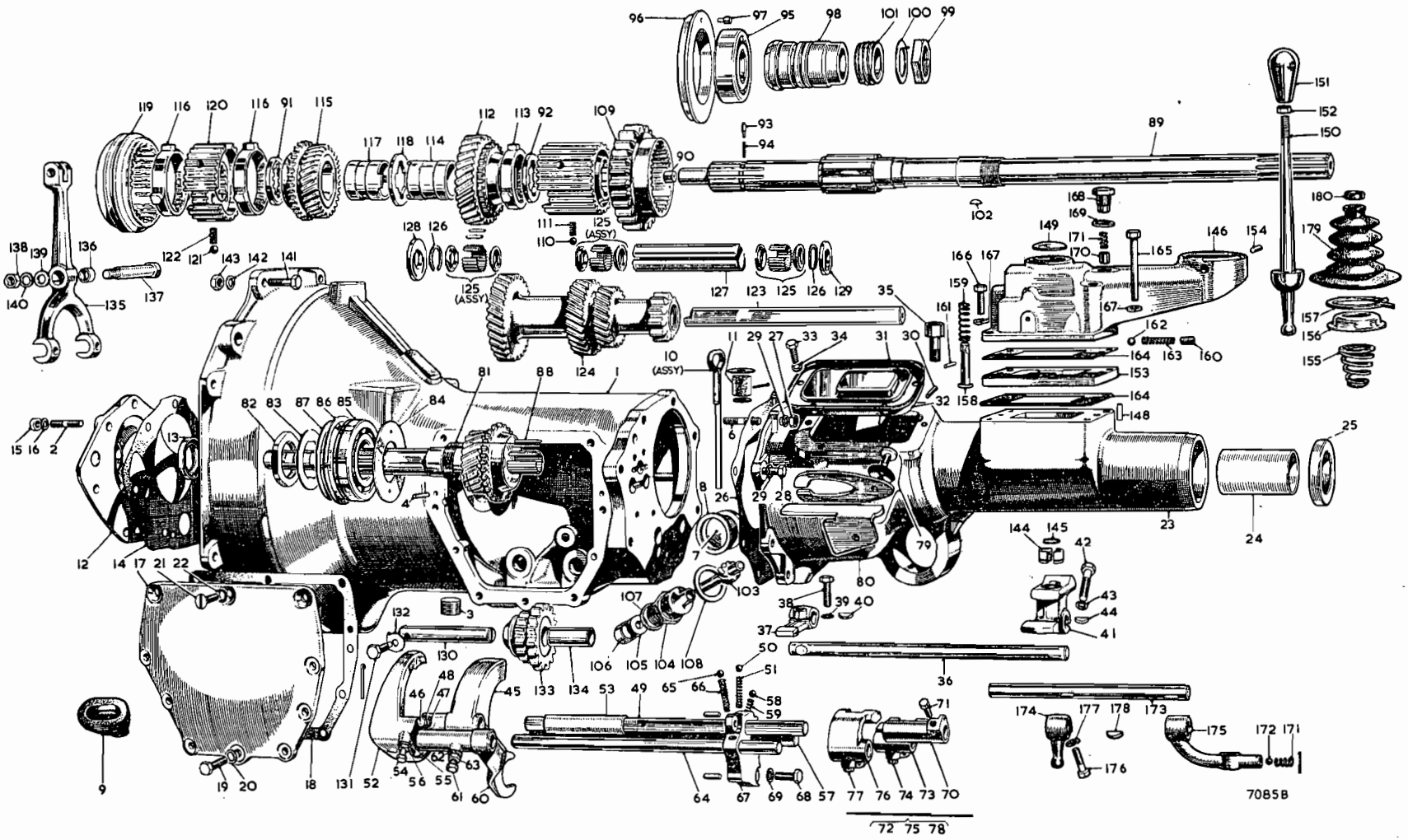

To face page F.1

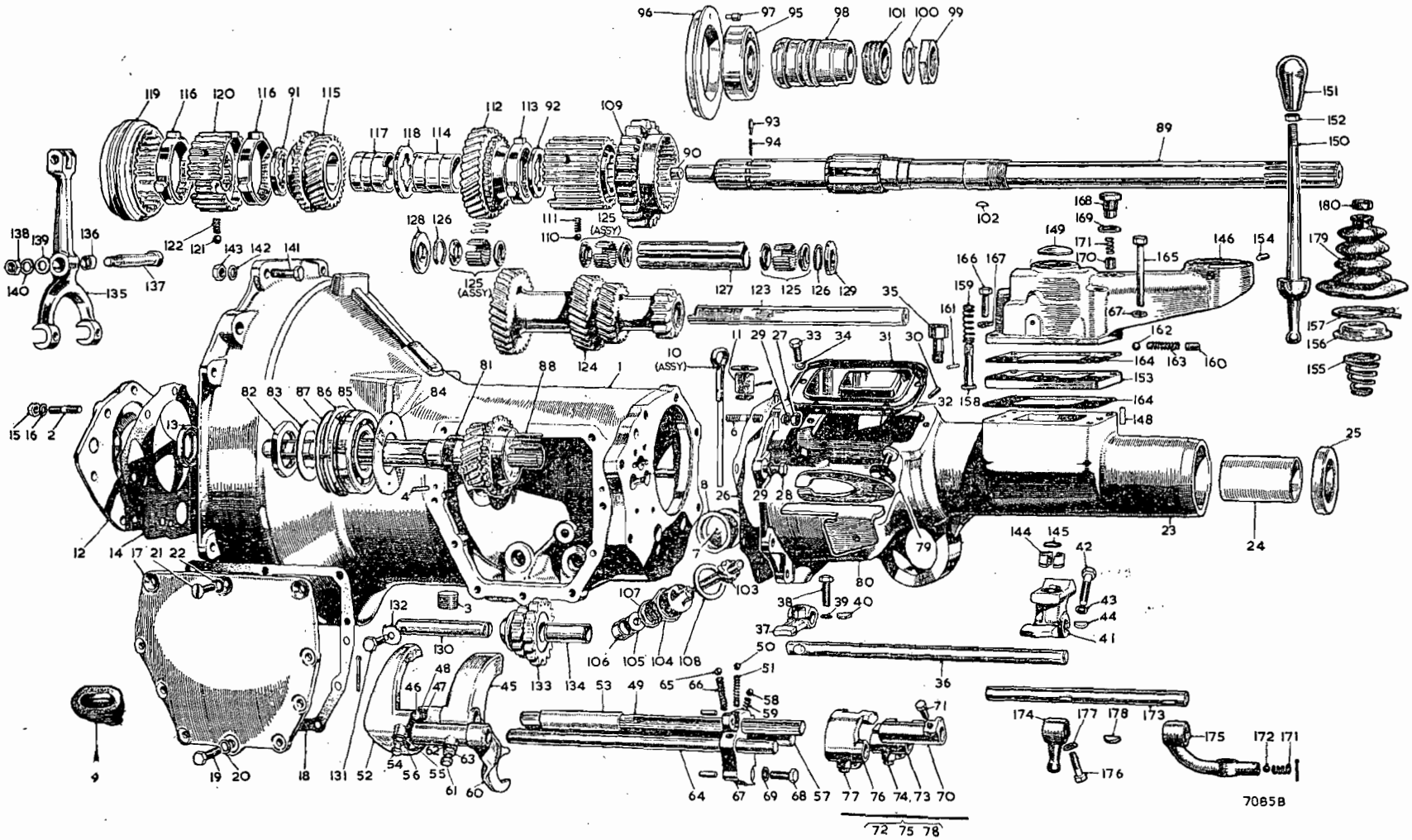

To face page F.2

Item No.	DESCRIPTION	Commencing (E) GB101 Part Number	Illus. No.	Qty. per Vehicle RHD	Qty. per Vehicle LHD	Unit of Issue	Type of Vehicle	MODIFICATIONS New Part Number	MODIFICATIONS Change Point	MODIFICATIONS Amdt. No.	REMARKS
	Gearbox—*continued*										
1	Cover—extension side	1G3809	F31	1	1						
2	Joint for extension side cover	1G3810	F32	1	1	12					
3	Set screw for extension side cover	HZS0405	F33	6	6						
4	Washer for set screw (spring)	LWN204	F34	6	6			LWZ304	Com. (E) GD101		
5	Breather assembly	1G3668	F35	1	1			1H3364			
6	Shaft—remote control	1G3682	F36	1	1						
7	Lever—selector—front	1G3680	F37	1	1						
8	Set screw for front lever	51K1030	F38	1	1						
9	Washer for set screw (spring)	LWN604	F39	1	1						
10	Key for selector lever	WKN404	F40	1	1						
11	Lever—selector—rear	1H3095	F41	1	1						
12	Set screw for rear lever	51K1031	F42	1	1						
13	Washer for set screw (spring)	2K5319	F43	1	1			LWZ305	Com. (G) A916		
14	Key for selector lever	WKN404	F44	1	1						
15	**Fork—1st and 2nd speed**	**1G3691**	**F45**	1	1			**11G3135**	**Com. (G) A290**		
16	Screw—fork locating	2A3141	F46	1	1						
17	Lock washer—shakeproof	LWN604	F47	1	1						
18	Nut for screw	FNN504	F48	1	1						
19	**Shaft—1st and 2nd speed fork**	**11G3079**	**F49**	1	1			**1H3134** **11G3079**	**Com. (G) A828** **Com. (G) A8011**		
20	Ball—shaft	BLS110	F50	1	1	12					
21	Spring for ball	2K4909	F51	1	1	36					
22	**Fork—3rd and 4th speed**	**1G3690**	**F52**	1	1			**1H3257**	**Com. (G) A290**		
23	Distance piece—3rd and 4th speed fork		F53	1	1			1H3258			
24	Screw—fork locating	2A3141	F54	1	1						
25	Lock washer—shakeproof	LWN604	F55	1	1						
26	Nut for screw	FNN504	F56	1	1						
27	**Shaft—3rd and 4th speed fork**	**1G3692**	**F57**	1	1			**11G3140**	**Com. (G) A290**		
28	Ball—shaft	BLS110	F58	1	1	12					
29	Spring for ball	2K4909	F59	1	1	36					
30	**Fork—reverse**	**11G3100**	**F60**	1	1			**11G3134**	**Com. (G) A290**		
31	Screw—fork locating	2A3141	F61	1	1						
32	Lock washer—shakeproof	LWN604	F62	1	1						
33	Nut for screw	FNN504	F63	1	1						
34	**Shaft—reverse fork**	**11G3080**	**F64**	1	1			**11G3137** **1H3133** **11G3137**	**Com. (G) A290** **Com. (G) A828** **Com. (G) A8011**		
35	Ball—shaft	BLS110	F65	1	1	12					
36	Spring for ball	2K4909	F66	1	1	36					
37	Block—shaft locating	1G3685	F67	1	1			11G3187	Com. (G) A916		
38	Set screw for block to casing	HNS0407	F68	2	2						
39	Washer for block screw (spring)	LWN204	F69	2	2			LWN304	Com. (E) GD101		

Item No.	DESCRIPTION	Commencing (E) GB101 Part Number	Illus. No.	Qty. per Vehicle RHD	Qty. per Vehicle LHD	Unit of Issue	Type of Vehicle	MODIFICATIONS New Part Number	MODIFICATIONS Change Point	MODIFICATIONS Amdt. No.	REMARKS
	Gearbox—*continued*										
1	**Selector—1st and 2nd gear**	**1G3686**	**F70**	1	1			**11G3132**	**Com. (G) A290**		
2	Screw for selector locating	1G3708	F71	1	1						
3	Wire for selector locking	2K7420	F72	1	1						
4	**Selector—3rd and 4th gear**	**1G3687**	**F73**	1	1			**11G3133**	**Com. (G) A290**		
5	Screw for selector locating	1G3708	F74	1	1						
6	Wire for selector locking	2K7420	F75	1	1						
7	**Selector—reverse gear**	**1G3688**	**F76**	1	1			**11G3131**	**Com. (G) A290**		
8	Screw for reverse gear selector	1G3708	F77	1	1						
9	Wire for selector locking	2K7420	F78	1	1						
10	Interlock arm complete	1H3092	F79	1	1						
11	Support plate for interlock arm	1H3093	F80	1	1						
12	**Shaft—1st motion**	**1G3611**	**F81**	1	1						
13	Nut for shaft	1G3584	F82	1	1						
14	Lock washer for nut	1A3717	F83	1	1	24					
15	Baffle—oil		F84	1	1			1H3139	Com. (G) A1861 Fin. (G) MA8010		
16	Bearing—ball—for shaft	6K885	F85	1	1			97H512	Com. (G) A1861 Fin. (G) MA8010		
								6K885	Com. (G) MA8011		
17	Spring ring for bearing	6K886	F86	1	1						
18	Shim for bearing	6K907	F87	A/R	A/R						
19	Shim for bearing	6K908		A/R	A/R						
20	Rollers—needle—for shaft	6K892	F88	18	18	36					
21	**Shaft—3rd motion**	**11G3035**	**F89**	1	1			**11G3221** **1H3277**	**Com. (G) A101** **Com. (E) GD101**		
22	Restrictor—oil	1A1964	F90	1	1						
23	Washer—thrust (·1565 to ·1575")—front	11G3127	F91	A/R	A/R						
24	Washer—thrust (·1585 to ·1595")—front	11G3128		A/R	A/R						
25	Washer—thrust (·1605 to ·1615")—front	11G3129		A/R	A/R						
26	Washer—thrust—rear	1G3492	F92	1	1						
27	Peg for thrust washer—front	1G3268	F93	1	1	12					
28	Spring for peg	2K8960	F94	1	1						
29	Bearing—rear for 3rd motion shaft	6K528	F95	1	1						
30	**Housing—bearing**	**1G3586**	**F96**	1	1						
31	Peg—locating	1G3530	F97	1	1						
32	Distance piece—speedometer gear	1G3639	F98	1	1			11G3223	Com. (G) A101		
33	Distance piece assembly—speedometer gear to rear bearing			1	1			AEH3242	Com. (E) GD101		
34	Flange—3rd motion shaft			1	1			1H3304			
35	Nut for shaft and speedometer gear	1G3613	F99	1	1			11G3225	Com. (G) A101		
								FNZ612	Com. (E) GD101		
36	Lock washer	1G3612	F100	1	1			11G3226	Com. (G) A101		
								LWZ212	Com. (E) GD101		
37	**Gear—speedometer drive**	**11G3039**	**F101**	1	1			**1H3151**	**Com. (G) A101**		
38	Key for gear	WKN304	F102	1	1						
39	Pinion for speedometer drive	11G3042	F103	1	1			1H3241	Com. (G) A5120		Always use 1H3241
40	Bush for pinion	2A3256	F104	1	1						
41	Oil seal for pinion	2A3254	F105	1	1	12					
42	Ring for oil seal retaining	2A3255	F106	1	1						
43	Joint washer for bush	11G3084	F107	1	1						
44	Joint for bush to rear cover	51K3169	F108	1	1						

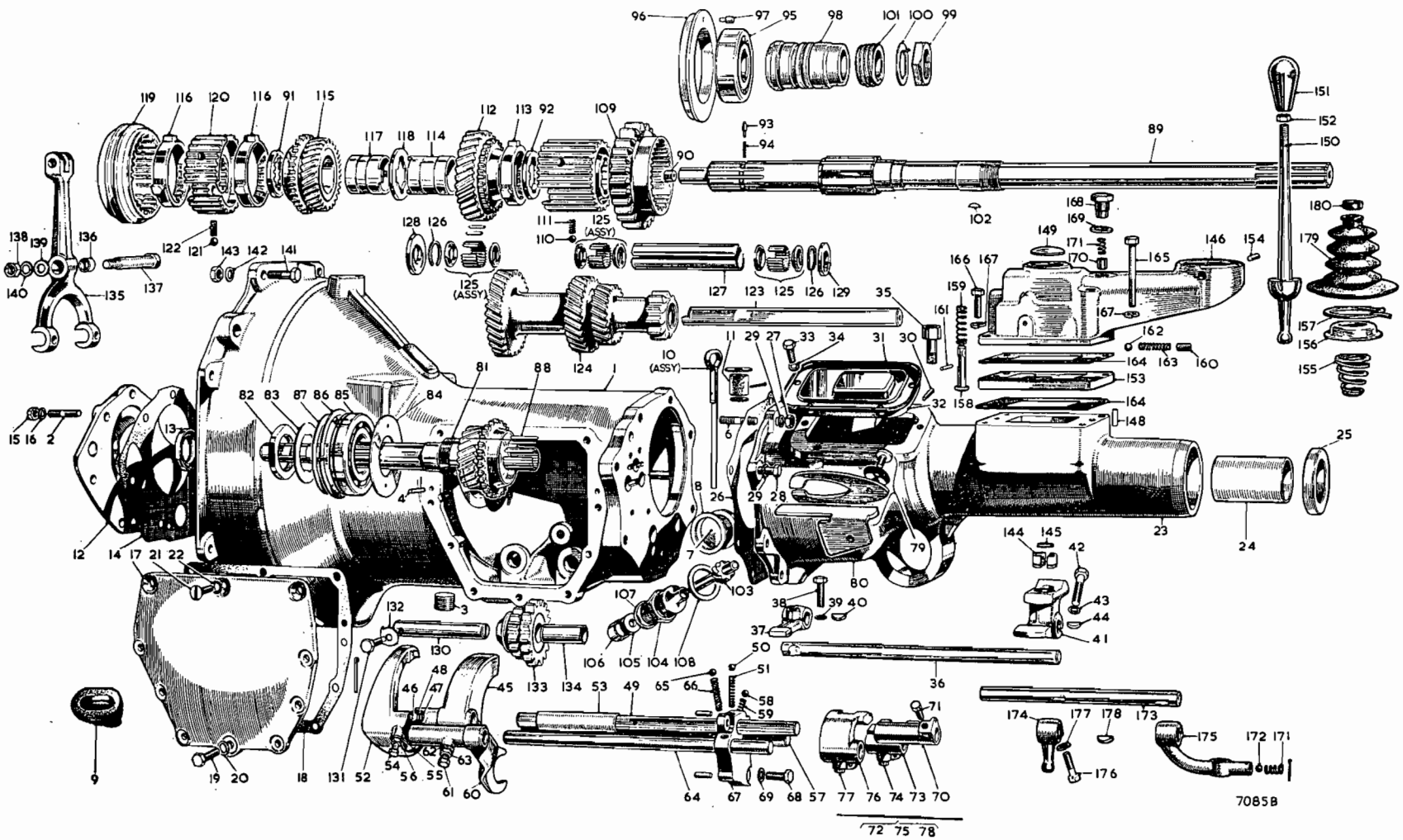

To face page F.3

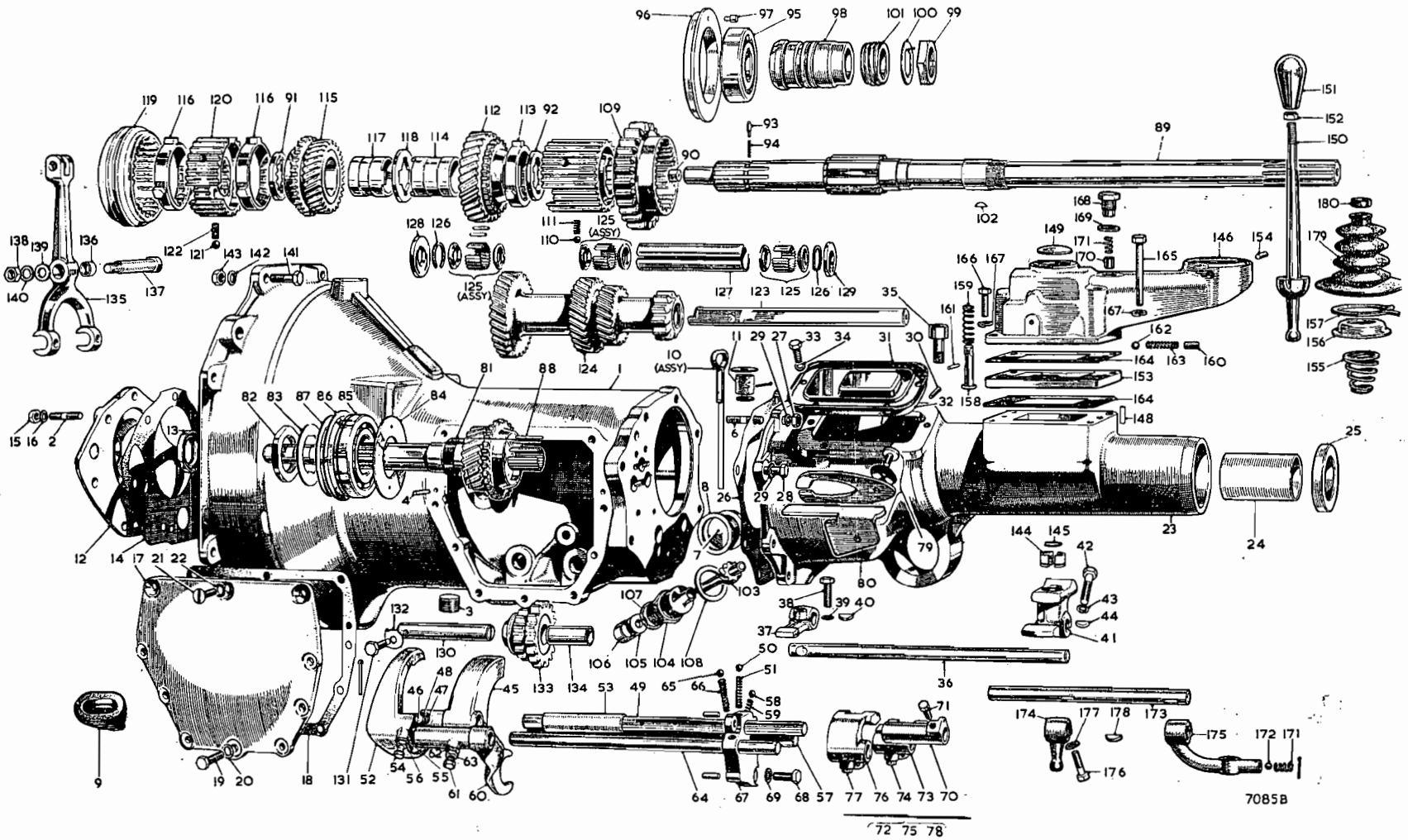

To face page F.4

Item No.	DESCRIPTION	Commencing (E) GB101 Part Number	Illus. No.	Qty. per Vehicle RHD	Qty. per Vehicle LHD	Unit of Issue	Type of Vehicle	MODIFICATIONS New Part Number	MODIFICATIONS Change Point	MODIFICATIONS Amdt. No.	REMARKS
	Gearbox—*continued*										
1	**Gear and synchronizer assembly—1st speed**	**48G137**	**F109**	1	1						
2	Ball for synchronizer	BLS109	F110	3	3	12					
3	Spring for synchronizer ball	6K884	F111	3	3						
4	**Gear—2nd speed**	**11G3064**	**F112**	1	1						
5	Baulk ring for 2nd speed gear	11G3063	F113	1	1						
6	Bush for 2nd speed gear	11G3028	F114	1	1						
7	**Gear—3rd speed**	**1G3594**	**F115**	1	1						
8	Baulk ring for 3rd and 4th gear	11G3022	F116	2	2						
9	Bush for 3rd speed gear	11G3029	F117	1	1						
10	Ring—interlocking—2nd and 3rd bushes	1G3331	F118	1	1						
11	Coupling—sliding—3rd and 4th speed	1G3598	F119	1	1						
12	Synchronizer for 3rd and 4th speed	1G3597	F120	1	1						
13	Ball for synchronizer	BLS109	F121	3	3	12					
14	Spring for synchronizer ball	6K884	F122	3	3						
15	**Layshaft**	**11G3030**	**F123**	1	1				**Fin. (E) GB51767**		**Alternatives**
16	**Layshaft**	**11G3123**		1	1			**1H3305**	**Com. (E) GD101**		**Alternatives**
17	Gear unit for layshaft	11G3024	F124	1	1						
18	Bearing—needle-roller—for layshaft	3H2865	F125	3	3						
19	Spring ring for needle rollers	11G3027	F126	4	4						
20	Distance piece for bearing	11G3026	F127	1	1						
21	Washer—thrust—front	1G3576	F128	A/R	A/R						
22	Washer—thrust—rear	1G3577	F129	A/R	A/R						
23	Washer—thrust—rear	1G3578		A/R	A/R						
24	Washer—thrust—rear	1G3579		A/R	A/R						
25	Washer—thrust—rear	1G3580		A/R	A/R						
26	**Shaft—reverse**	**11G3093**	**F130**	1	1						**Alternatives**
27	**Shaft—reverse**	**11G3124**		1	1						**Alternatives**
28	Washer (spring)	LWZ305		6	6						
29	Screw—locking—for shaft	1G3581	F131	1	1						
30	Lock washer for screw	1B3363	F132	1	1						
31	**Gear—reverse**	**11G3090**	**F133**	1	1						
32	Bush	11G3092	F134	1	1						
33	**Lever assembly—clutch withdrawal**	**1G3653**	**F135**	1	1			**11G3193**			
34	Bush for lever	1G3582	F136	1	1			11G3195			
35	Bolt for lever	11G3145	F137	1	1			11G3196	Com. (E) 4525		
36	Locknut for bolt	FNZ206	F138	1	1			LNZ206			
37	Washer for locknut		F139	1	1			11G3199			
38	Washer for locknut (spring)	2K5863	F140	1	1	144					
39	Bolt for gearbox to mounting plate	HBZ0510	F141	6	6						
40	Washer for bolt (spring)	LWZ105	F142	6	6	24					
41	Nuts for mounting plate bolts	FNZ505	F143	6	6						
42	Bush for rear selector lever	1G3704	F144	1	1						
43	Circlip for lever bush	1G3709	F145	1	1						

Item No.	DESCRIPTION	Commencing (E) GB101 Part Number	Illus. No.	Qty. per Vehicle RHD	Qty. per Vehicle LHD	Unit of Issue	Type of Vehicle	MODIFICATIONS New Part Number	MODIFICATIONS Change Point	MODIFICATIONS Amdt. No.	REMARKS
	Gearbox—*continued*										
1	Remote control	AEG3001		1	1						
2	**Tower—remote control**	**AEG3117**	**F146**	1	1						
3	Bush for remote control tower	AEG3119		1	1						
4	Dowel for remote control tower	AEG3101	F148	2	2						
5	Core plug for tower	CA1056	F149	1	1						
6	Lever—change speed	AEG3112	F150	1	1						
7	Knob for change speed lever	1G3706	F151	1	1						
8	Locknut for change speed lever knob	FNP205	F152	1	1						
9	Stop plate	AEG3118	F153	1	1						
10	Snug for change speed ball	AEG3106	F154	2	2						
11	Spring for change speed lever	AEG3105	F155	1	1						
12	Cover for ball spring	1G3927	F156	1	1						
13	Circlip for ball spring cover	1H3087	F157	1	1						
14	Plunger for reverse selector	AEG3120	F158	1	1						
15	Spring for reverse plunger	1G3863	F159	1	1						
16	Plug for reverse plunger	2K6534	F160	1	1						
17	Dowel for reverse plunger	1G3713	F161	1	1						
18	Ball for reverse plunger	BLS110	F162	1	1	12					
19	Spring for reverse plunger detent	2K4909	F163	1	1	36					
20	Joint for control tower	1G3711	F164	2	2	12					
21	Bolt for tower (long)	HBN0509	F165	2	2			NCS0509	] Com. (G) A9864		
22	Bolt for tower (short)	HBN0522	F166	2	2			HCN0522	]		
23	Washer for bolts (spring)	2K5319	F167	4	4						
24	Plug for ball retaining—box cover	AEG3113	F168	1	1						
25	Washer for plug	AEG3122	F169	1	1						
26	Plunger	AEG3124	F170	1	1						
27	Spring for plunger	AEG3123	F171	2	2						
28	Ball for selector lever	BLS108	F172	1	1	144					
29	Shaft—remote control	AEG3114	F173	1	1						
30	Lever—front—selector	AEG3115	F174	1	1						
31	Lever—rear—selector	AEG3116	F175	1	1						
32	Set screw for front and rear lever	HZS0407	F176	2	2						
33	Washer for set screw (spring)	LWZ204	F177	2	2						
34	Key for remote control shaft	JA5732	F178	2	2						
35	**Draught excluder for gear lever (rubber)**	**14A1468**	**F179**	1	1						
36	Ring for draught excluder to lever	AHH5388	F180	1	1						

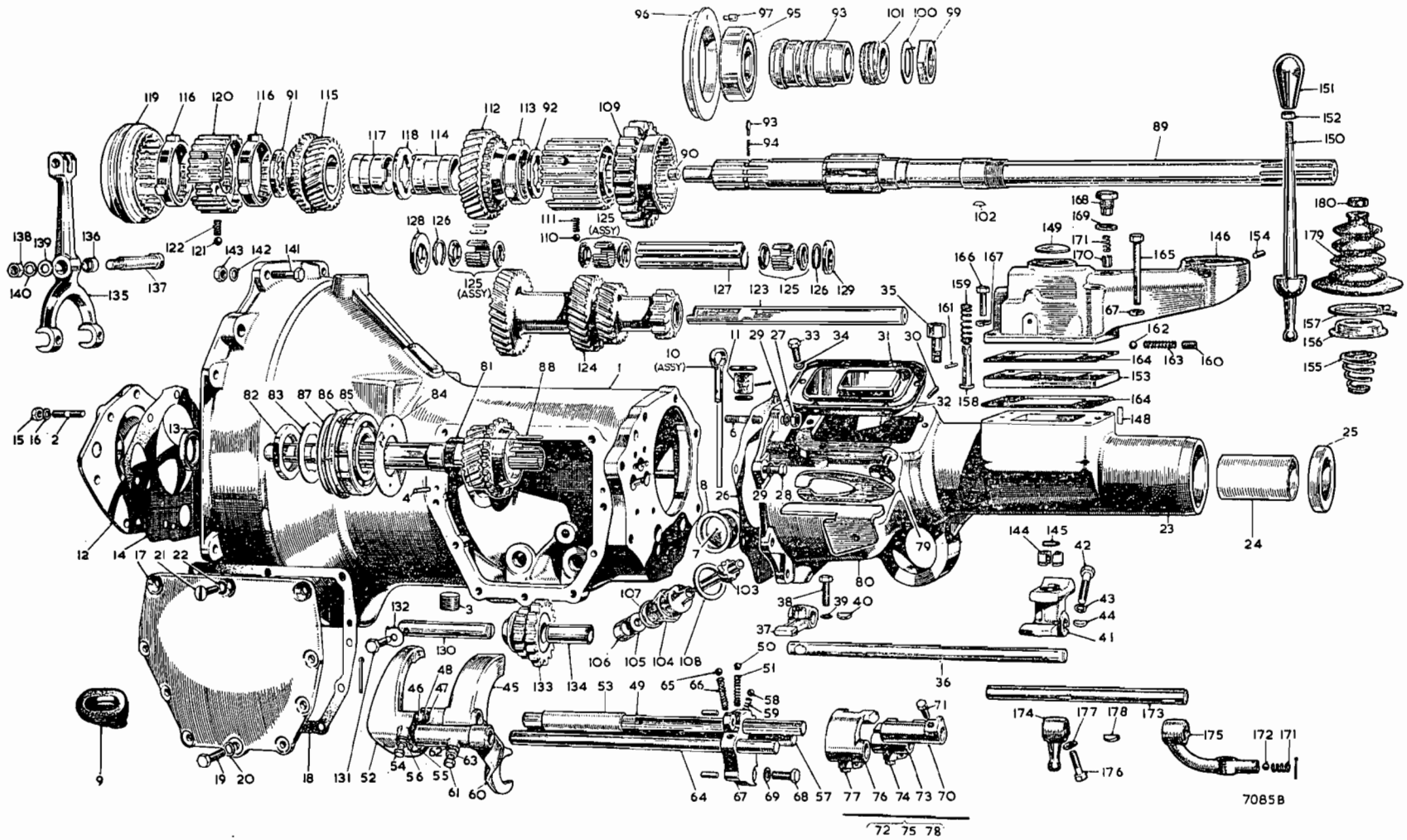

To face page F.5

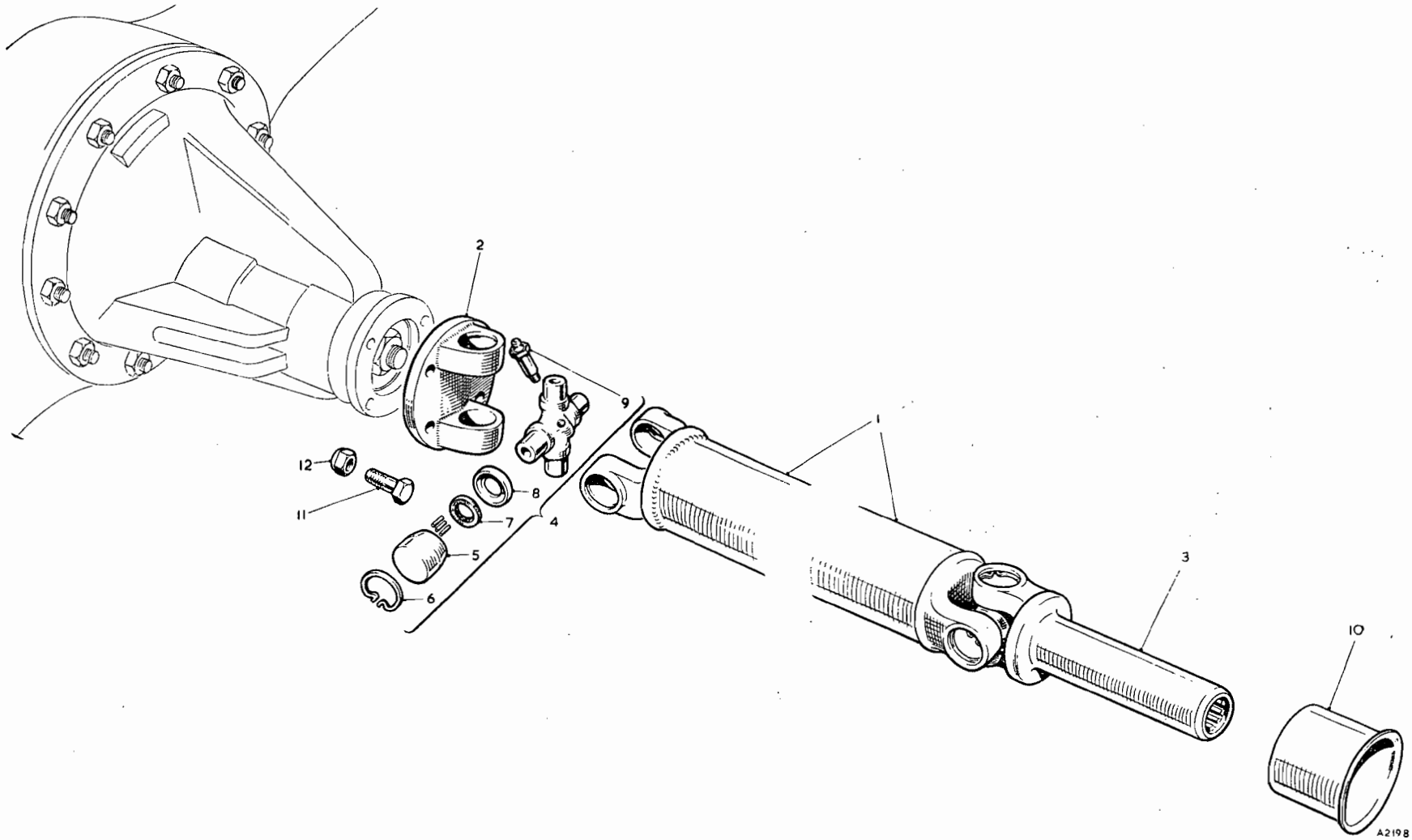

To face page G.1

Item No.	DESCRIPTION	Commencing (C) 10101 Part Number	Illus. No.	Qty. per Vehicle RHD	Qty. per Vehicle LHD	Unit of Issue	Type of Vehicle	MODIFICATIONS New Part Number	MODIFICATIONS Change Point	MODIFICATIONS Amdt. No.	REMARKS
	TRANSMISSION										
	PROPELLER SHAFT										
1	**Shaft assembly—propeller**	**AHH5069**		1	1			**AHH5568**	**Com. (C) 20753**		
								AHH5730	**Com. ***		
2	Tubular shaft assembly	AJH5170	G1	1	1			17H3908	Com. (C) 20753		
								17H3928	Com. *		
3	Yoke—flange	7H3863	G2	1	1						
4	Yoke—sleeve assembly	17H3806	G3	1	1			17H3868	Com. (C) 20753		
								7H3865			
5	Lubricator			1	1			UHN400			
6	Cap—dust			1	1			7H3878	Com. *		
7	Washer (steel)			1	1			7H3879			
8	Washer (cork)			1	1			7H3880			
9	**Journal assembly with lubricator**	**8G3000**	**G4**	2	2			**8G8183**	**Com. ***		
10	Bearing assembly—needle	7H3874	G5	8	8			17H3955			
11	Circlip—bearing	7H3877	G6	8	8						
12	Gasket	17H3818	G7	8	8						
13	Retainer—gasket	17H3819	G8	8	8						
14	Lubricator—journal	7H3858	G9	2	2						
15	Cover—dust		G10	1	1			1G7593	Com. (C) 20753 Fin. *		
16	Bolt—shaft to flange	185393	G11	4/8	4/8						Quantity increased *
17	Nut for bolt	LNZ105	G12	4/8	4/8						
18	Washer for front bolt (plain)			4	4			PWZ205	Com. *		

* (C) 61037 to 61039, 61100, 61141, 61254 to 61265, 61317 to 61332, 61372 to 61379, 61428, 61430 to 61442, 61452 to 61478, 61480 to 61481, 61484 to 61485, 61487 to 61496, 61504 on

Item No.	DESCRIPTION	Commencing (C) 10101		Qty. per Vehicle		Unit of Issue	Type of Vehicle	MODIFICATIONS			REMARKS
		Part Number	Illus. No.	RHD	LHD			New Part Number	Change Point	Amdt. No.	
	REAR AXLE AND SUSPENSION										
	REAR AXLE										
1	**Rear axle assembly**	**N.S.P.**		1	1						
2	**Case assembly**	**ATB7224**	**H1**	1	1						**Disc wheels only; prior to (C) 10917 supply also 2 off 1G7584 washer**
3	**Case assembly**	**ATB7199**		1	1			**ATB7225**	**Com. (C) 11450**		**Wire wheels only**
4	Bolts for differential carrier	2A7226	H2	10	10						
5	Locknut (R.H.T.)	1G7448	H3	2/1	2/1						Quantity reduced at (C) 10917 (disc wheels), (C) 11450 (wire wheels)
6	Locknut (L.H.T.)			1	1			1G7582	Com. (C) 10917 (disc wheels), (C) 11450 (wire wheels)		
7	Washer for locknut (tab)	1G7305	H4	2	2	12		1G7584			
8	Breather assembly	1G3668	H5	1	1						
9	Plug—oil—drain and filler	6K499	H6	2	2						
10	Nuts for differential carrier bolts	FNZ105	H7	10	10						
11	Joint for carrier to case	1G7465	H8	1	1	12					
12	Washers for differential carrier bolts (spring)	LWZ205	H9	10	10	24					
13	**Carrier and differential assembly**	**ATB7189**		1	1						
14	**Carrier**	**ATB7181**	**H10**	1	1						
15	Stud	51K886	H11	4	4						
16	Nut	FNZ107	H12	4	4						
17	Washer (plain)	ATC7084	H13	4	4						
18	Washer (spring)	LWN107	H14	4	4						
19	Cage—differential	ATB7062	H15	1	1						
20	Wheel—differential	ATB7122	H16	2	2						
21	Pinion—differential	ATB7123	H17	2	2						
22	Pin for pinion	1G7444	H18	1	1						
23	Peg for pin locating	6K842	H19	1	1						
24	Washer—thrust—for pinion	1G7445	H20	2	2						
25	Washer—thrust—for wheel	ATB7072	H21	2	2						
26	Bearing—differential	2K8938	H22	2	2						
27	Washer—packing—for bearing (·002″)	2K7993	H23	A/R	A/R						
28	Washer—packing—for bearing (·003″)	ATB7239		A/R	A/R						
29	Washer—packing—for bearing (·004″)	2K7435		A/R	A/R						
30	Washer—packing—for bearing (·006″)	6K503		A/R	A/R						
31	**Crown wheel and bevel pinion—10/43**	**ATB7156**	**H24**	1	1	**pr.**					
32	Bolt for crown wheel to cage	ATA7043	H25	8	8						
33	Washer—lock—for crown wheel bolt	6K875	H26	4	4						
34	Bearing for bevel pinion—rear	6K287	H27	1	1						
35	Bearing for bevel pinion—front	2A7213	H28	1	1						
36	Spacer for bearing	1B7240	H29	1	1						
37	Oil seal for bearing—front	ATA7047	H30	1	1	6					
38	Dust cover for oil seal	1G7439	H31	1	1						

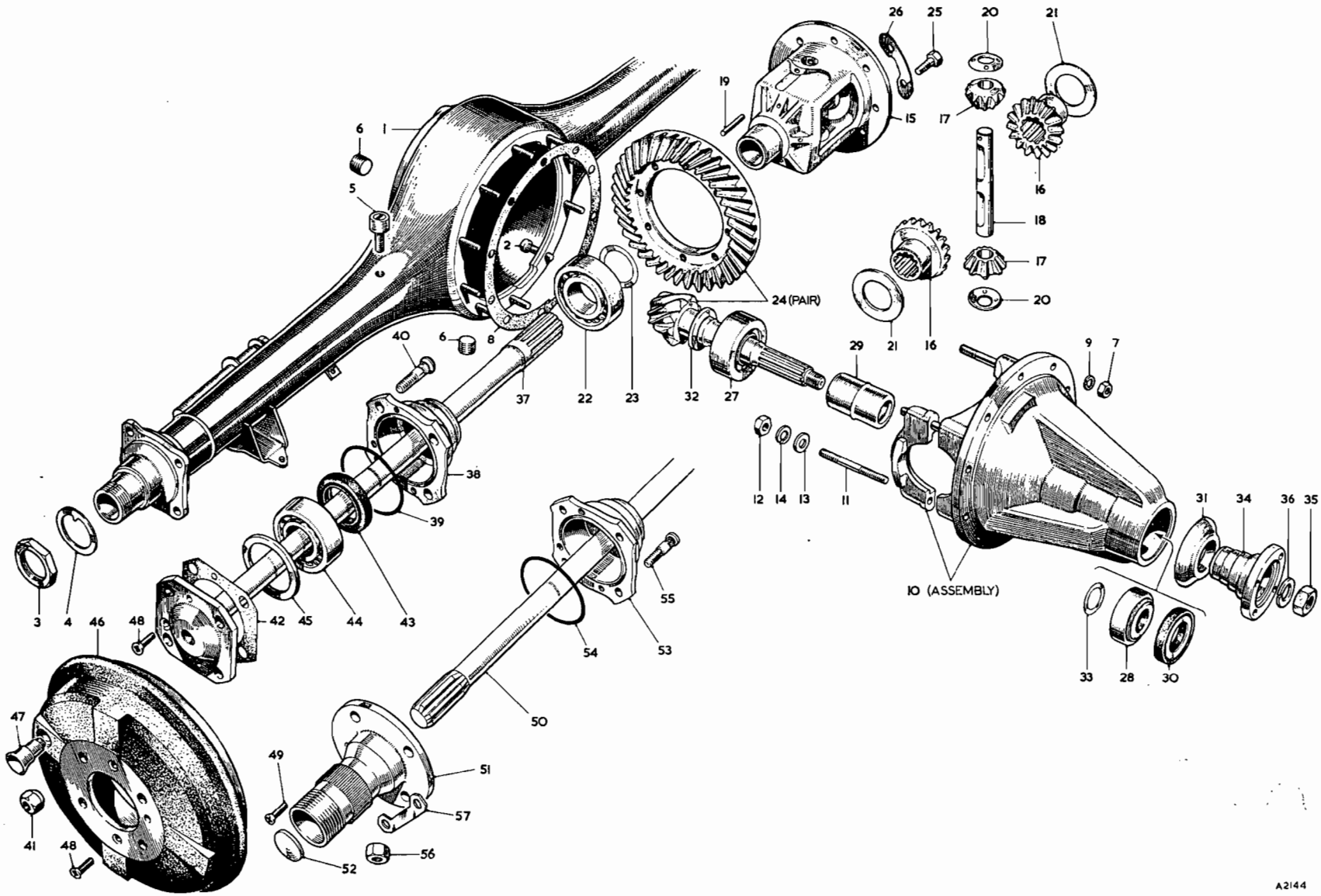
26
25
20
21
19
15
17
16
18
17
20
6
1
5
2
24 (PAIR)
21
16
40
6
8
29
9
7
37
22
23
32
27
38
12
14
13
11
31
34
36
35
39
10 (ASSEMBLY)
3
4
46
48
42
45
44
43
55
54
53
33
28
30
47
50
49
51
57
41
48
56
52
A2144

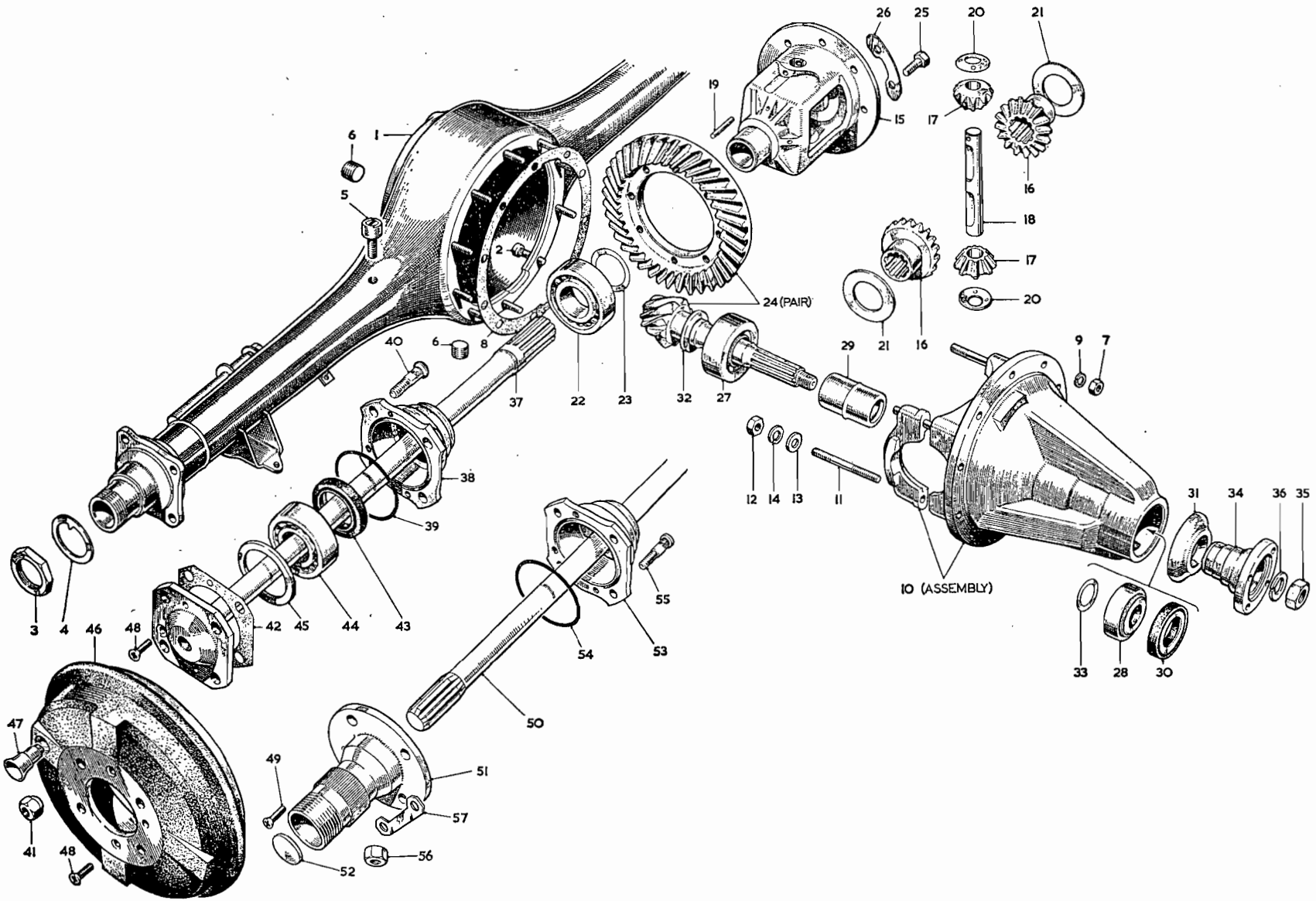

To face page H.2

Item No.	DESCRIPTION	Commencing (C) 10101 Part Number	Illus. No.	Qty. per Vehicle RHD	Qty. per Vehicle LHD	Unit of Issue	Type of Vehicle	MODIFICATIONS New Part Number	MODIFICATIONS Change Point	MODIFICATIONS Amdt. No.	REMARKS
	Rear Axle—*continued*										
1	Washer for bevel pinion (·112″)	ATB7071	H32	A/R	A/R						
2	Washer for bevel pinion (·114″)	ATB7070		A/R	A/R						
3	Washer for bevel pinion (·116″)	ATB7069		A/R	A/R						
4	Washer for bevel pinion (·118″)	ATB7068		A/R	A/R						
5	Washer for bevel pinion (·120″)	ATB7067		A/R	A/R						
6	Washer for bevel pinion (·122″)	ATB7066		A/R	A/R						
7	Washer for bevel pinion (·124″)	ATB7065		A/R	A/R						
8	Washer for bevel pinion (·126″)	ATB7064		A/R	A/R						
9	Shim for front bevel pinion bearing (·004″)	ATB7102	H33	A/R	A/R						
10	Shim for front bevel pinion bearing (·006″)	ATB7103		A/R	A/R						
11	Shim for front bevel pinion bearing (·008″)	ATB7104		A/R	A/R						
12	Shim for front bevel pinion bearing (·010″)	ATB7105		A/R	A/R						
13	Shim for front bevel pinion bearing (·012″)	ATB7106		A/R	A/R						
14	Shim for front bevel pinion bearing (·020″)	ATB7107		A/R	A/R						
15	Shim for front bevel pinion bearing (·030″)	ATB7108		A/R	A/R						
16	Flange for universal joint	ATB7059	H34	1	1						
17	Nut for flange	FNZ612	H35	1	1						
18	Washer for flange nut (spring)	LWZ212	H36	1	1						
19	**Shaft—rear axle**	**ATB7190**	**H37**	**2**	**2**						
20	**Hub assembly—rear**	**1G7433**	**H38**	**2**	**2**						
21	Seal—oil	ATB7229	H39	2	2	12					Disc wheels only
22	Stud for wheel	1G7435	H40	8	8						
23	Nut for wheel stud	ATB7074	H41	8	8						
24	Joint for shaft to hub housing	ATB7355	H42	2	2	12					
25	Seal—oil—for rear hub	8G555	H43	2	2	12					
26	Bearing for rear hub	2K7477	H44	2	2						
27	Spacer for bearing	1G7436	H45	2	2						Disc wheels only

Item No.	DESCRIPTION	Commencing (C) 10101 Part Number	Illus. No.	Qty. per Vehicle RHD	Qty. per Vehicle LHD	Unit of Issue	Type of Vehicle	MODIFICATIONS New Part Number	MODIFICATIONS Change Point	MODIFICATIONS Amdt. No.	REMARKS
	Rear Axle—*continued*										
1	**Drum—brake**	**ATB7075**	**H46**	2	2						
2	Plug for brake-drum (large)	ACH5703	H47	2	2						Disc wheels only
3	Plug for brake-drum (small)	ACH5704		2	2						Disc wheels only
4	Screw—hub to axle shaft	CMZ0410	H48	6	6						Disc wheels only
5	Plug for brake-drum (large)	140677		A/R	A/R						Wire wheels only
6	Plug for brake-drum (small)	AHH5514		A/R	A/R						Wire wheels only
7	Screw—extension to hub	CMZ0410	H49	2	2						Wire wheels only
8	**Shaft—axle**	**ATB7206**	**H50**	2	2						Wire wheels only
9	Extension—rear hub—R/H	ATB7204	H51	1	1						Wire wheels only
10	Extension—rear hub—L/H	ATB7205		1	1						Wire wheels only
11	Plug for hub extension (welch)	2K8160	H52	2	2						Wire wheels only
12	**Hub assembly—rear**	**ATB7208**	**H53**	2	2						Wire wheels only
13	Seal—oil	ATB7229	H54	2	2	12					Wire wheels only
14	Bolt—hub to drum	ATB7201	H55	8	8						Wire wheels only
15	Nut—drum retaining	FNZ507	H56	8	8						Wire wheels only
16	Washer—drum retaining (tab)	ATB7209	H57	4	4						Wire wheels only

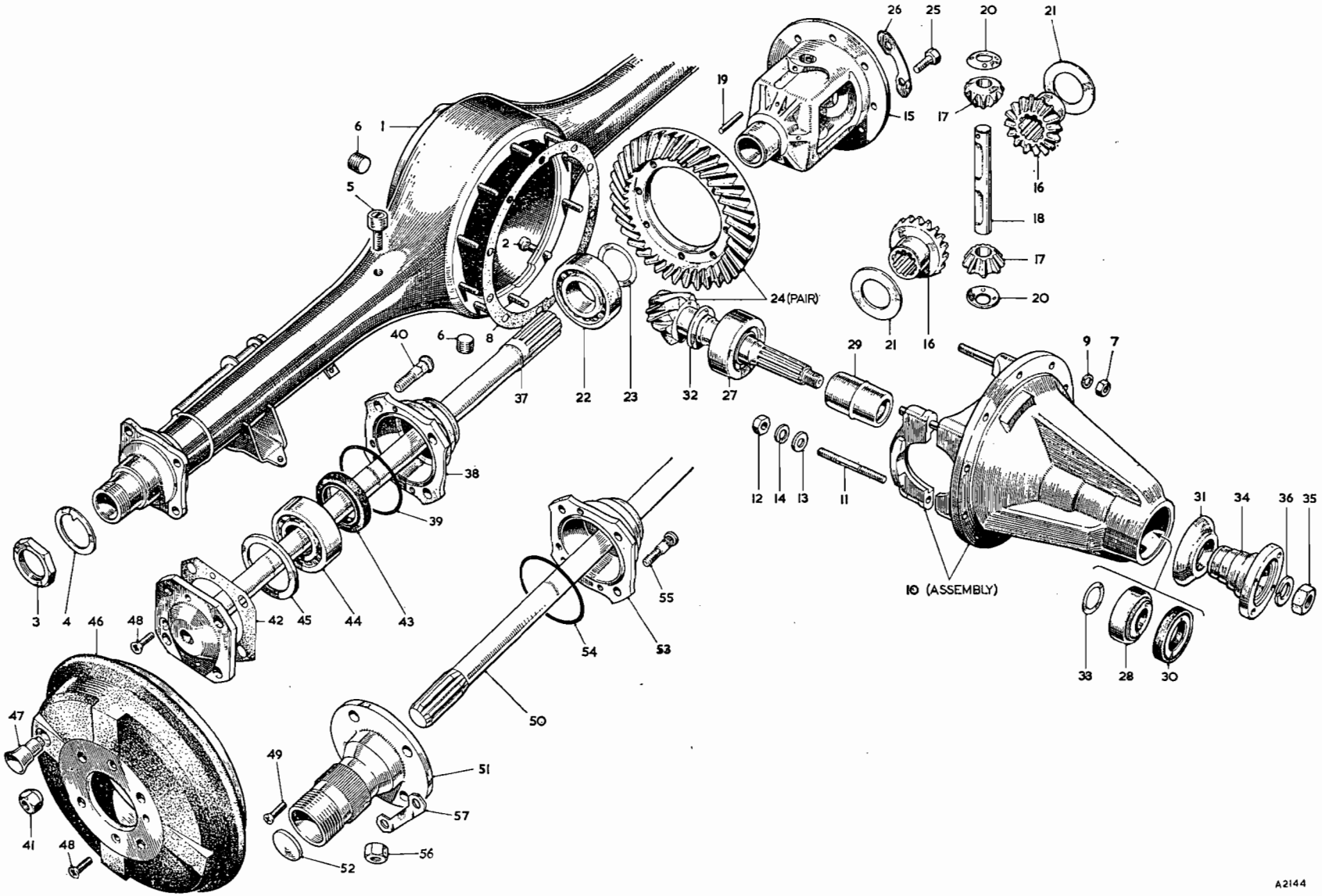

To face page H.3

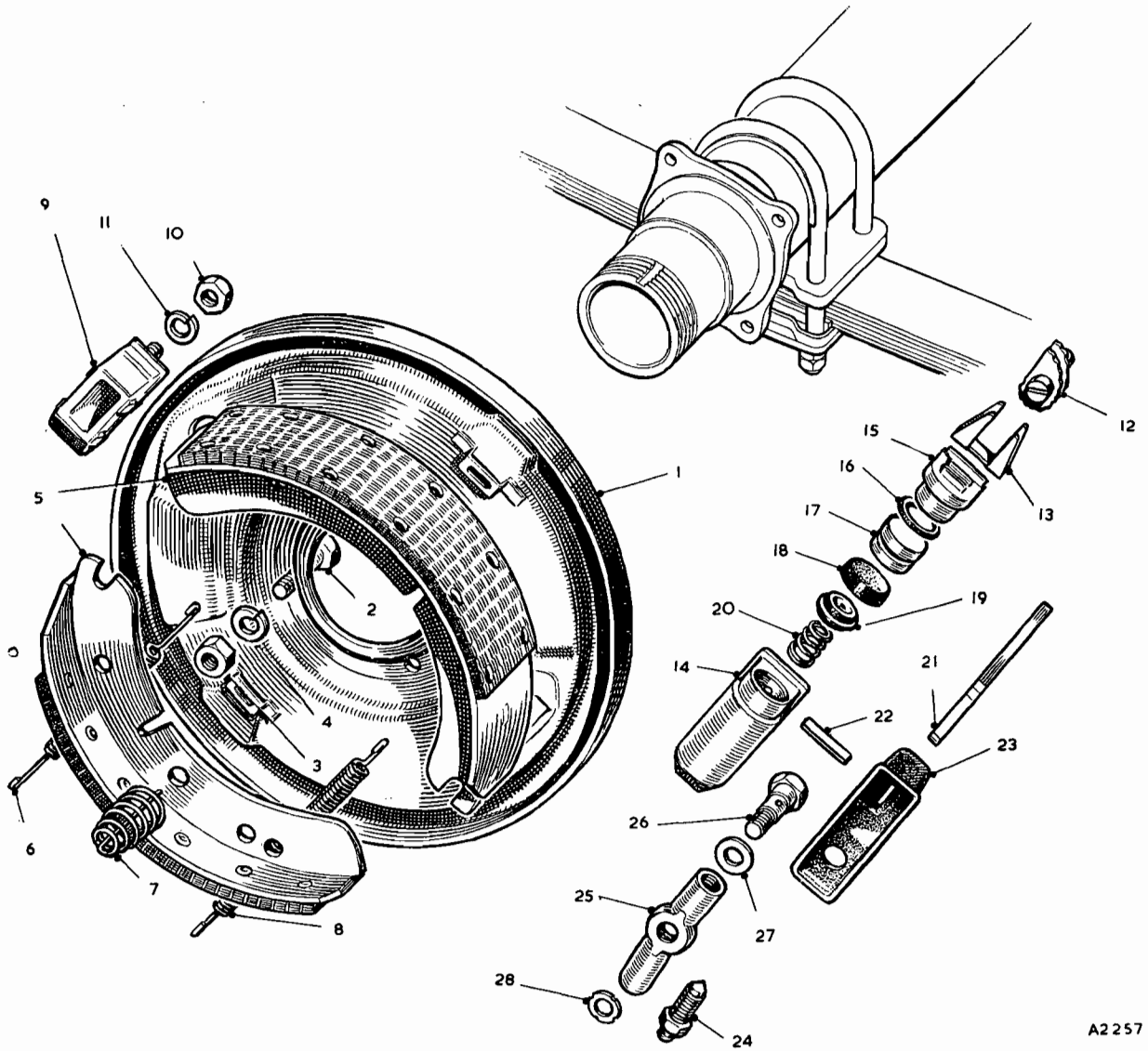

To face page H.4

Item No.	DESCRIPTION	Commencing (C) 10101 Part Number	Illus. No.	Qty. per Vehicle RHD	Qty. per Vehicle LHD	Unit of Issue	Type of Vehicle	MODIFICATIONS New Part Number	MODIFICATIONS Change Point	MODIFICATIONS Amdt. No.	REMARKS
	BRAKES										
1	**Plate—brake—R/H—rear**	**ATB7078**		**1**	**1**						
2	**Plate—brake—L/H—rear**	**ATB7079**	**HA1**	**1**	**1**						
3	Bolt—brake-plate to axle case	51K1380	HA2	8	8						
4	Nut for bolt	FNZ106	HA3	8	8						
5	Washer for nut (spring)	LWZ206	HA4	8	8						
6	**Shoe assembly—brake**	**8G8025**	**HA5**	**2 sets**	**2 sets**	**1**					
7	Lining with rivets	AJH5172		1 set	1 set	1					
8	Spring—brake-shoe pull-off	7H7936	HA6	2	2						
9	Spring—brake-shoe steady	301020	HA7	4	4	12					
10	Spring—brake-shoe tension	7H7935	HA8	2	2						
11	Abutment strip for brake-shoe	7H7932	HA9	2	2						
12	Nut for abutment strip	7H7355	HA10	4	4						
13	Washer for nut (spring)	7H7368	HA11	4	4						
14	Adjuster	7H7931	HA12	2	2						
15	Mask—adjuster	7H7930	HA13	2	2						
16	**Cylinder assembly—wheel**	**27H7394**		**2**	**2**						
17	Body (with abutment strip)	7H7942	HA14	1	1						
18	Piston (with dust cover)	7H7973	HA15	1	1						
19	Seal	17H7707	HA16	1	1						
20	Piston—hydraulic	7H7928	HA17	1	1						
21	Cup—piston	7H7923	HA18	1	1	12					
22	Filler—cup	7H7940	HA19	1	1						
23	Spring—filler cup	7H7939	HA20	1	1						
24	Lever—hand brake	27H7395	HA21	1	1						
25	Pin—lever	17H7203	HA22	1	1						
26	Boot for wheel cylinder	7H7943	HA23	2	2						
27	Screw—bleeder	3H2428	HA24	2	2						
28	Banjo connection	27H7164	HA25	2	2			AHH5634	Com. (C) 27989 (disc wheels), (C) 28540 (wire wheels)		
29	Bolt for banjo connection	7H7847	HA26	2	2						
30	Joint for banjo connection (large)	3H550	HA27	2	2						
31	Joint for banjo connection (small)	3H2287	HA28	2	2						

Item No.	DESCRIPTION	Commencing (C) 10101 Part Number	Illus. No.	Qty. per Vehicle RHD	Qty. per Vehicle LHD	Unit of Issue	Type of Vehicle	MODIFICATIONS New Part Number	MODIFICATIONS Change Point	MODIFICATIONS Amdt. No.	REMARKS
	REAR SPRING										
1	**Spring assembly—rear**	**AHH5461**		2	2						
2	**Leaf—main**	**AHH5462**	**HB1**	2	2						
3	Bush	AHH5015	HB2	2	2						
4	Leaf—second	AHH5464	HB3	2	2						
5	Leaf—third	N.S.P.	HB4	2	2						
6	Leaf—fourth	N.S.P.	HB5	2	2						
7	Leaf—fifth	N.S.P.	HB6	2	2						
8	Leaf—sixth	N.S.P.	HB7	2	2						
9	Bottom plate	N.S.P.	HB8	2	2						
10	Bolt—locating	AHH5042	HB9	2	2						
11	Nut for locating bolt	FNZ105	HB10	2	2						
12	Locknut for locating bolt	FNZ205	HB11	2	2						
13	Distance piece for locating bolt	ACA5000	HB12	2	2						
14	Clip—third leaf	AHH5467	HB13	4	4						
15	Clip—fourth leaf	AHH5470	HB14	4	4						
16	Shackle plate and pins	AHH5018	HB15	2	2						
17	Shackle plate—inner	AHH5019	HB16	2	2						
18	Bush for shackle plate (rubber)	AHH5016	HB17	8	8						
19	Nut for shackle plate	FNZ106	HB18	4	4						
20	Washer for shackle plate (spring)	LWZ206	HB19	4	4						
21	'U' clip for rear spring	184448	HB20	4	4						
22	Plate for top 'U' clip	AHH5082	HB21	2	2						
23	Nut for 'U' clip	FNZ106	HB22	16	16						
24	Plate—spring locating	ACG5001	HB23	4	4						
25	Pad for spring seating	ACG5002	HB24	4	4						
26	Bolt for spring front end	AHH5071	HB25	2	2						
27	Nut for front end bolt	FNZ107	HB26	2	2						
28	Washer for front end bolt (spring)	LWZ207	HB27	2	2						
29	Rebound strap	AHH5081	HB28	2	2						
30	Nut for rebound strap to axle	FNZ106	HB29	2	2						
31	Washer for rebound strap (plain)	PWZ206	HB30	2	2						
32	Washer for rebound strap (spring)	LWZ206	HB31	2	2						
33	Bump rubber	AHH5106	HB32	2	2						
34	Screw for bump rubber to frame	HZS0505	HB33	4	4						
35	Washer for bump rubber screw (spring)	LWZ205	HB34	4	4	24					
36	Bracket—shock absorber arm to rear spring—R/H	AHH5067		1	1						
37	Bracket—shock absorber arm to rear spring—L/H	AHH5068	HB35	1	1						

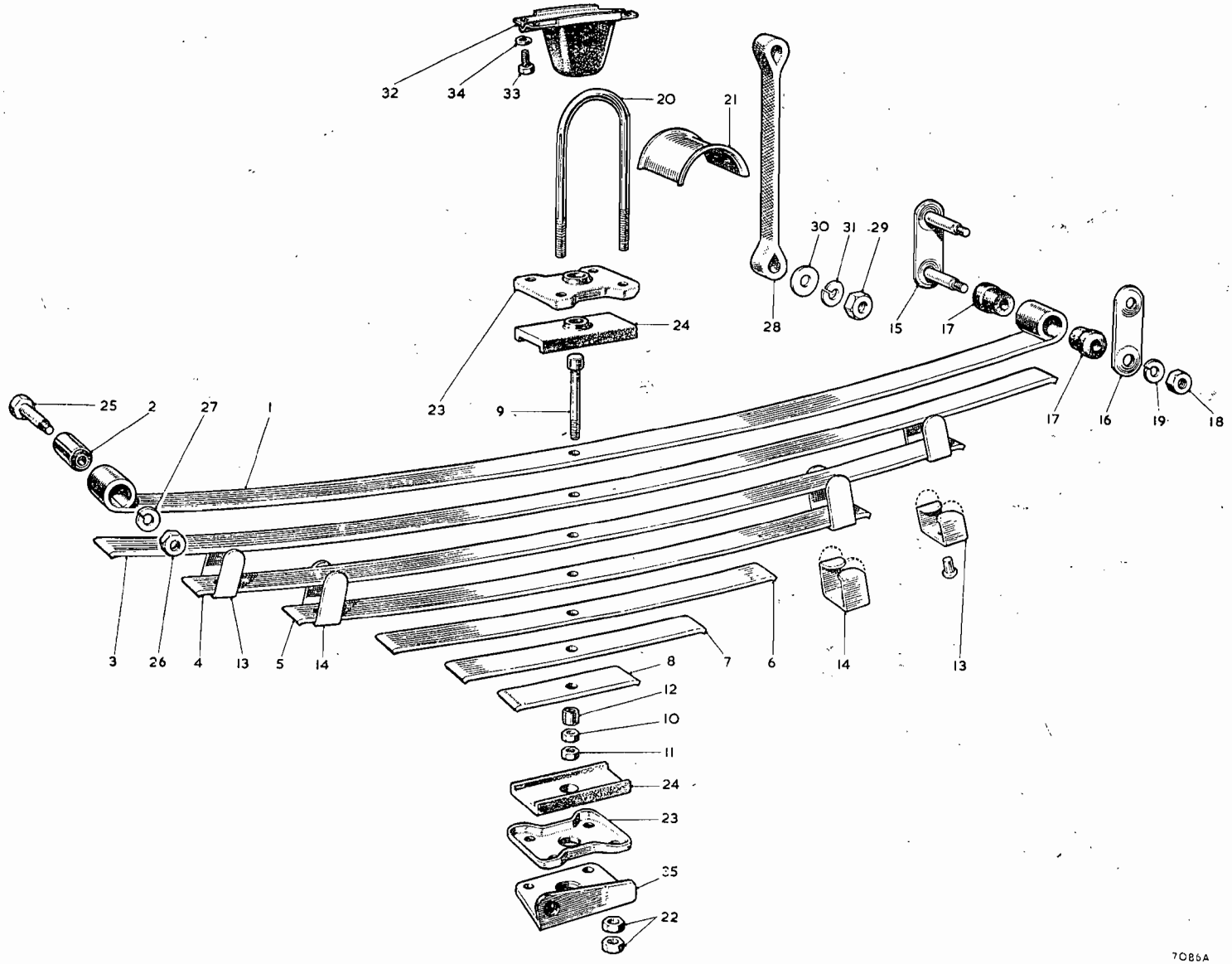

To face page H.5

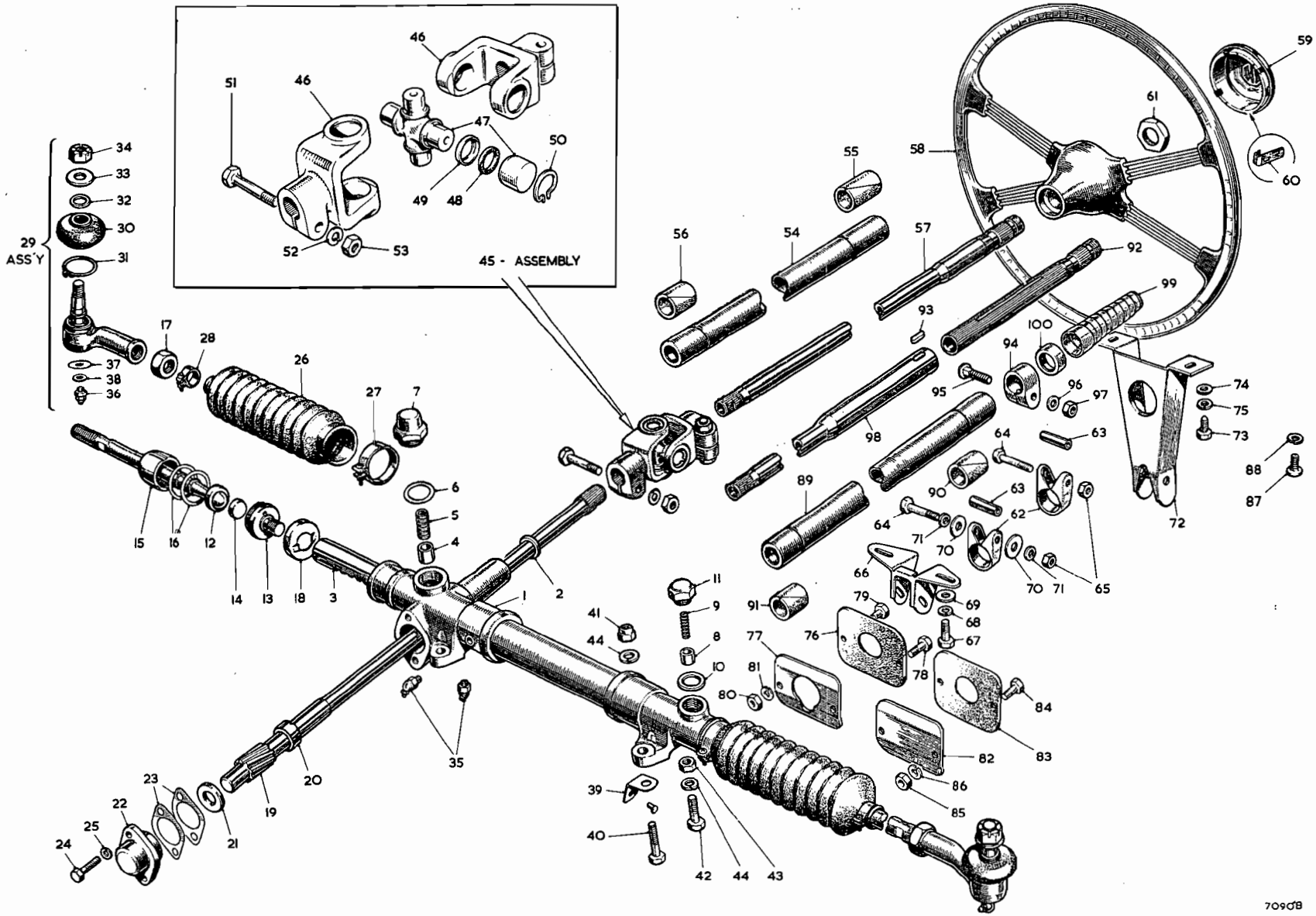

To face page J.1

STEERING

Item No.	DESCRIPTION	Commencing (C) 10101 Part Number	Illus. No.	Qty. per Vehicle RHD	Qty. per Vehicle LHD	Unit of Issue	Type of Vehicle	MODIFICATIONS New Part Number	MODIFICATIONS Change Point	MODIFICATIONS Amdt. No.	REMARKS
1	**Steering rack, pinion, and tie-rod assembly**	**AHH6001**		1							
2	**Steering rack, pinion, and tie-rod assembly**	**AHH6002**			1						
3	**Housing assembly—rack**	**AHH6013**	**J1**	1							
4	**Housing assembly—rack**	**AHH6016**			1						
5	Seal for pinion shaft	126922	J2	1	1						
6	Rack—steering	AHH6020	J3	1	1						
7	Pad for rack damper	ACA5244	J4	1	1	12					
8	Spring for rack damper	ACA5248	J5	1	1	6					
9	Shim for pad housing	ACA5249	J6	A/R	A/R						
10	Housing for rack damper	ACA5245	J7	1	1						
11	Pad for rack damper secondary	ACA5284	J8	1	1	6					
12	Spring for rack damper secondary	ACA5286	J9	1	1						
13	Washer for rack damper secondary	ACA5283	J10	1	1						
14	Housing for rack damper secondary	ACA5285	J11	1	1						
15	Rod—tie	AHH6019	J12	2	2						
16	Housing—male ball	ACA6031	J13	2	2						
17	Seat—ball	ACA5246	J14	2	2						
18	Housing—female ball	ACA5304	J15	2	2						
19	Shim for ball housing (·003″)	ACA5301	J16	A/R	A/R						
20	Shim for ball housing (·005″)	ACA5302		A/R	A/R						
21	Locknut for tie-rod	AJB6025	J17	2	2						
22	Lock washer for tie-rod	ACA5247	J18	2	2	12					
23	**Pinion—steering**	**AHH6021**	**J19**	1							
24	**Pinion—steering**	**AHH6022**			1						
25	Washer—thrust—for upper pinion	130795	J20	1	1						
26	Washer—thrust—for lower pinion	126926	J21	1	1						
27	Bearing for pinion tail	AHH6023	J22	1	1						
28	Shim for tail bearing (·005″)	126920	J23	A/R	A/R						
29	Shim for tail bearing (·007″)	126921		A/R	A/R						
30	Screw for bearing to steering-box	HZS0506	J24	2	2						
31	Washer for bearing screw (spring)	LWZ205	J25	2	2	24					
32	Seal for rack	130801	J26	2	2						
33	Clip assembly for seal (large)	ACA6030	J27	2	2						
34	Clip assembly for seal (small)	ACA5118	J28	2	2						

Item No.	DESCRIPTION	Commencing (C) 10101 Part Number	Illus. No.	Qty. per Vehicle RHD	Qty. per Vehicle LHD	Unit of Issue	Type of Vehicle	MODIFICATIONS New Part Number	MODIFICATIONS Change Point	MODIFICATIONS Amdt. No.	REMARKS
	Steering—*continued*										
1	**Socket assembly—ball**	**ACH6168**	**J29**	**2**	**2**						**Supply also 1 off ACH6170 washer, 1 off ACH6173 washer**
2	Boot (rubber)	7H3571	J30	2	2						
3	Clip for boot	7H3565	J31	2	2						
4	Ring for boot clip	ACA6004	J32	2	2						
5	Washer for ball socket	PWZ107	J33	2	2						
6	Nut for ball socket	FNZ407	J34	2	2						
7	Lubricator for rack	UHN205	J35	1	1						
8	Lubricator for pinion	UHN205	J35	1							
9	Lubricator for pinion	UHN105			1						
10	Lubricator for ball socket	UHN405	J36	2	2						
11	Washer for lubricator		J37	2	2			ACH6170	] Com. (C) 53875 (L.H.D.),		
12	Washer for lubricator (fibre)		J38	2	2	12		ACH6173	] (C) 55545 (R.H.D.)		
13	Shim for steering rack to brackets	AHH6007	J39	A/R	A/R						Maximum 6 off per car
14	Bolt for rack to bracket—front	HBZ0509	J40	2	2						
15	Nut for rack to bracket bolt (nylon)	LNZ205	J41	2	2						
16	Screw for rack to bracket—rear	HZS0508	J42	2	2						
17	Nut for rack to bracket—rear bolt	FNZ105	J43	2	2						
18	Washer for rack to bracket (spring)	LWZ205	J44	4	4	24					
19	**Universal joint—steering-column**	**AHH6000**	**J45**	**1**	**1**						
20	End yoke	17H3925	J46	2	2						
21	Spider unit assembly	17H3873	J47	1	1						
22	Joint for journal	17H3874	J48	4	4						
23	Retainer for joint	17H3875	J49	4	4						
24	Circlip	17H3811	J50	4	4						
25	Bolt for universal joint	17H3839	J51	2	2						
26	Washer for bolt	17H3841	J52	2	2						
27	Nut for bolt	17H3840	J53	2	2						
28	**Steering-column assembly**	**AHH6011**		**1**	**1**						
29	Tube—outer	AHH6025	J54	1	1						
30	Bush for upper end—felt	7H6255	J55	1	1						
31	Bush for lower end—felt	AHH6027	J56	1	1						
32	Tube assembly—inner	AHH6028	J57	1	1						

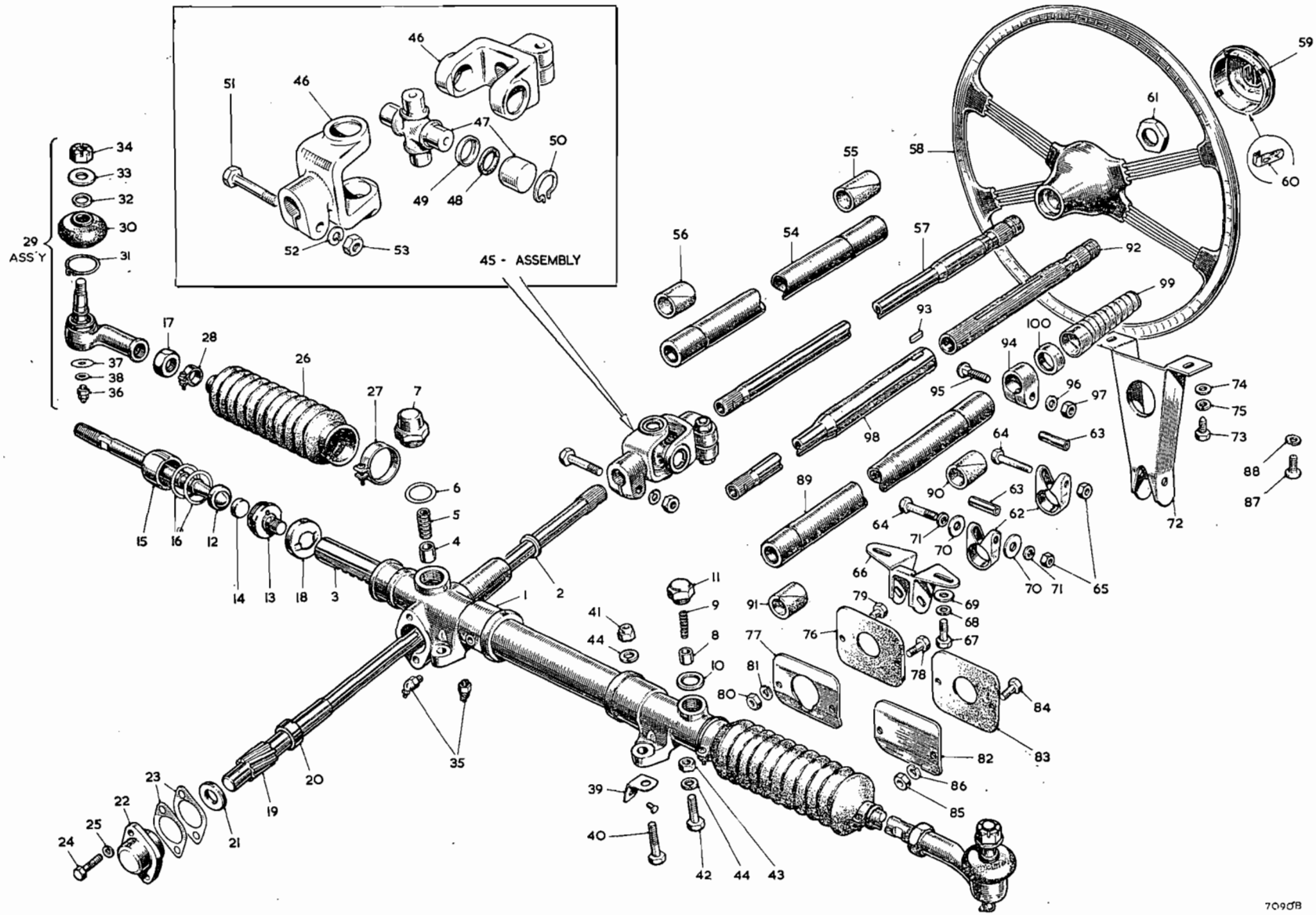

To face page J.2

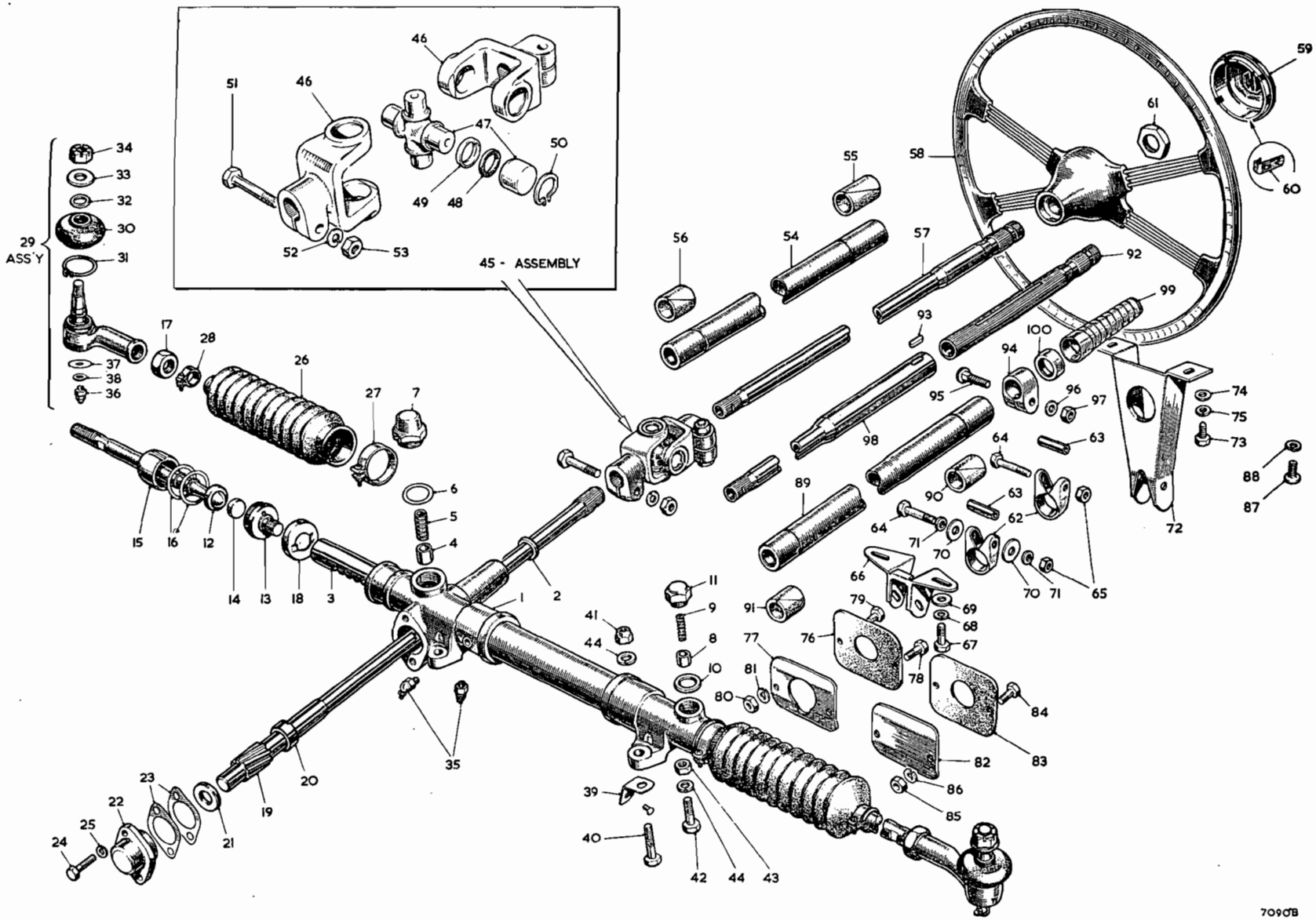

To face page J.3

Item No.	DESCRIPTION	Commencing (C) 10101 Part Number	Illus. No.	Qty. per Vehicle RHD	Qty. per Vehicle LHD	Unit of Issue	Type of Vehicle	MODIFICATIONS New Part Number	MODIFICATIONS Change Point	MODIFICATIONS Amdt. No.	REMARKS
	Steering—*continued*										
1	**Wheel—steering**	**AHH6003**	**J58**	1	1						
2	Cover for steering-wheel	AHH6004	J59	1	1						
3	Spring clip for cover	AHH6035	J60	4	4						
4	Nut for steering-wheel	ACH6001	J61	1	1						
5	Clamp for steering-column	AHH6005	J62	2	2						
6	Distance piece for clamp	AHH6006	J63	2	2						
7	Bolt for clamp	HBZ0518	J64	2	2						
8	Nut for clamp bolt	FNZ105	J65	2	2						
9	Bracket—lower—for steering-column	AHH6008	J66	1	1						
10	Screw for bracket to frame	HZS0506	J67	2	2						
11	Washer for bracket to frame bolt (spring)	LWZ205	J68	2	2	24					
12	Washer for bracket to frame bolt (plain)	PWZ205	J69	2	2						
13	Washer for lower bracket to clamp bolt (plain)	PWZ205	J70	2	2						
14	Washer for lower bracket to clamp bolt (spring)	LWZ205	J71	2	2	24					
15	Washer for lower bracket to clamp bolt (plain)	PWZ205	J70	2	2						
16	Washer for lower bracket to clamp bolt (spring)	LWZ205	J71	2	2	24					
17	Bracket—upper—for steering-column	AHH6030	J72	1	1						
18	Screw for bracket to body rail	HPZ0505	J73	2	2						
19	Washer for screw (plain)	PWZ205	J74	2	2						
20	Washer for screw (spring)	LWZ205	J75	2	2	24					
21	Seal for column (rubber)	AHH6009	J76	1	1						
22	Retainer for column seal	AHH6010	J77	1	1						
23	Screw for seal and retainer to dash	HZS0505	J78	1	1						
24	Screw for seal and retainer to dash	HZS0506	J79	1	1						
25	Nut for screws	FNZ105	J80	2	2						
26	Washer for seal and retainer screws	LWZ205	J81	2	2	24					
27	Blanking plate	AHH6024	J82	1	1						
28	Seal—blanking	AHH6009	J83	1	1						
29	Screw for blanking plate and seal	HZS0505	J84	2	2						
30	Nut for screw	FNZ105	J85	2	2						
31	Washer for blanking plate and seal screw	LWZ205	J86	2	2	24					
32	Screw for steering-column bracket blanking holes	PMZ0508	J87	2	2						
33	Washer for screw (spring)	LWZ205	J88	2	2	24					

Item No.	DESCRIPTION	Commencing (C) 10101 Part Number	Illus. No.	Qty. per Vehicle RHD	Qty. per Vehicle LHD	Unit of Issue	Type of Vehicle	MODIFICATIONS New Part Number	MODIFICATIONS Change Point	MODIFICATIONS Amdt. No.	REMARKS
	Steering—*continued*										
1	**Steering-column assembly (adjustable)**	**AHH6012**		1	1						Optional extra
2	Tube—outer	AHH6031	J89	1	1						
3	Bush (felt)—top end	AHH6032	J90	1	1						
4	Bush (felt)—lower end	AHH6027	J91	1	1						
5	Top end—adjustable	ACC6042	J92	1	1						
6	Key for top end	47330	J93	1	1						
7	Clamp collar	47327	J94	1	1						
8	Bolt for clamp collar	AJC6014	J95	1	1						
9	Washer for clamp collar bolt	47325	J96	1	1						
10	Nut	FNP205	J97	1	1						
11	Tube assembly—inner	AHH6033	J98	1	1						
12	Spring cover	130463	J99	1	1						
13	Cup for spring cover	130462	J100	1	1						

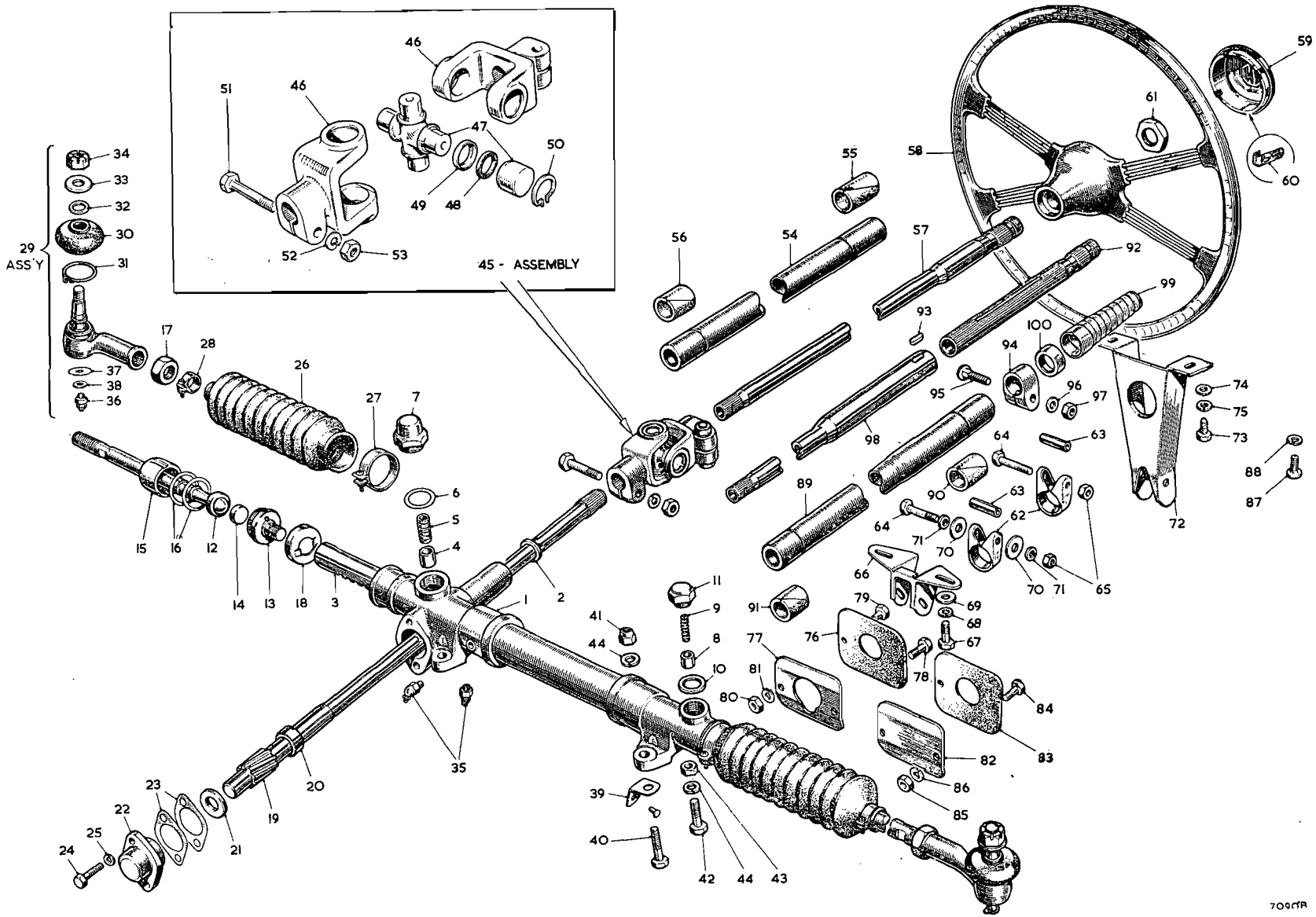

To face page J.4

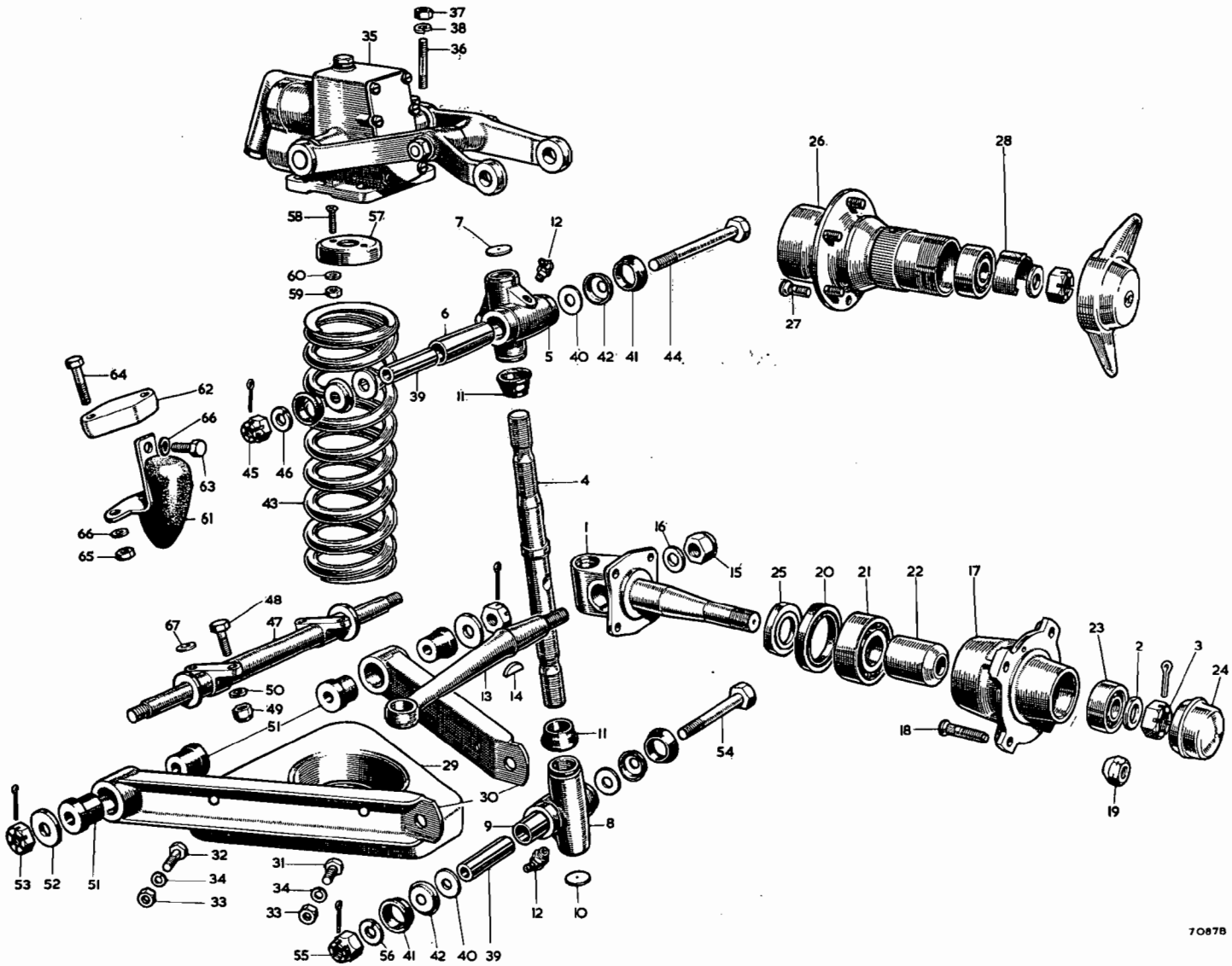
37
38
36
35
58
57
7
12
60
59
6
5
40
42
41
44
26
28
27
64
62
66
63
61
66
65
45
46
43
39
11
4
1
16
15
25
20
21
22
17
23
2
3
24
18
19
48
67
47
50
49
51
13
14
11
54
29
30
9
8
53
52
51
32
34
33
31
34
33
55
56
41
42
40
39
12
10
70878

FRONT AXLE AND SUSPENSION

Item No.	DESCRIPTION	Commencing (C) 10101 Part Number	Illus. No.	Qty. per Vehicle RHD	Qty. per Vehicle LHD	Unit of Issue	Type of Vehicle	MODIFICATIONS New Part Number	MODIFICATIONS Change Point	MODIFICATIONS Amdt. No.	REMARKS
1	**Front suspension assembly—R/H**	**N.S.P.**		1	1						
2	**Front suspension assembly—L/H**	**N.S.P.**		1	1						
3	**Steering knuckle—R/H**	**ATB4206**		1	1			**ATB4268**	**Com. (C) 54247**		
4	**Steering knuckle—L/H**	**ATB4207**	**K1**	1	1			**ATB4269**			
5	Washer—steering knuckle	ATB4069	K2	1	1						
6	Nut for steering knuckle (R.H.T.)	FNZ412		1	1						
7	Nut for steering knuckle (L.H.T.)	FNZ2412	K3	1	1						
8	**Pin—swivel—R/H**	**ATB4218**		1	1						
9	**Pin—swivel—L/H**	**ATB4219**	**K4**	1	1						
10	**Link—swivel pin—upper R/H**	**ATB4208**		1	1						
11	**Link—swivel pin—upper L/H**	**ATB4209**	**K5**	1	1						
12	Bush	ACG6005	K6	2	2						
13	Plate	ACA4010	K7	2	2						
14	**Link—swivel pin—lower—R/H**	**ATB4212**		1	1						
15	**Link—swivel pin—lower—L/H**	**ATB4213**	**K8**	1	1						
16	Bush	ACG6005	K9	2	2						
17	Plate	ACA4010	K10	2	2						
18	Seal for swivel pin	ACG4030	K11	4	4						
19	Lubricator	UHN405	K12	4	4						
20	**Lever—steering—R/H**	**ATB4186**		1	1			**ATB4260**	**Com. (C) 54247**		
21	**Lever—steering—L/H**	**ATB4187**	**K13**	1	1			**ATB4261**			
22	Key for steering lever	WKN506	K14	2	2						
23	Nut for steering lever	LNZ108	K15	2	2				Fin. (C) 54246		Alternatives
24	Nut for steering lever	LNZ208		2	2						
25	Nut for steering lever			2	2			LNZ110	Com. (C) 54247		
26	Washer for nut		K16	2	2			PWZ110			
27	**Hub assembly**	**ATB4067**	**K17**	2	2						Disc wheels
28	Stud—wheel	1G4359	K18	8	8						
29	Nut for wheel stud	ATB7074	K19	8	8	12					
30	Seal—oil	ACF4004	K20	2	2	6					
31	Bearing for hub—inner	ACF4002	K21	2	2						
32	Distance piece for bearing	ACF4003	K22	2	2						
33	Bearing for hub—outer	ACF4000	K23	2	2						
34	Cup—grease-retaining	ATB4098	K24	2	2						Disc wheels
35	Distance washer for hub	ACF4001	K25	2	2						
36	**Hub assembly—R/H**	**ATB4180**		1	1						Wire wheels
37	**Hub assembly—L/H**	**ATB4181**	**K26**	1	1						
38	Stud—wheel	ATB4124	K27	12	12						
39	Retainer—grease	ATB4131	K28	2	2						

Item No.	DESCRIPTION	Commencing (C) 10101 Part Number	Illus. No.	Qty. per Vehicle RHD	Qty. per Vehicle LHD	Unit of Issue	Type of Vehicle	MODIFICATIONS New Part Number	MODIFICATIONS Change Point	MODIFICATIONS Amdt. No.	REMARKS
	Front Axle and Suspension—*continued*										
1	**Plate—brake—R/H**	**ATB4190**		**1**	**1**						
2	**Plate—brake—L/H**	**ATB4191**	**KA1**	**1**	**1**						
3	Bolt—brake-plate to steering knuckle	ATC4067	KA2	8	8						
4	Nut for bolt	FNZ106	KA3	8	8						
5	Washer for nut (spring)	LWZ306	KA4	8	8						
6	**Shoe assembly—brake**	**8G8025**	**KA5**	**2 sets**	**2 sets**	**1**					
7	Lining with rivets	AJH5172		1 box	1 box	1					
8	Spring—brake-shoe pull-off	7H7936	KA6	4	4						
9	Adjuster assembly	7H7931	KA7	4	4						
10	Mask for adjuster	7H7930	KA8	4	4						
11	**Cylinder assembly—wheel—R/H**	**7H7949**		**2**	**2**						
12	**Cylinder assembly—wheel—L/H**	**7H7950**		**2**	**2**						
13	Body—R/H	7H7947		1	1						
14	Body—L/H	7H7948	KA9	1	1						
15	Piston and dust cover	7H7941	KA10	2	2						
16	Cup for piston	7H7924	KA11	2	2	6					
17	Filler for piston cup	7H7938	KA12	2	2						
18	Spring for filler	7H7939	KA13	2	2						
19	Ring—sealing	7H7753	KA14	2	2						
20	Bolt—cylinder to brake-plate ($\frac{5}{16}$")	7H7636	KA15	4	4						
21	Washer for bolt (spring)	7H7368	KA16	4	4						
22	Bolt—cylinder to brake-plate ($\frac{1}{4}$")	7H7520	KA17	4	4						
23	Washer for bolt	7H7367	KA18	4	4						
24	Screw—bleeder	3H2428	KA19	2	2						
25	**Drum—brake**	**ATB7075**	**KA20**	**2**	**2**						Disc wheels
26	Screw—drum to hub	CMZ0407	KA21	4	4						
27	Plug—brake-drum (large)	ACH5703	KA22	2	2						
28	Plug—brake-drum (small)	ACH5704		2	2						
29	**Drum—brake**	**ATB4165**	**KA23**	**2**	**2**						Wire wheels
30	Nut—drum to hub	FNZ206	KA24	12	12						
31	Tab—drum to hub (locking)	ATB4125	KA25	6	6						
32	Plug—brake-drum (large)	140677	KA26	A/R	A/R						
33	Plug—brake-drum (small)	AHH5514		A/R	A/R						

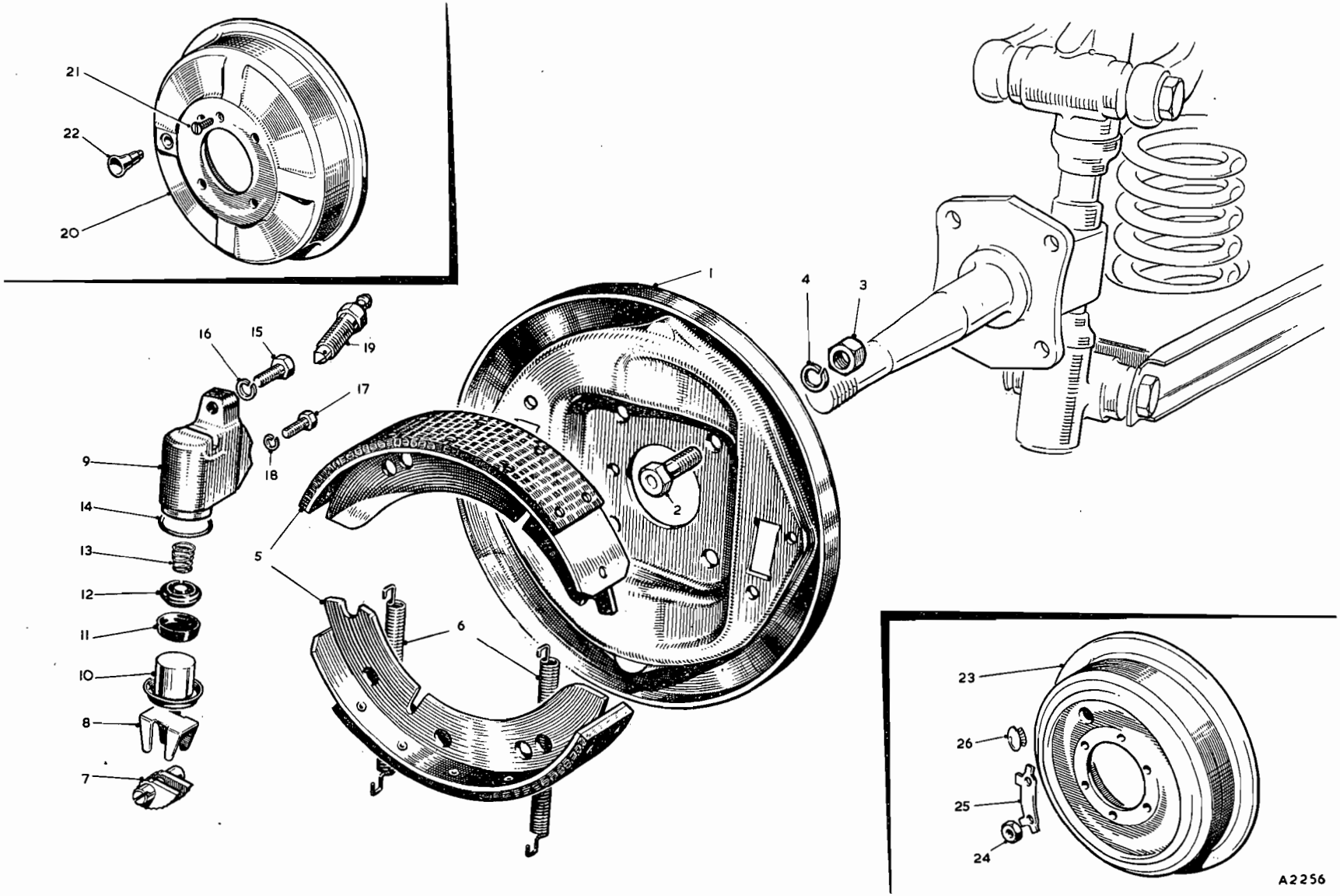
21
22
20
1
4
3
16
15
19
17
18
9
14
13
12
11
10
8
7
5
6
2
23
26
25
24
A2256

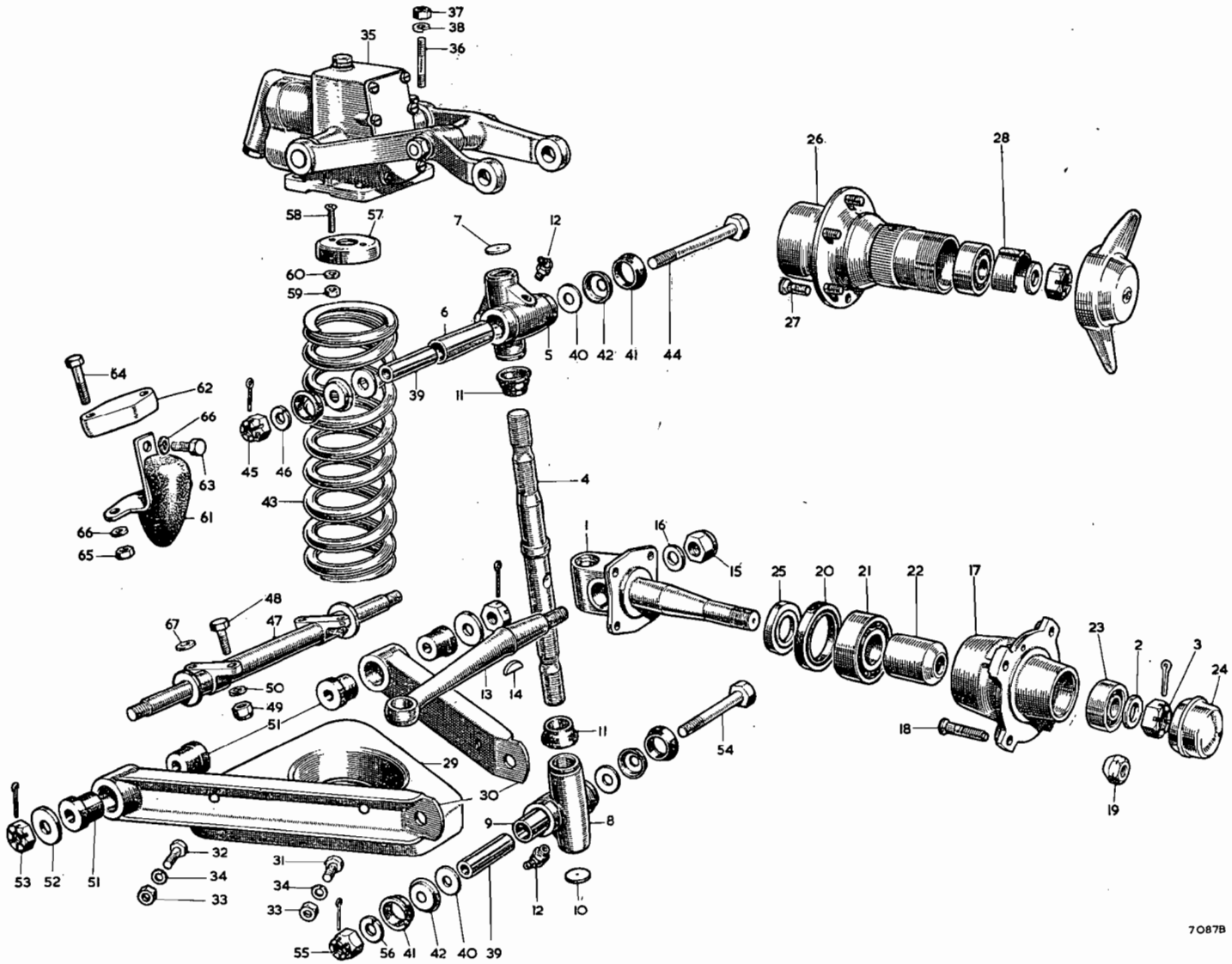

To face page K.3

Item No.	DESCRIPTION	Commencing (C) 10101 Part Number	Illus. No.	Qty. per Vehicle RHD	Qty. per Vehicle LHD	Unit of Issue	Type of Vehicle	MODIFICATIONS New Part Number	MODIFICATIONS Change Point	MODIFICATIONS Amdt. No.	REMARKS
	Front Axle and Suspension—*continued*										
1	**Spring pan assembly**	**126905**	**K29**	2	2			**AHH5925**	**Com. (C) 66574**		
2	**Bottom wishbone assembly**	**126908**	**K30**	4	4						
3	Screw—spring pan to wishbone	HZS0507	K31	4	4						
4	Screw—spring pan to wishbone	HZS0508	K32	4	4						
5	Nut for screw	FNZ105	K33	8	8						
6	Washer for screw (spring)	LWZ205	K34	8	8	24					
7	**Absorber—shock**	**AHH4004**	**K35**	2	2						
8	Stud—shock absorber to cross-member	AHH5070	K36	8	8						
9	Nut for stud	FNZ106	K37	8	8						
10	Washer for nut (spring)	LWZ206	K38	8	8						
11	Distance tube for link	126900	K39	4	4						
12	Washer for link (thrust)	127657	K40	8	8						
13	Seal—link	126902	K41	8	8						
14	Support for link seal	126903	K42	8	8						
15	**Spring—coil**	**139105**	**K43**	2	2			**AHH5546**	**Com. (C) 15152**		**Prior to (C) 15152 supply in pairs only**
16	Bolt—wishbone to link	AHH4002	K44	2	2						
17	Nut for bolt	FNZ308	K45	2	2						
18	Washer for bolt (spring)	LWZ208	K46	2	2						
19	**Wishbone—pivot**	**AHH4003**	**K47**	2	2						
20	Bolt—pivot to member	ACB5255	K48	8	8						
21	Nut for bolt	LNZ106	K49	8	8						
22	Washer for bolt (spring)	LWZ206	K50	8	8						
23	Bush—bottom wishbone	126914	K51	8	8						
24	Washer—wishbone pivot	126915	K52	4	4						
25	Nut for wishbone pivot (slotted)	FNZ408	K53	4	4						
26	Bolt—bottom wishbone to link	AHH4001	K54	2	2						
27	Nut for bolt	FNZ308	K55	2	2						
28	Washer for bolt (spring)	LWZ208	K56	2	2						
29	Spigot—spring	AHH5897	K57	2	2						
30	Screw—spigot to member	CMZ0418	K58	4	4						
31	Nut for screw	FNZ104	K59	4	4						
32	Washer for screw (spring)	LWZ204	K60	4	4						
33	**Rubber—check**	**500822**	**K61**	2	2						
34	Distance piece for check rubber	500823	K62	2	2						
35	Screw—check rubber to member	HZS0504	K63	2	2						
36	Bolt—check rubber to member	HBZ0512	K64	4	4						
37	Nut for bolt	FNZ105	K65	4	4						
38	Washer for nut (spring)	LWZ205	K66	6	6	24					
39	Washer for nut (plain)	PWZ106	K67	2	2						

Item No.	DESCRIPTION	Commencing (C) 10101		Qty. per Vehicle		Unit of Issue	Type of Vehicle	MODIFICATIONS			REMARKS
		Part Number	Illus. No.	RHD	LHD			New Part Number	Change Point	Amdt. No.	
	Front Axle and Suspension—*continued*										
1	Link—anti-roll bar—R/H			1	1			AHH5931			Optional extra. Andrex dampers and anti-roll bar equipment not to be used simultaneously
2	Link—anti-roll bar—L/H			1	1			AHH5932			
3	Nut—link to spring pan			2	2			FNZ108			
4	Washer for nut (spring)			2	2			LWZ208			
5	Bar assembly—anti-roll			1	1			AHH5940			
6	Bush			2	2			AHH5939			
7	Bolt—link to bar			2	2			AHH5941			
8	Nut for bolt			2	2			LNZ107	Com. (C) 66574		
9	Washer for nut (plain)			2	2			PWZ107			
10	Bush—anti-roll bar			2	2			AHH5934			
11	Housing for bush			2	2			AHH5935			
12	Screw—housing to member			4	4			HZS0505			
13	Nut for screw			4	4			FNZ105			
14	Washer for nut (spring)			4	4			LWZ205			
15	Wishbone assembly—bottom—R/H			1	1			AHH5927			
16	Wishbone assembly—bottom—L/H			1	1			AHH5929			

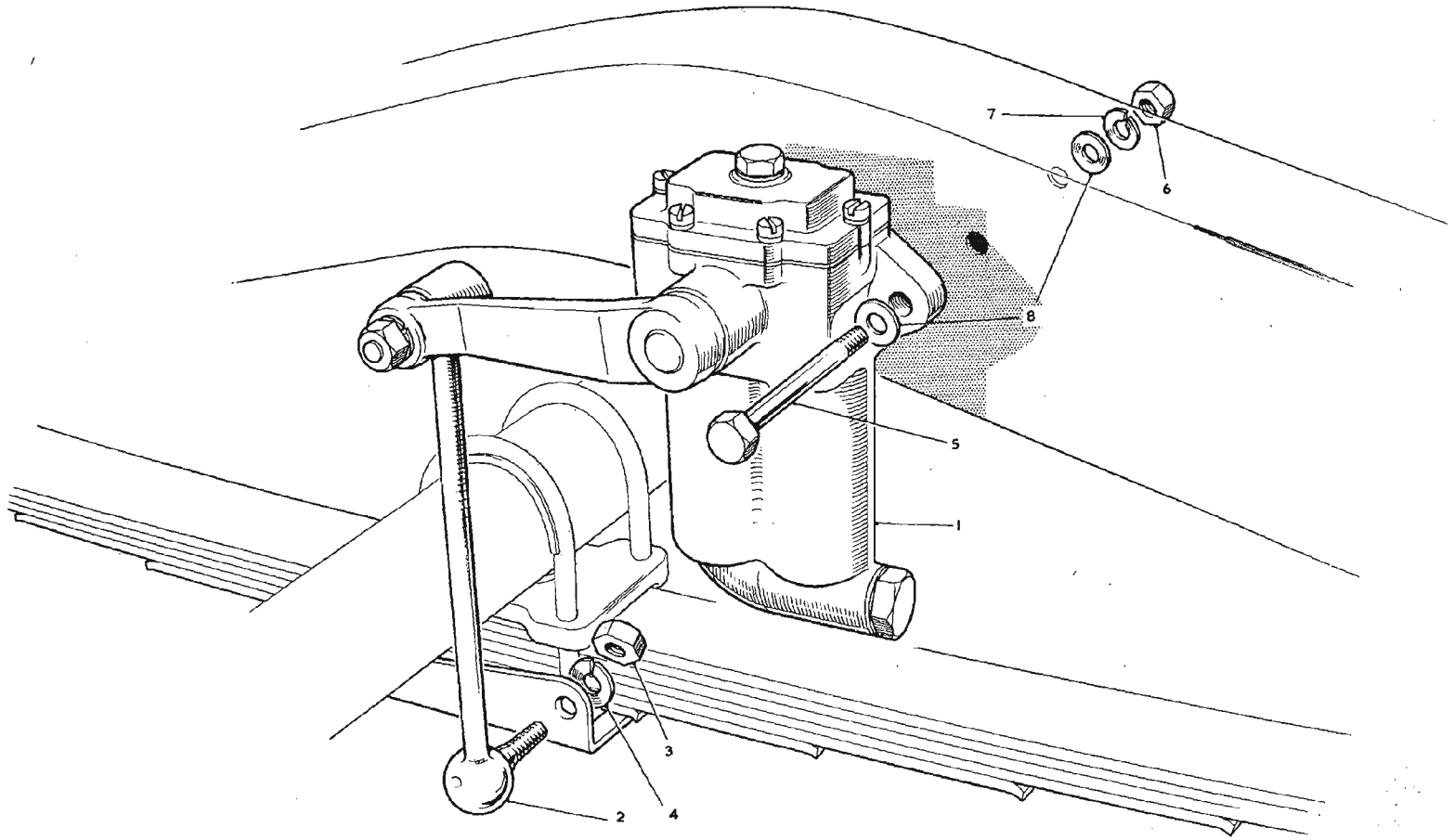

A2140

To face page L.1

REAR SHOCK ABSORBER

Item No.	DESCRIPTION	Commencing (C) 10101 Part Number	Illus. No.	Qty. per Vehicle RHD	Qty. per Vehicle LHD	Unit of Issue	Type of Vehicle	MODIFICATIONS New Part Number	MODIFICATIONS Change Point	MODIFICATIONS Amdt. No.	REMARKS
1	**Shock absorber—rear—R/H**	**AHH5029**		1	1						
2	**Shock absorber—rear—L/H**	**AHH5030**	**L1**	1	1						
3	Link—shock absorber	97H2031	L2	2	2						
4	Nut—link to bracket	FNZ108	L3	4	4						
5	Washer for nut (spring)	LWN208	L4	4	4						
6	Bolt for shock absorber to frame	HBZ0728	L5	4	4						
7	Nut for frame bolt	FNZ107	L6	4	4						
8	Washer for frame bolt (spring)	LWZ207	L7	4	4						
9	Washer for frame bolt (plain)	PWZ107	L8	8	8						

BRAKE CONTROLS

Item No.	DESCRIPTION	Commencing (C) 10101 Part Number	Illus. No.	Qty. per Vehicle RHD	Qty. per Vehicle LHD	Unit of Issue	Type of Vehicle	MODIFICATIONS New Part Number	MODIFICATIONS Change Point	MODIFICATIONS Amdt. No.	REMARKS
1	**Pedal—brake**	**AHH5090**	**M1**	**1**	**1**			**AHH5840**	**Com. (C) 58713**		
2	Bush for pedal	185794	M2	1	1						
3	Pad for pedal (rubber)	AHH5100	M3	1	1						
4	Distance piece—pedal	185795	M4	2	2						
5	Distance washer—pedal	185798	M5	1	1						
6	Bolt for pedal bracket	HBZ0622	M6	1	1						
7	Nut for pedal bracket bolt	FNZ106	M7	1	1						
8	Washer for nut (spring)	LWZ206	M8	1	1						
9	Distance tube—pedal stop	AHH5092	M9	1	1						
10	Bolt for distance tube	HBZ0436	M10	1	1						
11	Nut for distance tube bolt	FNZ104	M11	1	1						
12	Washer for nut (spring)	LWZ204	M12	1	1						
13	Fume excluder—brake and clutch pedal	AHH5101	M13	1	1						
14	Blanking piece (rubber)	AHH5103	M14	1	1						
15	Cover—blanking piece	AHH5102	M15	2	2						
16	Screw for cover	HZS0506	M16	2	2						
17	Screw for cover	HPZ0508	M17	2	2						
18	Nut for screw	FNZ105	M18	2	2						
19	Washer for screw (spring)	LWZ205	M19	4	4	24					
20	Washer for screw (plain)	PWZ205	M20	4	4						
21	Box for master cylinder	AHH5083	M21	1	1						
22	Screw for box to bulkhead	HZS0505	M22	4	4						
23	Nut for screw	FNZ105	M23	4	4						
24	Washer for nut (plain)	PWZ205	M24	4	4						
25	Washer for nut (spring)	LWZ205	M25	4	4	24					
26	Screw—box to bracket—rear	HZS0506	M26	2	2						
27	Screw—box to bracket—front	HZS0507	M27	2	2						
28	Washer for front screw	PWZ205	M28	2	2						
29	Washer for screw (spring)	LWZ205	M29	4	4	24					
30	Nut for box to bracket screw	FNZ105	M30	4	4						
31	Base plate assembly for master cylinder box	AHH5089	M31	1	1						
32	Screw for base plate to cross-bar	HPZ0508	M32	2	2						
33	Washer for screw (spring)	LWZ205	M33	2	2	24					
34	Support bracket—R/H	AHH5084		1	1						
35	Support bracket—L/H	AHH5085	M34	1	1						
36	Screw—bracket to tapping plate	HZS0506	M35	4	4						
37	Screw—bracket to base plate	HZS0506	M36	2	2						
38	Nut for screw	FNZ105	M37	2	2						
39	Washer for nut (spring)	LWZ205	M38	6	6	24					

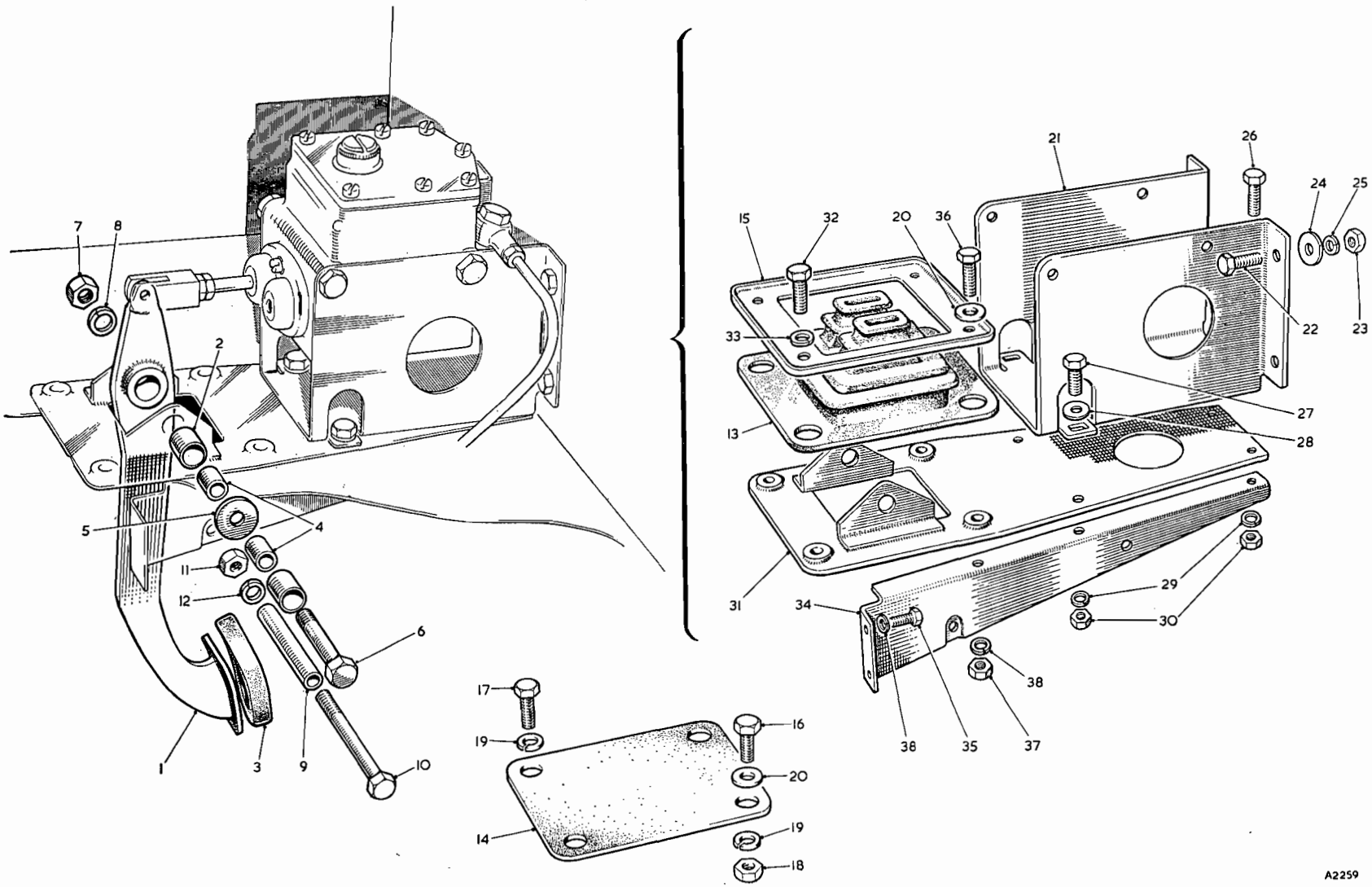

To face page M.1

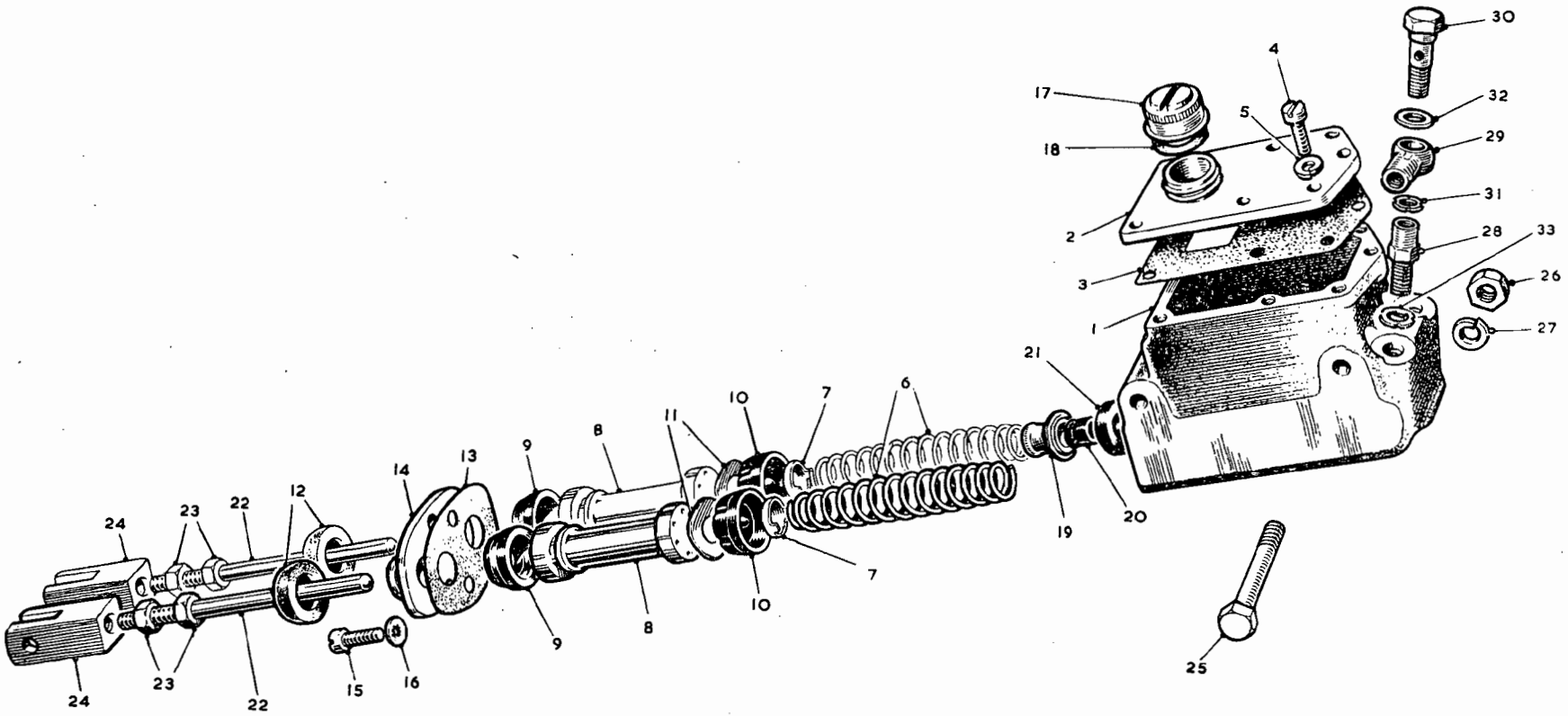

To face page M.2

Item No.	DESCRIPTION	Commencing (C) 10101 Part Number	Illus. No.	Qty. per Vehicle RHD	Qty. per Vehicle LHD	Unit of Issue	Type of Vehicle	MODIFICATIONS New Part Number	MODIFICATIONS Change Point	MODIFICATIONS Amdt. No.	REMARKS
	BRAKE AND CLUTCH MASTER CYLINDER										
1	**Cylinder and supply tank assembly**	**AJH5128**		1	1						
2	Body	AJH5082	MA1	1	1						
3	Cover for body	AJH5085	MA2	1	1						
4	Joint for cover	AJH5086	MA3	1	1						
5	Screw—cover to body	301551	MA4	5	5						
6	Washer for screw (shakeproof)	LWN404	MA5	5	5						
7	Spring—piston return	AJH5083	MA6	2	2						
8	Retainer for spring	17H7571	MA7	2	2						
9	Piston	7H7925	MA8	2	2						
10	Cup—primary—for piston	7H7485	MA9	2	2	12					
11	Cup—secondary—for piston	17H7109	MA10	2	2						
12	Washer—primary clip to piston	7H7484	MA11	2	2						
13	Boot—push-rod	AJH5084	MA12	2	2						
14	Joint for boot fixing plate	301550	MA13	1	1						
15	Plate for boot fixing	301549	MA14	1	1						
16	Screw—plate	301551	MA15	2	2						
17	Washer for screw (shakeproof)	LWN404	MA16	2	2						
18	**Cap—filler**	**17H7480**	**MA17**	1	1						
19	Seal	AJG5016	MA18	1	1						
20	**Valve assembly**	**68701**		1	1						
21	Body	7H7488	MA19	1	1						
22	Cup	7H7022	MA20	1	1						
23	Washer	7H7489	MA21	1	1	12					
24	**Push-rod**	**BCA4046**	**MA22**	2	2						
25	Nut—locking	LNZ205	MA23	4	4						
26	Yoke—push-rod to pedal	AJH5133	MA24	2	2						
27	Bolt—master cylinder to box	HBZ0624	MA25	2	2						
28	Nut for master cylinder to box bolt	FNZ106	MA26	2	2						
29	Washer for bolt (spring)	LWZ206	MA27	2	2						
30	Adaptor—master cylinder	AHH5284	MA28	1	1						
31	Banjo—master cylinder	3H544	MA29	1	1						
32	Bolt—banjo	3H547	MA30	1	1						
33	Joint for banjo connection	7H7456	MA31	1	1						
34	Joint for banjo connection	3H550	MA32	1	1						
35	Joint for adaptor	3H2287	MA33	1	1						

Item No.	DESCRIPTION	Commencing (C) 10101 Part Number	Illus. No.	Qty. per Vehicle RHD	Qty. per Vehicle LHD	Unit of Issue	Type of Vehicle	MODIFICATIONS New Part Number	MODIFICATIONS Change Point	MODIFICATIONS Amdt. No.	REMARKS
	HYDRAULIC PIPES AND FITTINGS										
1	**Pipe—master cylinder to 4-way piece (34")**	**AHH5278**	**MB1**	1							
2	**Pipe—master cylinder to 4-way piece (56")**	**AHH5282**	**MB2**		1						
3	Pipe—4-way to wheel cylinder—R/H front (19")	AHH5279	MB3	1	1						
4	Pipe—4-way to wheel cylinder—L/H front (47")	AHH5280	MB4	1	1						
5	Pipe—4-way to rear hose (75")	AHH5281	MB5	1	1						
6	Bridge pipe for front wheel cylinder (13")	ACH5305	MB6	2	2						
7	Pipe—rear hose bracket to wheel cylinder—rear—R/H	AJD30	MB7	1	1			AHH5629	Com. (C) 27989 (disc wheels), (C) 28540 (wire wheels)		
8	Pipe—rear hose bracket to wheel cylinder—rear—L/H	AJD82	MB8	1	1			AHH5631	Com. (C) 27989		Disc wheels only
9	Pipe—rear hose bracket to wheel cylinder—rear—L/H	AJD78		1	1			AHH5633	Com. (C) 28540		Wire wheels only
10	Hose—brake	17H7526	MB9	3	3						
11	Washer for hose	LWN710	MB10	3	3						
12	Locknut for hose	2K8686	MB11	3	3						
13	Joint for brake hose	3H2287	MB12	3	3						
14	Four-way piece	AHH5283	MB13	1	1						
15	Stud for 4-way piece to side-member	AHH5195	MB14	1	1						
16	Nut for 4-way piece stud	FNZ104	MB15	1	1						
17	Washer for stud (spring)	LWZ204	MB16	1	1						
18	Three-way piece for rear axle	AJA5028	MB17	1	1			3H2424	Com. (C) 27989 (disc wheels), (C) 28540 (wire wheels)		
19	Screw for 3-way piece and clip to axle bracket	HZS0505	MB18	1	1						
20	Washer for screw (spring)	LWZ205	MB19	1	1	24					
21	Nut for screw	FNZ105	MB20	1	1						
22	Strap for brake pipe to axle	ACH8650	MB21	1	1						
23	Bracket for 3-way piece		MB22	1	1			AHH5627	Com. (C) 27989 (disc wheels), (C) 28540 (wire wheels)		
24	Bolt for 3-way piece to axle bracket		MB23	1	1			HBZ0408			
25	Nut for bolt		MB24	1	1			FNZ104			
26	Washer for bolt (spring)		MB25	1	1			LWZ204			
27	Clip for brake pipe	PCR0311	MB26	1	1						
28	Clip for rear brake pipe—L/H—to differential case bolt	PCR0311	MB27	1	1						
29	Clip for main pipe to battery carrier	PCR0307	MB28	1	1						
30	Clip for brake pipe to R/H toeboard bolt	PCR0309	MB29		1						
31	Clip for brake pipe to toeboard	CHR0409	MB30	1							

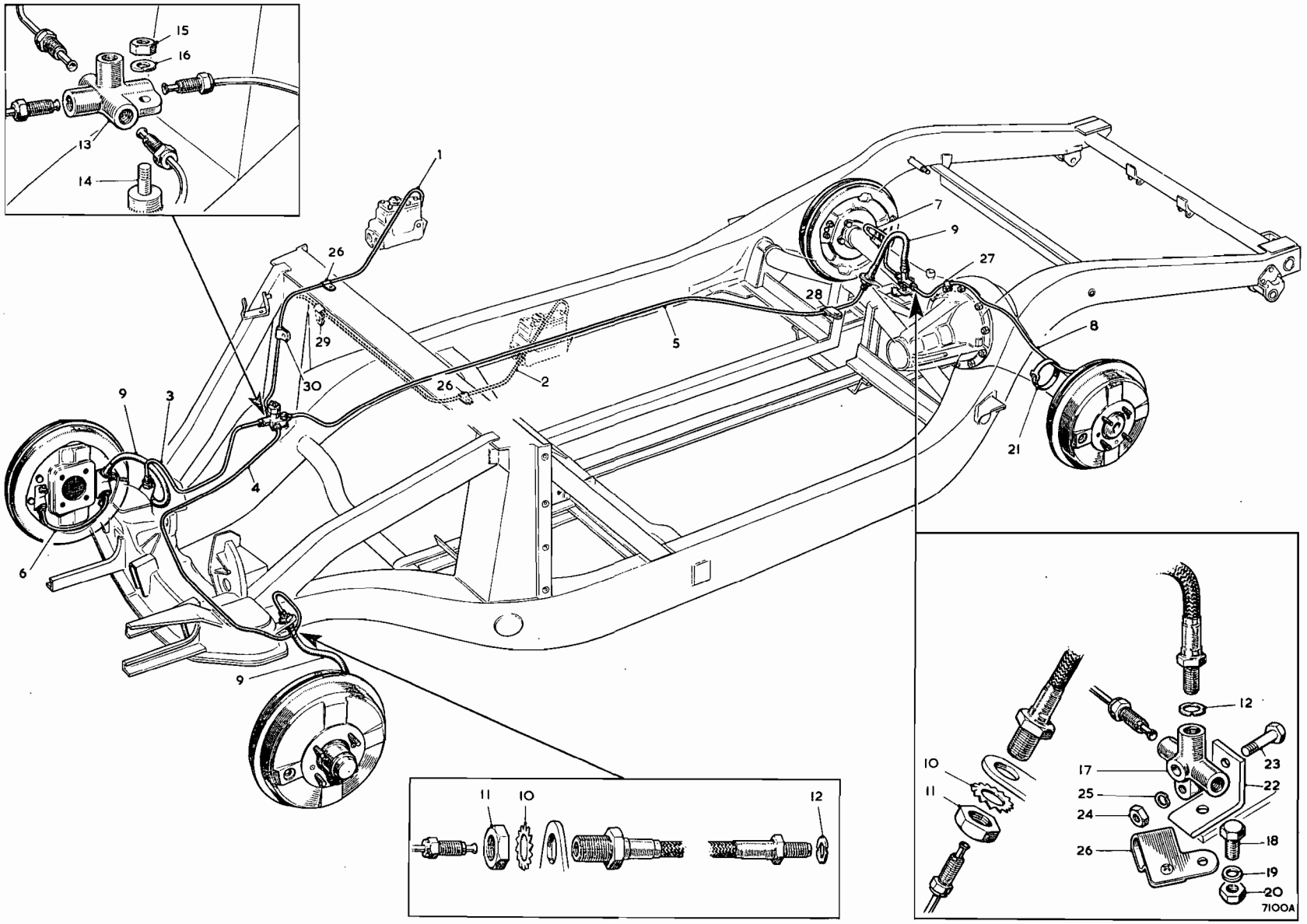
15
16
13
14
1
26
29
30
26
2
5
7
9
27
28
8
21
9
3
4
6
9
11
10
12
10
11
12
17
25
24
26
23
22
18
19
20
7100A

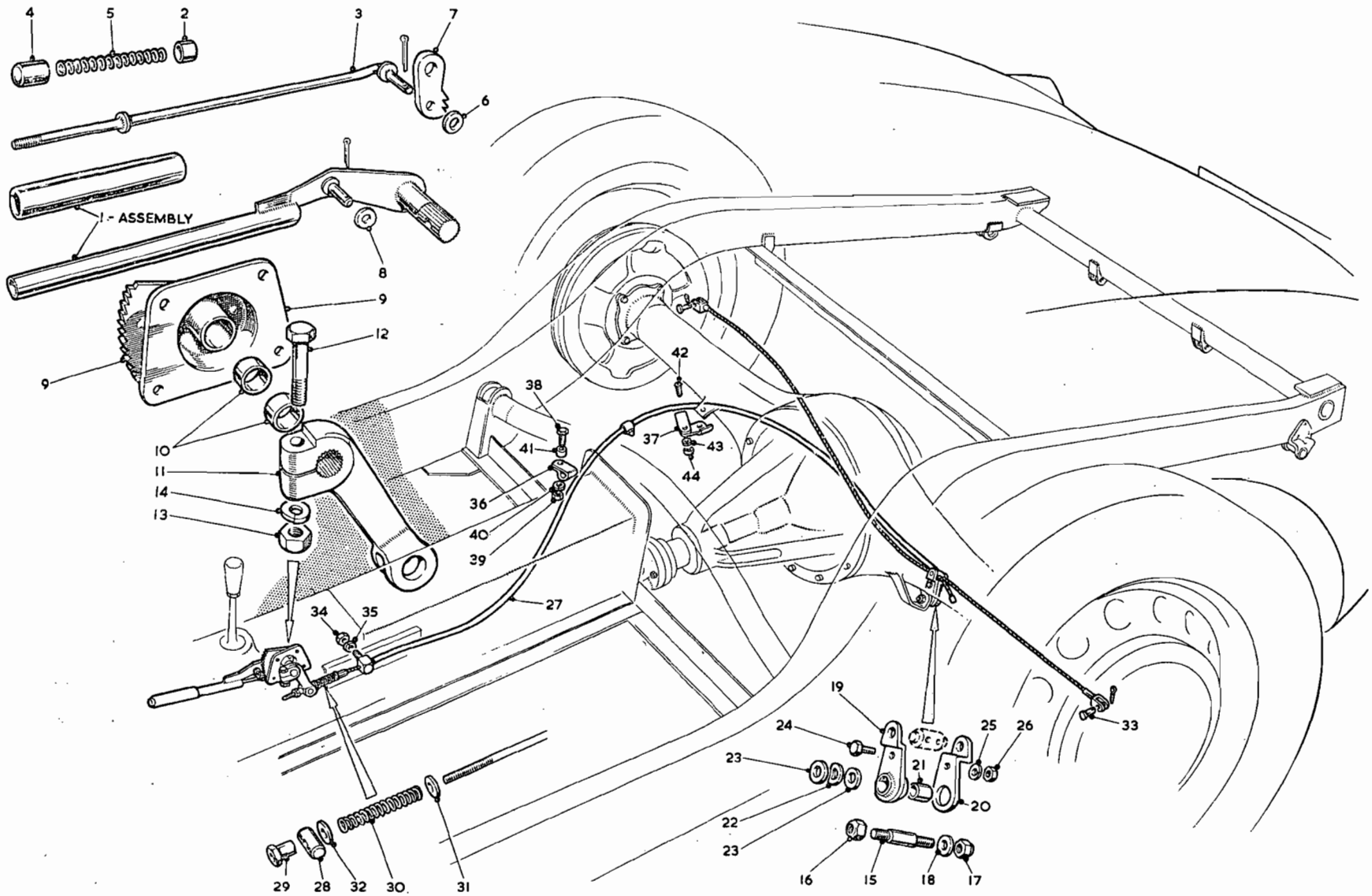

To face page M.4

Item No.	DESCRIPTION	Commencing (C) 10101 Part Number	Illus. No.	Qty. per Vehicle RHD	Qty. per Vehicle LHD	Unit of Issue	Type of Vehicle	MODIFICATIONS New Part Number	MODIFICATIONS Change Point	MODIFICATIONS Amdt. No.	REMARKS
	HAND BRAKE MECHANISM										
1	**Hand brake assembly**	**AHH5229**		1	1						
2	Handle plate and shaft assembly	AHH5230	MC1	1	1						
3	Bush for handle plate and shaft	81756	MC2	1	1						
4	Pawl rod assembly	AHH5233	MC3	1	1						
5	Knob for pawl rod	ACC8956	MC4	1	1						
6	Spring for pawl rod	80641	MC5	1	1						
7	Washer (plain)	PWZ103	MC6	1	1						
8	Pawl	AHH5238	MC7	1	1						
9	Washer (plain)	PWZ105	MC8	1	1						
10	**Fulcrum and ratchet assembly**	**AHH5232**	**MC9**	1	1						
11	Bush	AHH5242	MC10	2	2						
12	Screw for hand brake to gearbox cover	HZS0504		5	5						
13	Screw for hand brake to gearbox cover	HZS0505		3	3						
14	Nut for screw—hand brake to gearbox cover	FNZ105		8	8						
15	Washer for screw (spring)	LWZ205		8	8	24					
16	Operating lever for hand brake	AHH5244	MC11	1	1						
17	Bolt for operating lever	HBZ0510	MC12	1	1						
18	Nut for bolt operating lever	FNZ105	MC13	1	1						
19	Washer for bolt (spring)	LWZ205	MC14	1	1	24					
20	Fulcrum for hand brake compensator	AHH5025	MC15	1	1						
21	Nut for fulcrum to axle	LNZ106	MC16	1	1						
22	Nut for compensator to fulcrum	LNZ105	MC17	1	1						
23	Washer for compensator to fulcrum (plain)	PWZ205	MC18	1	1						
24	Lever—inner compensating	AHH5203	MC19	1	1						
25	Lever—outer compensating	ACH5101	MC20	1	1						
26	Bush for compensating lever	AHH5225	MC21	1	1						
27	Washer for compensating lever (anti-rattle)	AHH5224	MC22	1	1						
28	Washer for compensating lever (plain)	PWZ107	MC23	2	2						
29	Screw for compensating lever	HZS0405	MC24	1	1						
30	Washer for compensating lever (spring)	LWZ204	MC25	1	1						
31	Nut for screw—compensating lever	FNZ104	MC26	1	1						
32	**Cable—hand brake**	**AHH5227**	**MC27**	1	1						**Disc wheels**
33	**Cable—hand brake**	**AHH5228**		1	1						**Wire wheels**
34	Trunnion for cable	AHH5822	MC28	1	1						
35	Adjuster nut	ACH5104	MC29	1	1						
36	Spring for cable	ACH8508	MC30	1	1						
37	Washer for cable spring—rear (plain)	PWZ104	MC31	1	1						
38	Washer for cable spring—front (plain)	PWZ204	MC32	1	1						
39	Clevis pin	ACB8715	MC33	2	2						

Item No.	DESCRIPTION	Commencing (C) 10101 Part Number	Illus. No.	Qty. per Vehicle RHD	Qty. per Vehicle LHD	Unit of Issue	Type of Vehicle	MODIFICATIONS New Part Number	MODIFICATIONS Change Point	MODIFICATIONS Amdt. No.	REMARKS
	Hand Brake Mechanism—*continued*										
1	Abutment nut	FNZ105	MC34	1	1						
2	Washer for abutment (spring)	LWZ205	MC35	1	1	24					
3	Clip for cable to battery carrier	PCR0507	MC36	1	1						
4	Clip for cable to 3-way piece to axle brackets	AHH5295	MC37	1	1						
5	Screw for clip to battery carrier and main pipe clip	PMZ0316	MC38	1	1						
6	Nut for clip screw	FNZ103	MC39	1	1						
7	Washer for battery carrier clip (spring)	LWZ203	MC40	1	1						
8	Distance tube for battery carrier clip	AHH5297	MC41	1	1						
9	Screw for clip—3-way piece	PMZ0306	MC42	1	1						
10	Washer for 3-way piece clip screw (spring)	LWZ203	MC43	1	1						
11	Nut for 3-way piece clip screw	FNZ103	MC44	1	1						

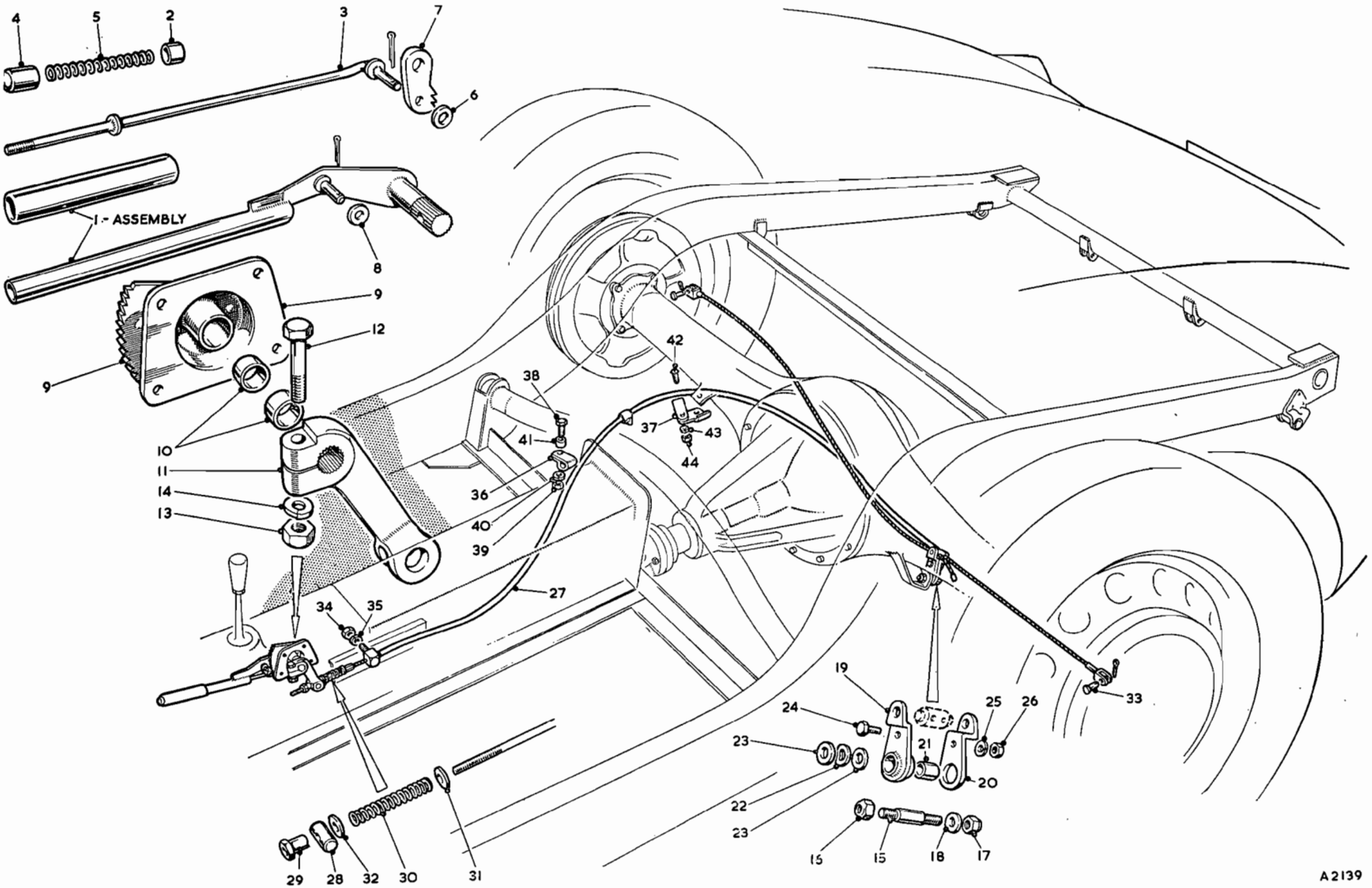

To face page M.5

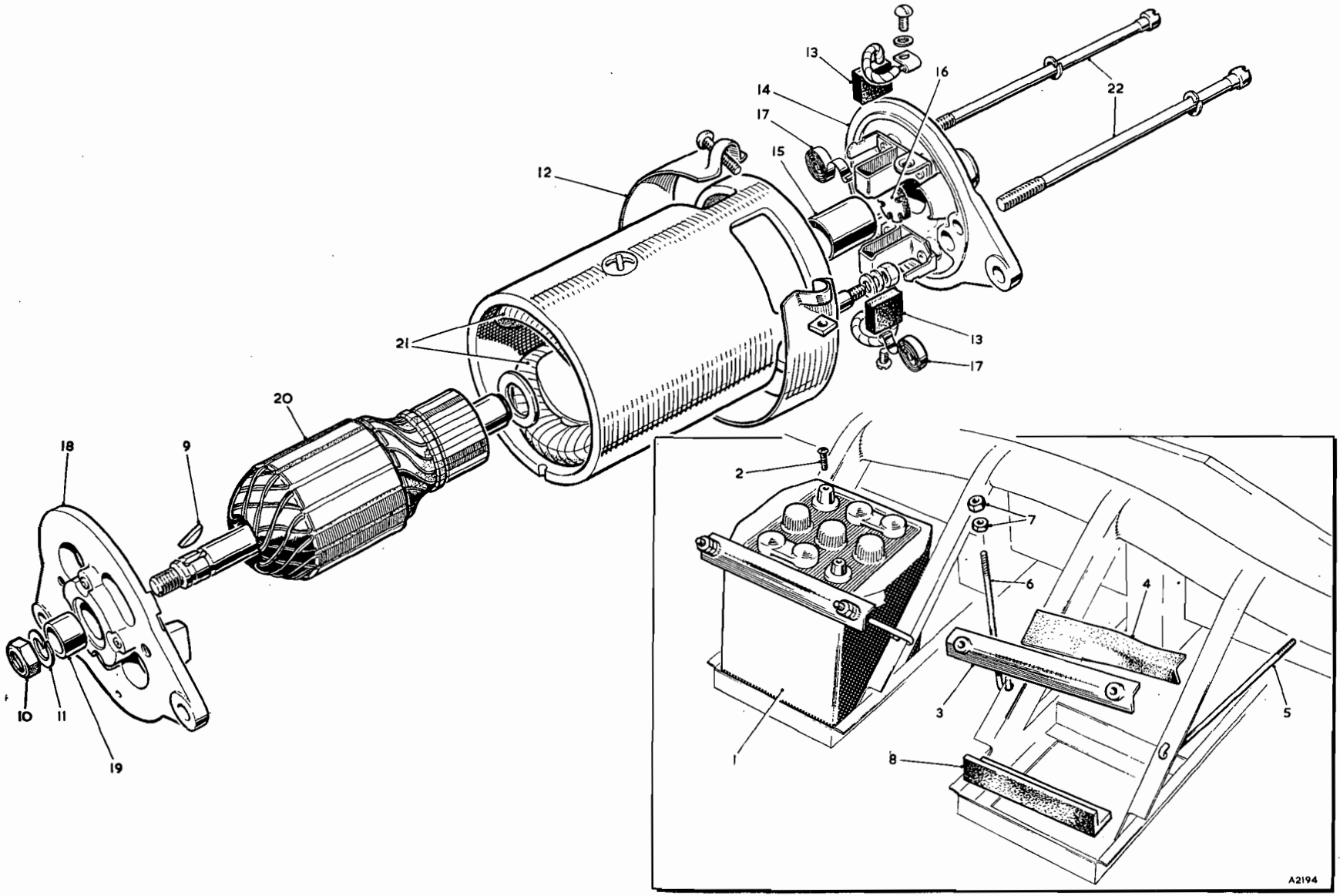

To face page N.1

Item No.	DESCRIPTION	Commencing (C) 10101 Part Number	Illus. No.	Qty. per Vehicle RHD	Qty. per Vehicle LHD	Unit of Issue	Type of Vehicle	MODIFICATIONS New Part Number	MODIFICATIONS Change Point	MODIFICATIONS Amdt. No.	REMARKS
	ELECTRICAL EQUIPMENT										
	BATTERY										
1	**Battery—wet**	**N.8.P.**	**N1**	2	2						
2	Terminal screw	2K8645	N2	2	2						
3	Clamp for battery	AHH5166	N3	2	2						
4	Packing for battery clamp	AHH5169	N4	2	2						
5	Bolt for battery fixing (long)	AHH5167	N5	2	2						
6	Bolt for battery fixing (short)	AHH5168	N6	2	2						
7	Locknuts for battery fixing bolts	FNZ204	N7	8	8						
8	Battery pad (rubber)	AHH5170	N8	4	4						
9	Battery cover	BHA4140		2	2						Optional extra
10	Cap nut—cover	BHA4147		4	4						Optional extra
11	Bolt—battery (long)	AHH5964		2	2						Optional extra
12	Bolt—battery (short)	AHH5963		2	2						Optional extra
13	Nut for bolt	AJD8104Z		4	4						Optional extra
	DYNAMO										
14	**Dynamo**	**11G220**		1	1						
15	Key for pulley	WKN404	N9	1	1						
16	Nut for pulley	FNZ207	N10	1	1	12					
17	Washer for nut (spring)	LWZ207	N11	1	1						
18	Band cover	7H5027	N12	1	1						
19	Brush	7H5028	N13	1 set	1 set	1					
20	**Bracket—commutator end**	**7H5387**	**N14**	1	1						
21	Bush for bracket	7H5390	N15	1	1						
22	Oiler	17H5530	N16	1	1						
23	Spring—brush tension	7H5031	N17	1 set	1 set	1					
24	**Bracket—driving end**	**7H5388**	**N18**	1	1						
25	Bush for bracket—driving end	97H626	N19	1	1						
26	Armature	7H5389	N20	1	1						
27	Field coils	7H5071	N21	1 set	1 set	1					
28	Bolt—end cover	17H5217	N22	2	2						
29	Sundry parts	7H5376		1 set	1 set	1					

Item No.	DESCRIPTION	Commencing (C) 10101 Part Number	Illus. No.	Qty. per Vehicle RHD	Qty. per Vehicle LHD	Unit of Issue	Type of Vehicle	MODIFICATIONS New Part Number	MODIFICATIONS Change Point	MODIFICATIONS Amdt. No.	REMARKS
	STARTER										
1	**Starter**	**3H952**		1	1						
2	Brush	7H5040	NA1	1 set	1 set	1					
3	Band—cover	7H5038	NA2	1	1						
4	Pinion and barrel	7H5046	NA3	1	1						
5	Spring—pinion main	7H5045	NA4	1	1						
6	Spring—pinion return	7H5047	NA5	1	1						
7	Sleeve—screwed (with control nut)	7H5529	NA6	1	1						
8	Nut for shaft	7H5044	NA7	1	1						
9	Cap for shaft	7H5039	NA8	1	1						
10	**Bracket—commutator end**	**7H5041**	**NA9**	1	1						
11	Bush—commutator end	7H5042	NA10	1	1						
12	Spring—brush tension	7H5043	NA11	1 set	1 set	1					
13	**Bracket—driving end**	**7H5048**	**NA12**	1	1						
14	Bush—driving end	7H5049	NA13	1	1						
15	Armature	7H5050	NA14	1	1						
16	Field coils	7H5051	NA15	1 set	1 set	1					
17	Bolt for end covers	17H5444	NA16	2	2						
18	Sundry parts	7H5156		1 set	1 set	1					
19	Screw for starter to mounting plate	HBZ0613	NA17	2	2			53K149	Com. (C) 117331		
20	Washer for screw (spring)	LWN206	NA18	2	2						

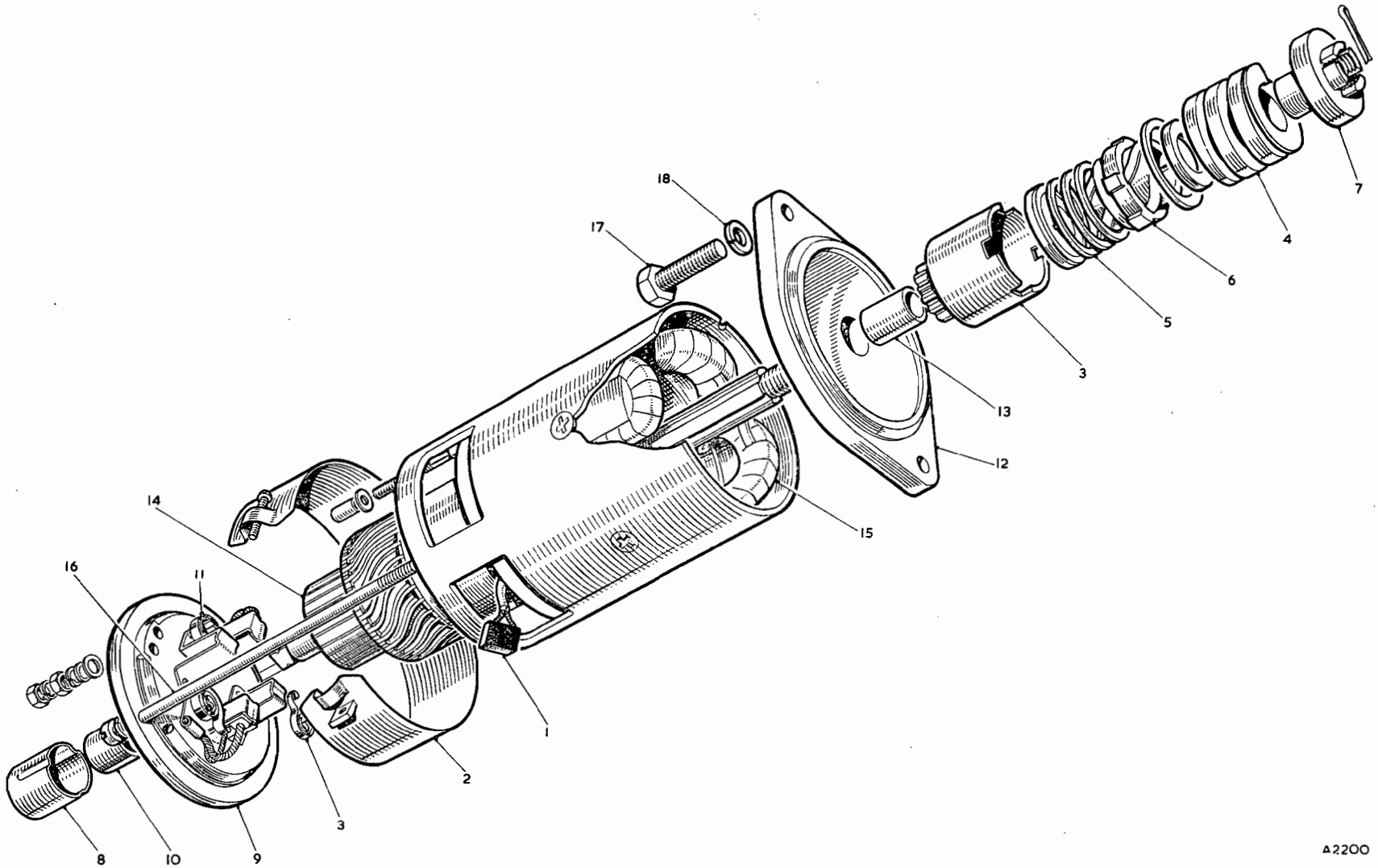

To face page N.2

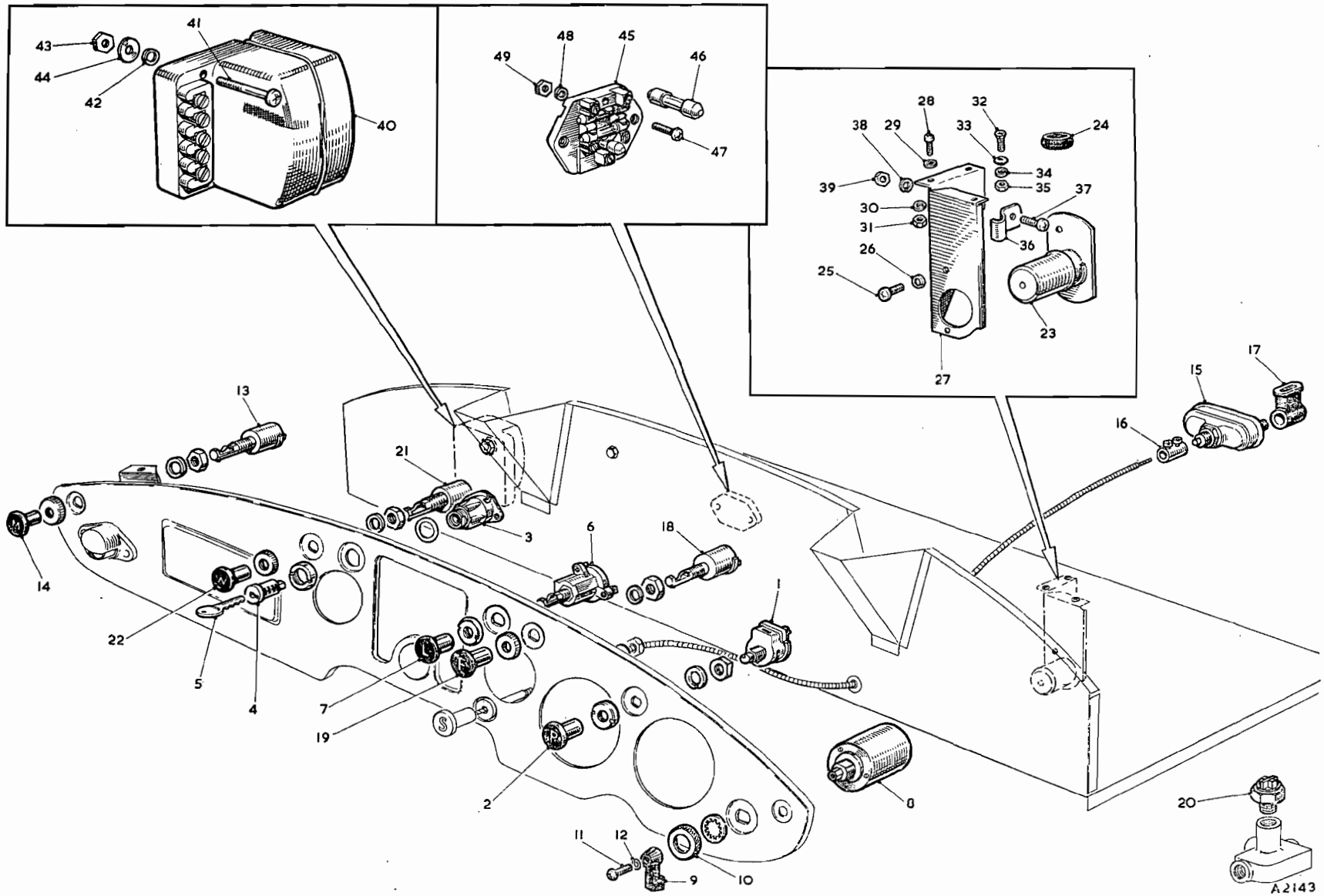

To face page N.3

Item No.	DESCRIPTION	Commencing (C) 10101 Part Number	Illus. No.	Qty. per Vehicle RHD	Qty. per Vehicle LHD	Unit of Issue	Type of Vehicle	MODIFICATIONS New Part Number	MODIFICATIONS Change Point	MODIFICATIONS Amdt. No.	REMARKS
	SWITCHES										
1	**Switch—panel light**	**47H5188**	**NB1**	1	1						
2	Knob for switch	AHH5368	NB2	1	1						
3	**Switch—ignition**	**AHH5369**	**NB3**	1	1						
4	Lock and key—ignition switch	7H9830	NB4	1	1						
5	Key	ANK4646	NB5	2	2						
6	**Switch—headlamp and sidelamp**	**3H3098**	**NB6**	1	1						
7	Knob for switch	AHH5360	NB7	1	1						
8	**Switch—flasher**	**AMK5607**	**NB8**	1	1						
9	Lever for switch	27H5511	NB9	1	1						
10	Nut fixing flasher switch (knurled)	17H5485	NB10	1	1						
11	Screw fixing lever	17H5483	NB11	1	1						
12	Washer for screw (spring)	17H5484	NB12	1	1						
13	**Switch—map-reading lamp**	**27H5278**	**NB13**	1	1						
14	Knob for switch	AHH5362	NB14	1	1						
15	**Switch—starter**	**3H949**	**NB15**	1	1						
16	Coupling—switch to control	3H950	NB16	1	1						
17	Bootee for terminal	8G548	NB17	2	2						
18	**Switch—fog lamp**	**27H5278**	**NB18**	1	1						
19	Knob for switch	AHH5366	NB19	1	1						
20	**Switch—stop lamp**	**3H1894**	**NB20**	1	1						
21	**Switch—windscreen wiper**	**27H5278**	**NB21**	1	1						
22	Knob for switch	AHH5364	NB22	1	1						
23	**Switch—dipper**	**11G2007**	**NB23**	1	1						
24	Grommet for bulkhead—dipper switch cable	ACB8474	NB24	1	1						
25	Screw fixing dipper switch to bracket	AJD1243Z	NB25	2	2						
26	Washer for screw (spring)	LWZ203	NB26	2	2						
27	Bracket for dipper switch	AHH5347	NB27	1	1						
28	Screw—bracket to bulkhead	PMZ0308	NB28	1	1						
29	Washer for screw (plain)	AJD7202	NB29	1	1						
30	Washer for screw (spring)	LWZ203	NB30	1	1						
31	Nut for screw	FNZ103	NB31	1	1						
32	Screw—bracket to bulkhead	CMZ0308	NB32	2	2						
33	Washer for screw (cup)	7722	NB33	2	2						
34	Washer for screw (spring)	LWZ203	NB34	2	2						
35	Nut for screw	FNZ103	NB35	2	2						
36	Clip—dipper switch cable to bracket	CHR0507	NB36	1	1						
37	Screw for clip to bracket	PMZ0307	NB37	1	1						
38	Washer for screw (spring)	LWZ203	NB38	1	1						
39	Nut for screw	FNZ103	NB39	1	1						

Item No.	DESCRIPTION	Commencing (C) 10101 Part Number	Illus. No.	Qty. per Vehicle RHD	Qty. per Vehicle LHD	Unit of Issue	Type of Vehicle	MODIFICATIONS New Part Number	MODIFICATIONS Change Point	MODIFICATIONS Amdt. No.	REMARKS
	Switches—*continued*										
1	**Box—control**	**3H1835**	**NB40**	**1**	**1**						
2	Screw for control box to dash	PMZ0320	NB41	2	2						
3	Washer for screw (spring)	LWZ203	NB42	2	2						
4	Nut for screw—control box to dash	FNZ103	NB43	2	2						
5	Washer—special	AJD7212	NB44	2	2						
6	**Box—fuse**	**1G2613**	**NB45**	**1**	**1**						
7	Fuse—35-amp.	7H5067	NB46	4	4						
8	Screw for fusebox to dash	PMZ0310	NB47	2	2						
9	Washer for screw (spring)	LWZ203	NB48	2	2						
10	Nut for screw—fusebox to dash	FNZ103	NB49	2	2						
11	Switch—headlamp flasher **(N. AMERICA)**	BHA4116			1						Optional extras
12	Relay—headlamp flasher **(N. AMERICA)**	3H1911			1						
13	Screw fixing relay	PMZ0308			2						
14	Nut for screw	FNZ103			2						
15	Washer for nut (spring)	LWZ203			2						

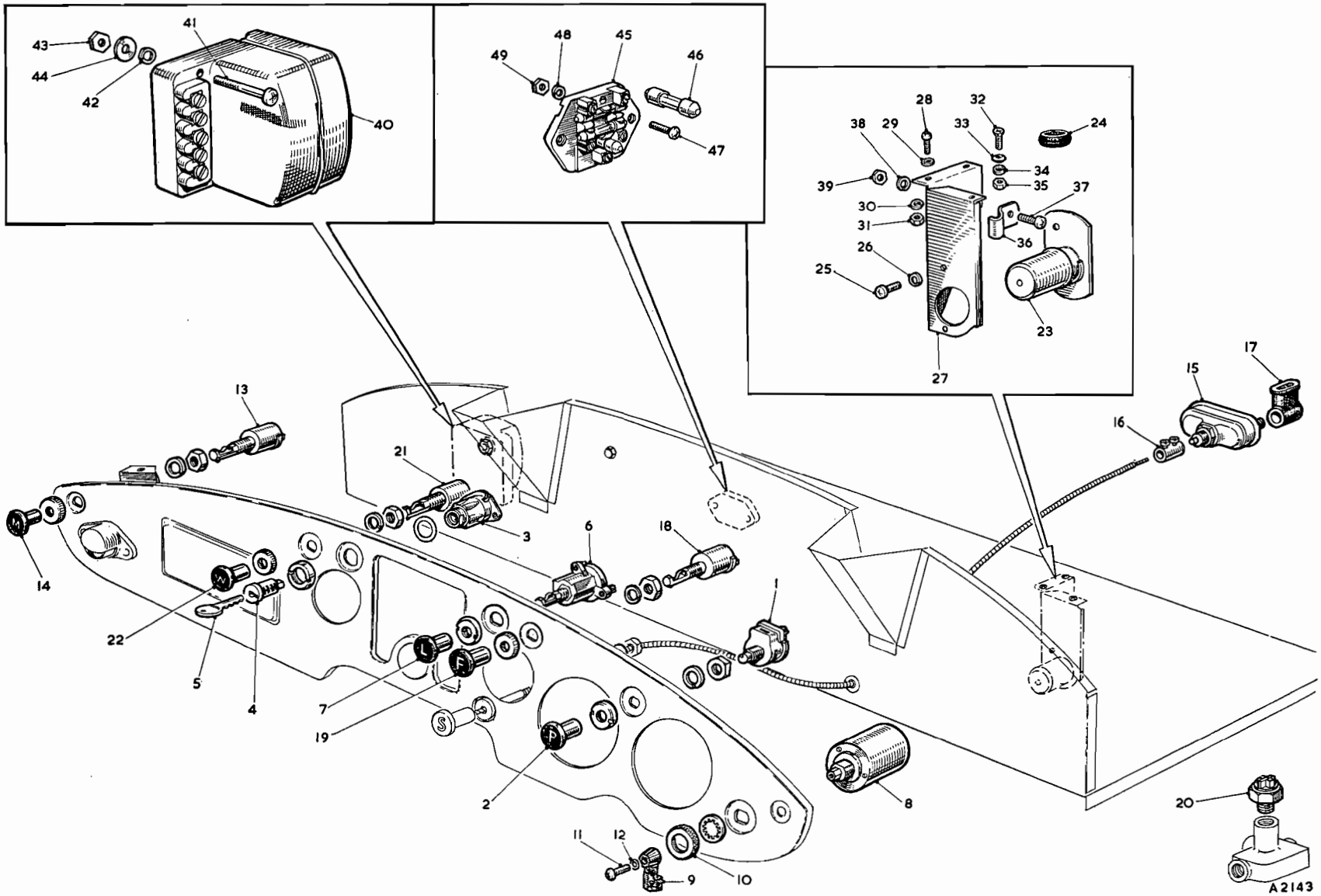

To face page N.4

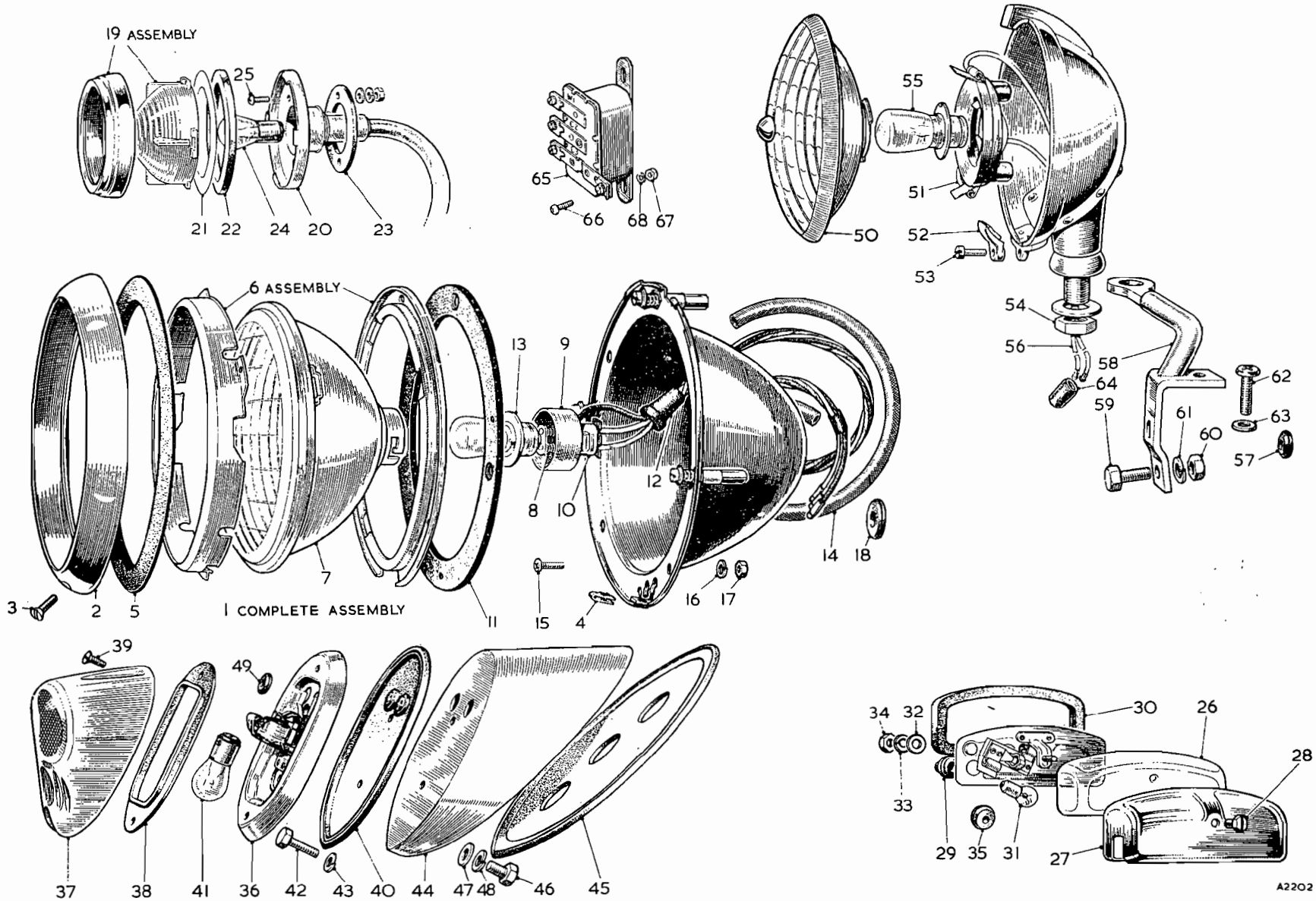
19 ASSEMBLY
25
21 22 24 20 23
65
66 68 67
55
51
50
52
53
54
56
58
64
59
61
60
62
63
57
6 ASSEMBLY
13 9
12
8 10
14 18
3
2 5
1 COMPLETE ASSEMBLY
7
11
15
4
16 17
39
49
37 38 41 36 42 43 40 44 47 48 46 45
34 32
33
30 26
28
29 35 31 27
A2202

Item No.	DESCRIPTION	Commencing (C) 10101 Part Number	Illus. No.	Qty. per Vehicle RHD	Qty. per Vehicle LHD	Unit of Issue	Type of Vehicle	MODIFICATIONS New Part Number	MODIFICATIONS Change Point	MODIFICATIONS Amdt. No.	REMARKS
	LAMPS (ROAD)										
1	**Headlamp—left dip**	**47H5365**	**NC1**	2							**Except Europe**
2	**Headlamp—right dip (Not U.K.)**	**17H5543**			2						**Except Europe and France**
3	**Headlamp—vertical dip (Not U.K.)**	**3H2520**		2	2			**BCA4302**	**Com. (C) 58918**		**Europe except France**
4	**Headlamp (less bulb) (FRANCE)**	**17H5330**			2				**Fin. (C) 60339**		
5	**Headlamp (FRANCE)**				2			**BCA4303**	**Com. (C) 60340**		
6	**Rim assembly**	**17H5147**	**NC2**	2	2						
7	Screw—rim fixing	17H5144	NC3	2	2			AJA5081	Com. (C) 58918		
8	Nut for screw		NC4	2	2			27H5354			
9	Excluder—dust	3H2962	NC5	2	2						
10	Rim and base assembly (inner)	17H5205	NC6	2	2						
11	**Light unit—left dip**	**7H5483**	**NC7**	2							
12	**Light unit—right dip**	**17H5375**			2						
13	**Light unit—vertical dip**	**7H5485**		2	2			**47H5124**	**Com. (C) 58918**		
14	Spring—bulb retaining		NC8	2	2			47H5125			
15	**Light unit (FRANCE)**	**7H5486**			2			**47H5124**	**Com. (C) 60340**		
16	Spring—bulb retaining				2			47H5125			
17	**Back-shell assembly (FRANCE)**	**17H5146**			2						
18	Bulb holder (FRANCE)	7H5062			2				Fin. (C) 60339		
19	Sleeve—terminal (FRANCE)	7H5582			6						
20	Bulb holder	17H5306	NC9	2	2						
21	Sleeve—terminal	7H5582	NC10	6	6						
22	Adaptor (complete with cables) (N. AMERICA)	17H5244			2						
23	Adaptor—conversion (N. AMERICA)	17H5546			2						
24	Adaptor with cable				2			47H5126	Com. (C) 58918		
25	Sleeve—terminal				6			7H5582			
26	Gasket—rubber	3H1031	NC11	2	2						
27	Sleeve—sealing	27H5253	NC12	6	6						
28	**Bulb—left dip**	**13H140**	**NC13**	2							
29	**Bulb—right dip**	**3H1893**			2						
30	**Bulb—vertical dip**	**3H921**		2	2			**13H138**	**Com. (C) 58918**		
31	**Bulb—yellow**				2			**13H139**	**Com. (C) 60340**		
32	P.V.C. tubing for headlamp leads	ACH5701	NC14	2	2						
33	Screw for headlamp to wing	PMZ0310	NC15	8	8						
34	Washer for screw (spring)	LWZ203	NC16	8	8						
35	Nut for screw—headlamp to wing	FNZ103	NC17	8	8						
36	Grommet for headlamp cables through front panel and radiator support	RFR110	NC18	3	3						
37	**Sidelamp (flasher)**	**ACC5292**		2	2						
38	Rim and glass	17H5428	NC19	2	2						
39	Body	AJH5151	NC20	2	2						
40	Washer (plastic)—sliding ring	17H5305	NC21	2	2						
41	Washer (rubber)—seating	17H5308	NC22	2	2						
42	Washer for lamp to wing	17H5309	NC23	2	2						
43	**Bulb**	**1F9026**	**NC24**	2	2						
44	Screw for lamp to wing	PMZ0206	NC25	6	6						

Item No.	DESCRIPTION	Commencing (C) 10101 Part Number	Illus. No.	Qty. per Vehicle RHD	Qty. per Vehicle LHD	Unit of Issue	Type of Vehicle	MODIFICATIONS New Part Number	MODIFICATIONS Change Point	MODIFICATIONS Amdt. No.	REMARKS
	Lamps (Road)—*continued*										
1	**Number-plate lamp**	**3H1813**		1	1						
2	Window	7H5121	NC26	1	1						
3	Cover	7H5185	NC27	1	1						
4	Sundry parts	7H5123	NC28	1 set	1 set	1					
5	Grommet	7H5164	NC29	1	1						
6	Joint	7H5122	NC30	1	1						
7	**Bulb**	**2H4817**	**NC31**	1	1						
8	Washer—plain	PWZ103	NC32	2	2						
9	Washer—spring	LWZ203	NC33	2	2						
10	Nut	AJD8012Z	NC34	2	2						
11	Grommet for number-plate lamp cable	RFR104	NC35	1	1						
12	**Tail lamp (flasher)**	**13H23**		2	2						
13	Rim	AJA5072	NC36	2	2						
14	Glass	AJA5069	NC37	2	2						
15	Seating rubber	AJA5071	NC38	2	2						
16	Screw	AJA5070	NC39	4	4						
17	Seating rubber for lamp	AJA5073	NC40	2	2						
18	**Bulb**	**1F9026**	**NC41**	2	2						
19	Screw for tail lamp to plinth	PMZ0308	NC42	4	4						
20	Washer for screw (spring)	LWZ203	NC43	4	4						
21	Plinth for tail lamp—R/H (primed)	AHH5392	NC44	1	1						
22	Plinth for tail lamp—L/H (primed)	AHH5393		1	1						
23	Seal for tail lamp plinth	AHH5505	NC45	2	2						
24	Seal for tail lamp plinth	AHH5505	NC45	2	2						
25	Screw for plinth to rear wing	HZS0405	NC46	4	4						
26	Washer for screw (plain)	PWZ204	NC47	4	4						
27	Washer for screw (spring)	LWZ204	NC48	4	4						
28	Grommet for tail lamp cables	RFR104	NC49	2	2						
29	**Fog lamp**	**ADH785**		2	2						
30	Light unit	ACG5179	NC50	2	2						Optional extras
31	Adaptor assembly	ACG5180	NC51	2	2						
32	Catch—rim	AJH5057	NC52	2	2						
33	Screw—catch	17H5400	NC53	2	2						
34	Nut—lamp spigot	17H5401	NC54	2	2						
35	**Bulb**	**1F9034**	**NC55**	2	2						
36	Lead—fog lamp (3′ 9″)	AHH5454	NC56	2							
37	Lead—fog lamp (1′ 3″)	AHH5541		2	2						
38	Grommet—fog lamp lead	RFR103	NC57	4	4						

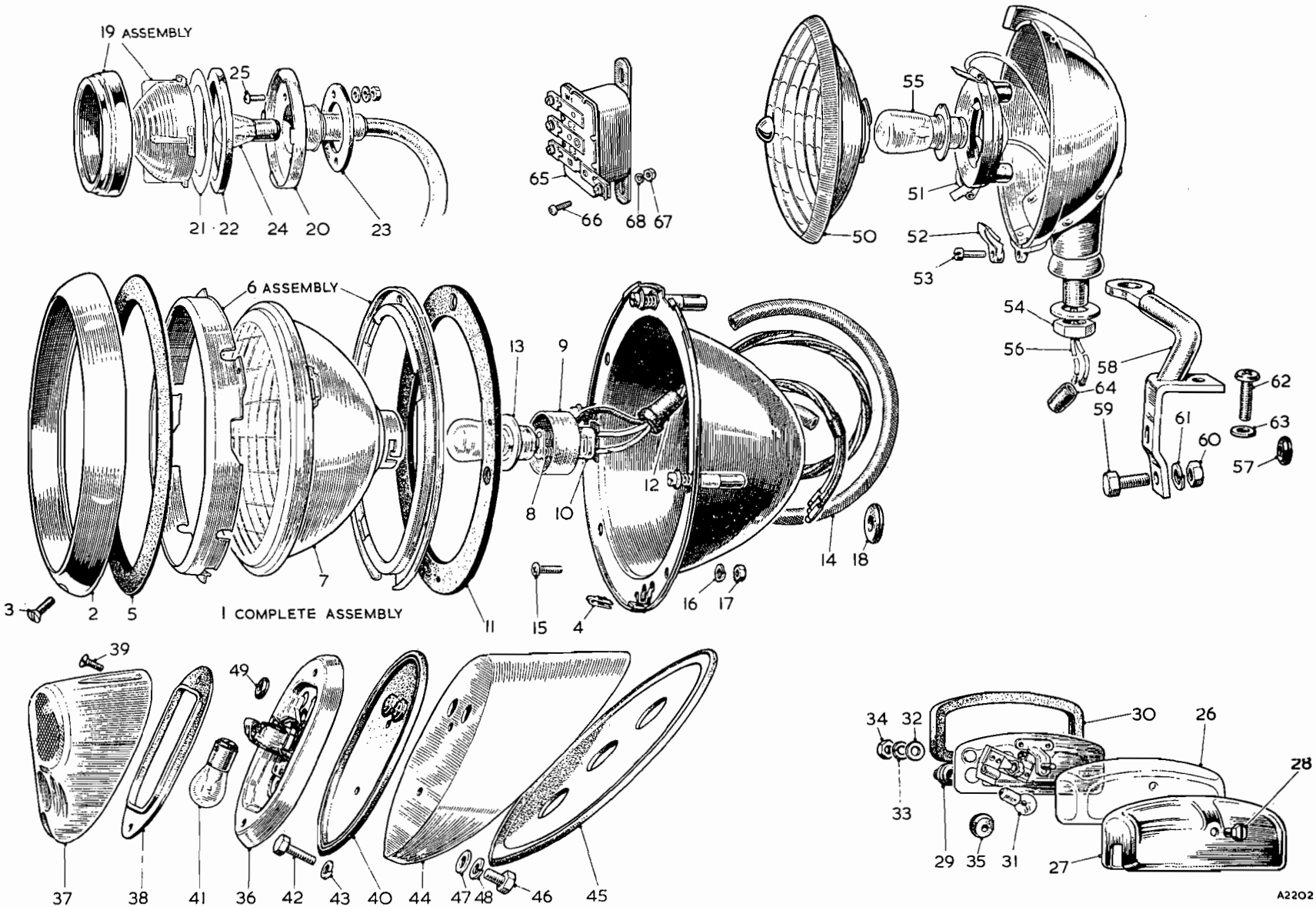

To face page N.6

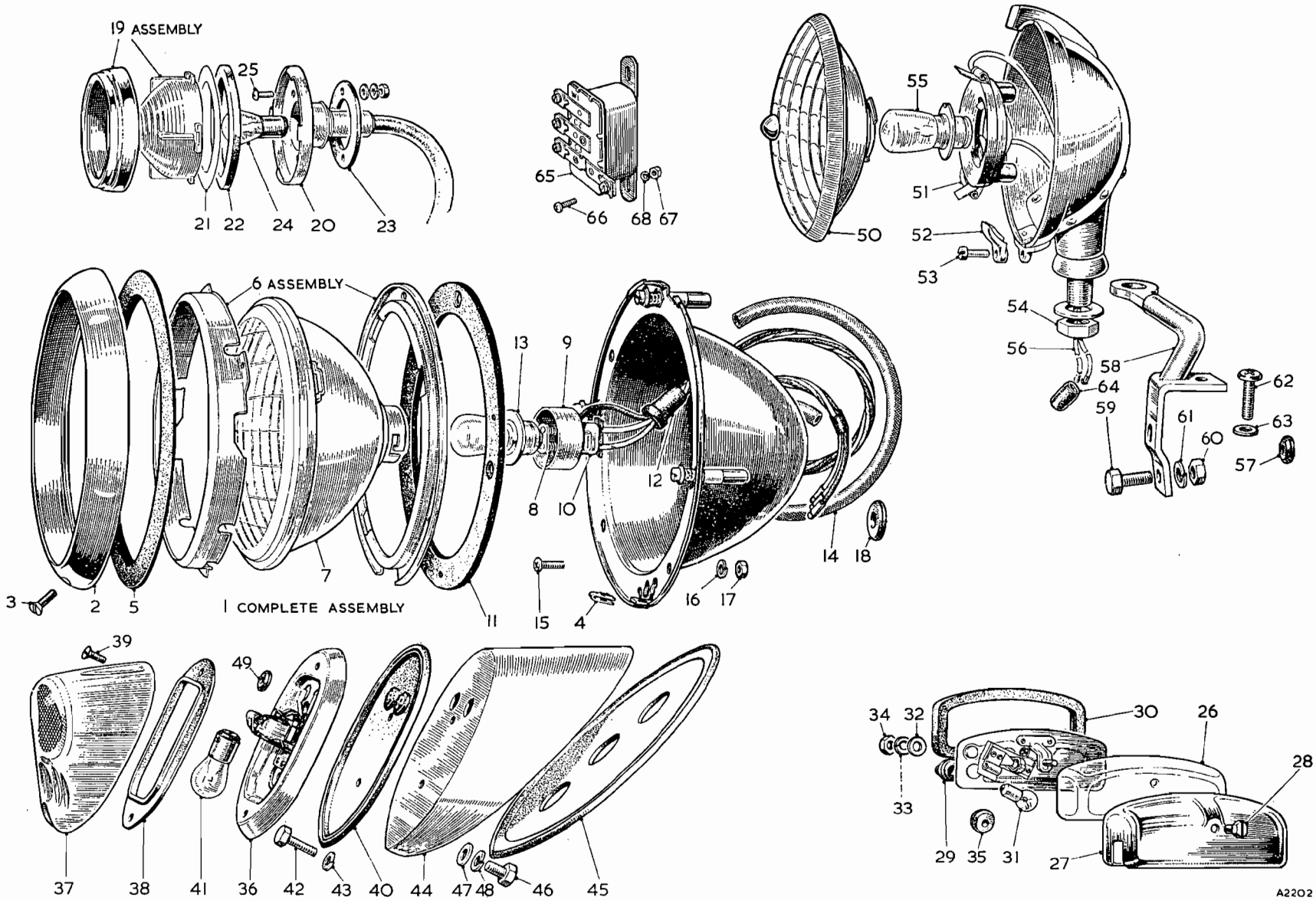
19 ASSEMBLY
25
21 22 24 20 23
65
66 68 67
55
51
50
52
53
54
56
58
64
59
61
60
62
63
57
6 ASSEMBLY
13
9
8 10
12
14 18
3
2 5
1 COMPLETE ASSEMBLY
7
11
15
4
16 17
39
49
37 38 41 36 42 43 40 44 47 48 46 45
34 32
33
30
26
28
29 35 31
27
A2202

Item No.	DESCRIPTION	Commencing (C) 10101 Part Number	Illus. No.	Qty. per Vehicle RHD	Qty. per Vehicle LHD	Unit of Issue	Type of Vehicle	MODIFICATIONS New Part Number	MODIFICATIONS Change Point	MODIFICATIONS Amdt. No.	REMARKS
	Lamps (Road)—*continued*										
1	**Bracket—R/H fog lamp**	**AHH5521**	**NC58**	1	1						Optional extras
2	**Bracket—L/H fog lamp**	**AHH5520**		1	1						
3	Screw—bracket to bumper blade (lower)	HZS0506	NC59	2	2						
4	Nut for screw	FNZ105	NC60	2	2						
5	Washer for nut (spring)	LWZ205	NC61	2	2	24					
6	Screw—bracket to bumper blade (top)	PMP0518	NC62	2	2						
7	Washer for screw (plain)	PWP105	NC63	2	2						
8	Connector	2H2617	NC64	3	3						
9	**Relay—fog lamp (N. AMERICA)**		**NC65**		1			**BHA4075**			
10	Harness—fog lamp relay (N. AMERICA)				1			AHH5758			
11	Screw—relay to bulkhead		NC66		2			PMZ0308	Com. (C) 55633		
12	Nut for screw		NC67		2			FNZ103			
13	Washer for nut (spring)		NC68		2			LWZ203			

Item No.	DESCRIPTION	Commencing (C) 10101 Part Number	Illus. No.	Qty. per Vehicle RHD	LHD	Unit of Issue	Type of Vehicle	MODIFICATIONS New Part Number	Change Point	Amdt. No.	REMARKS
	FLASHER—HORN										
1	**Flasher unit**	**11G9093**	**ND1**	1	1						
2	Screw for flasher unit to dash	PMZ0508	ND2	2	2						
3	Washer for screw (spring)	LWZ205	ND3	2	2	24					
4	Nut for screw—flasher unit to dash	FNZ105	ND4	2	2						
5	**Unit—relay—flasher lights**	**3H1454**	**ND5**	1	1						
6	Screw for relay unit to dash	PMZ0408	ND6	2	2						
7	Washer for screw (spring)	LWZ204	ND7	2	2						
8	Nut for screw—relay unit to dash	FNZ104	ND8	2	2						
9	**Horn—low note**	**1B9007**	**ND9**	1	1						
10	Bracket—horn	135448	ND10	1	1						
11	Screw—horn bracket to R/H front extension	HZS0505	ND11	2	2						
12	Nut for screw	FNZ105	ND12	2	2						
13	Washer for nut (spring)	LWZ205	ND13	2	2	24					
14	Screw—horn to bracket	HZS0407	ND14	2	2						
15	Nut for screw	FNZ104	ND15	2	2						
16	Washer for nut (spring)	LWZ204	ND16	2	2						
17	Grommet—horn	ADG1517		1	1						
18	**Horn—high note**	**1B9008**		1	1						Optional extras
19	Bracket—L/H horn	135761		1	1						
20	Screw—horn bracket to L/H front extension	HZS0505		2	2						
21	Nut for screw	FNZ105		2	2						
22	Washer for nut (spring)	LWZ205		2	2	24					
23	Screw—horn to bracket	HZS0407		2	2						
24	Nut for screw	FNZ104		2	2						
25	Washer for nut (spring)	LWZ204		2	2						
26	Harness—horn	AHH5453		1	1						
27	Strap—horn harness	AHH5506		2	2						
28	Grommet—horn	ADG1517		1	1						

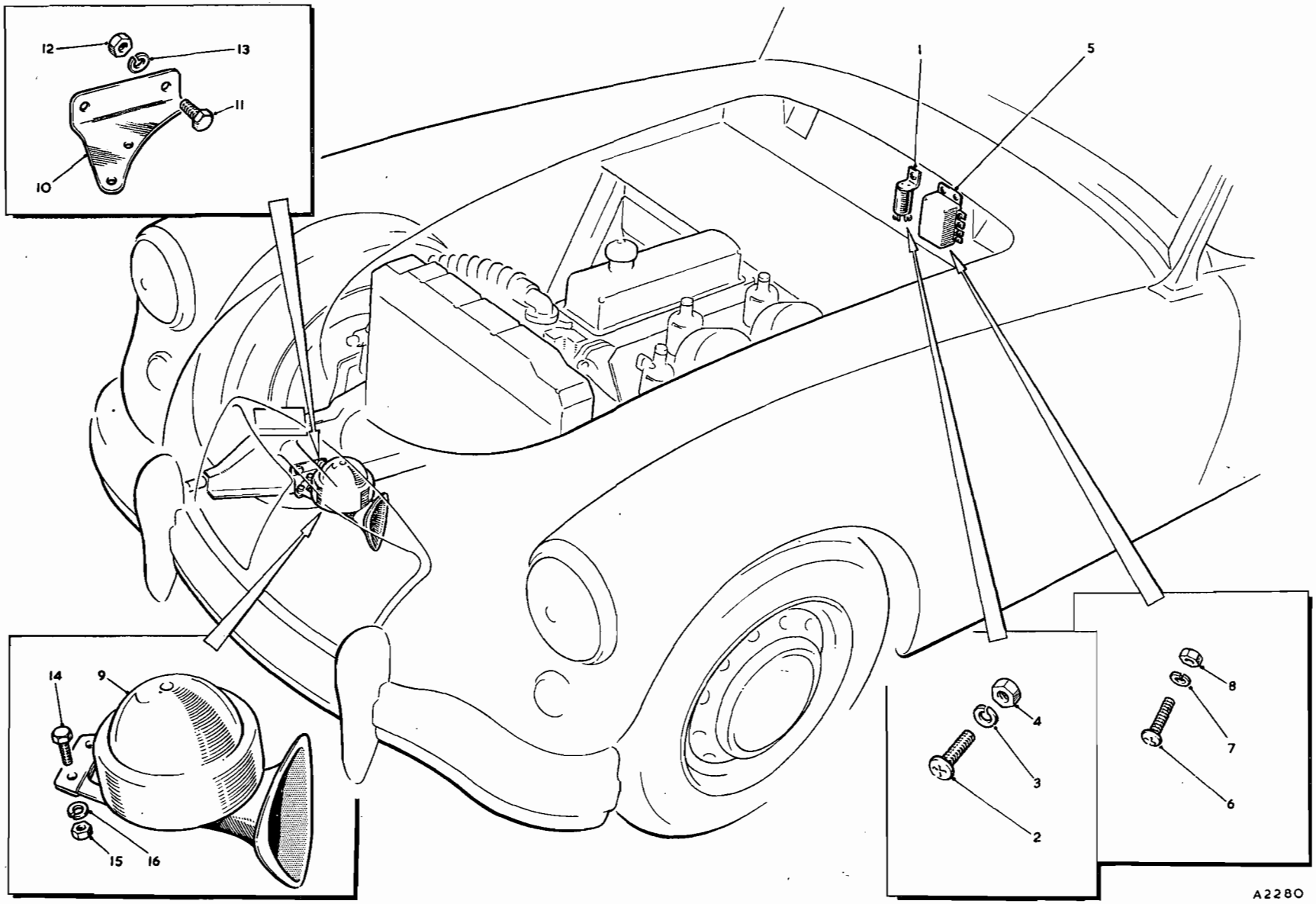

To face page N.8

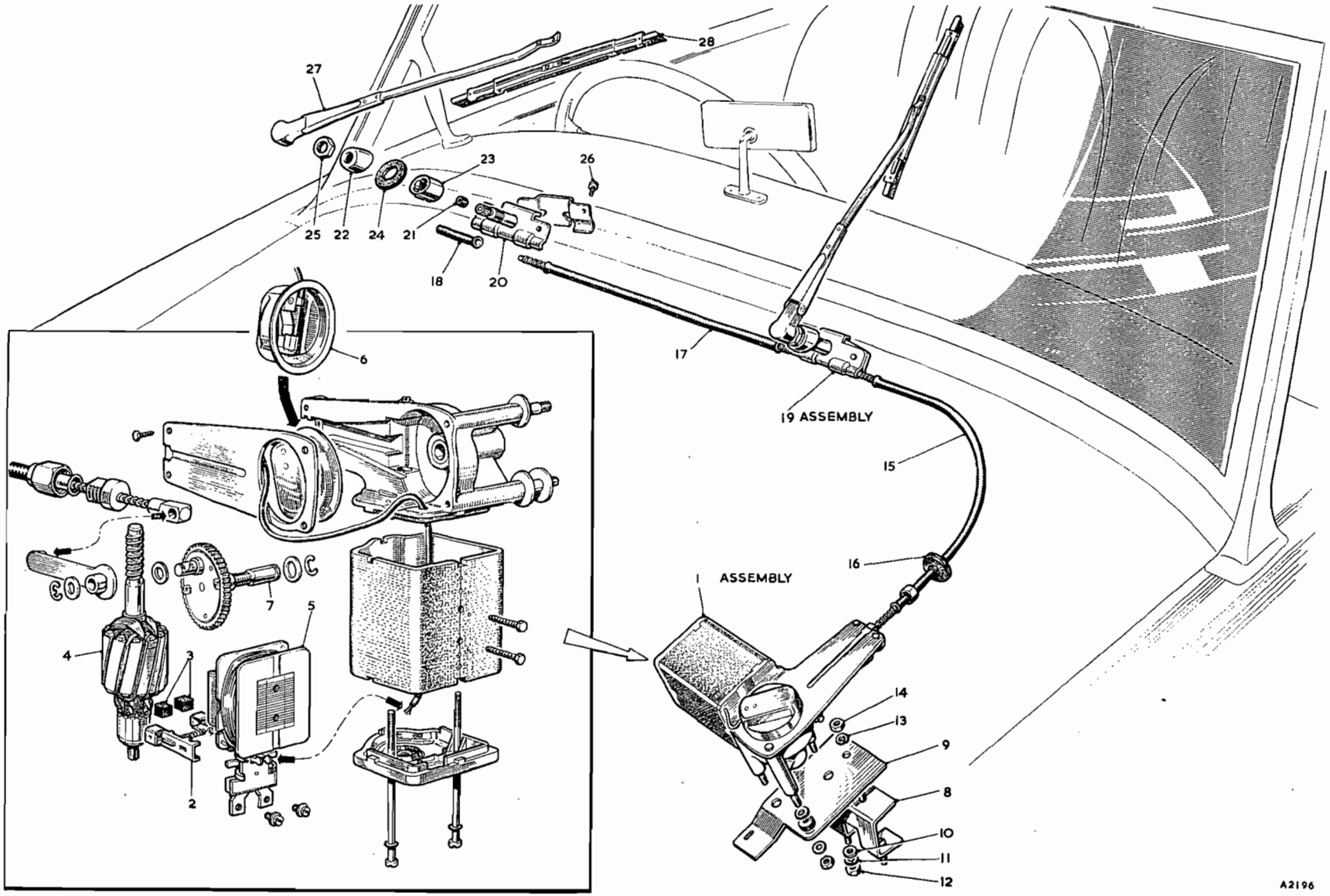

To face page N.9

	DESCRIPTION	Commencing (C) 10101 Part Number	Illus. No.	Qty. per Vehicle RHD	Qty. per Vehicle LHD	Unit of Issue	Type of Vehicle	MODIFICATIONS New Part Number	MODIFICATIONS Change Point	MODIFICATIONS Amdt. No.	REMARKS
	WINDSCREEN WIPER										
1	**Motor—wiper**	**37H5308**	**NE1**	1	1						
2	Brush gear	17H5396	NE2	1 set	1 set	1					
3	Brushes	7H5130	NE3	1 set	1 set	1					
4	Armature	17H5255	NE4	1	1						
5	Field coils	17H5432	NE5	1 set	1 set	1					
6	Fixing parts	17H5431		1 set	1 set	1					
7	Switch—adjusting	17H5442	NE6	1	1						
8	Shaft and gear	37H5437	NE7	1	1						
9	Sundry parts	17H5441		1 set	1 set	1					
10	Bracket for wiper motor—lower	AHH5507	NE8	1	1						
11	Bracket for wiper motor—upper	AHH5508	NE9	1	1						
12	Washer for lower bracket (plain)	PWZ204	NE10	2	2						
13	Washer for lower bracket (spring)	LWZ203	NE11	2	2						
14	Nut for lower bracket to bulkhead	FNZ103	NE12	2	2						
15	Washer for upper bracket (spring)	LWZ204	NE13	1	1						
16	Nut for upper bracket to lower bracket	FNZ104	NE14	1	1						
17	Outer casing—wheelbox to motor	AHH5410	NE15	1	1						
18	Grommet	8D5768	NE16	1	1						
19	Outer casing—wheelbox to wheelbox	AHH5411	NE17	1	1						
20	Outer casing—short end	14G3722	NE18	1	1						
21	**Wheelbox assembly**	**14B5588**	**NE19**	2	2						
22	Spindle and gear	17H5388	NE20	2	2						
23	Tube for spindle (rubber)	17H5389	NE21	2	2						
24	Bush—front	ADB826	NE22	2	2						
25	Bush—rear	AHH5414	NE23	2	2						
26	Washer—rubber	ADC560	NE24	2	2						
27	Nut	185925	NE25	2	2						
28	Screw—cover	17H5390	NE26	4	4						
29	Cross-head and rack assembly	37H5169		1	1						
30	**Arm—wiper**	**AHH5419**	**NE27**	2				**17H5513**	**Com. (C) 13612**		
31	**Arm—wiper**	**AHH5421**			2			**17H5514**	**Com. (C) 12800**		
32	**Blade—wiper**	**AHH5417**	**NE28**	2	2			**17H5512**			

Item No.	DESCRIPTION	Commencing (C) 10101 Part Number	Illus. No.	Qty. per Vehicle RHD	Qty. per Vehicle LHD	Unit of Issue	Type of Vehicle	MODIFICATIONS New Part Number	MODIFICATIONS Change Point	MODIFICATIONS Amdt. No.	REMARKS
	CABLES AND CONNECTIONS										
1	**Harness—main forward**	**37H5056**		1	1						**Prior to (C) 13473 supply also 1 off 37H5057 lead**
2	Lead—flasher and headlamp—L/H			1	1			37H5057	Com. (C) 13473		
3	**Harness—chassis**	**AHH5444**		1	1						
4	**Harness—panel**	**AHH5445**		1	1						
5	**Harness—tail lamp**	**AHH5446**		1	1						
6	Cable—coil to distributor	AHH5447		1	1						
7	Cable—positive battery to earth	AHH5448		1	1						
8	Cable—negative battery to starter switch	AHH5449		1	1						
9	Link for battery—positive to negative	AHH5450		1	1						
10	Cable—starter switch to starter	AHH5451		1	1			BHA4133	Com. (C) 63435		
11	Strip—engine to earth	AHH5452		1	1						
12	Clip—main harness—dash to body bolt	PCR1011		1	1						
13	Clip—main harness to bulkhead	PCR1007		2	2						
14	Screw for main harness clip to bulkhead—short	PMZ0306		2	2						
15	Screw for main harness clip to bulkhead—long	PMZ0314		1	1						
16	Washer for screw (spring)	LWZ203		2	2						
17	Nut for main harness clip screw	FNZ103		2	2						
18	Clip—dash wiring loom (rubber)	ACH8979		2	2						
19	Clip—main harness to wing bolts	PCR0811		2	2						
20	Clip—cable to rear number-plate bracket	PCR0311		1	1						
21	Nut for clips to wing bolt	FNZ105		3	3						
22	Washer (spring)	LWZ205		3	3	24					
23	Clip—head and sidelamp cable to wing bolt	PCR0811		2	2						
24	Clip—headlamp cable to front panel	PCR0607		3	3						
25	Screw for clip to front panel	PMZ0308		3	3						
26	Washer for screw (spring)	LWZ203		3	3						
27	Nut for clip screw	FNZ103		3	3						
28	Clip for dynamo cable to starter cable (rubber)	ACH8979		1	1						
29	Cable—petrol pump to earth	ADH2611		1	1						
30	Nut for petrol pump to earth cable	FNZ104		1	1						
31	Washer (spring)	LWZ204		1	1						
32	Screw—battery earth cable	HZS0504		1	1						
33	Washer for screw (spring)	LWZ205		1	1	24					
34	Nut for earth cable screw	FNZ105		1	1						
35	Clip for negative cable to starter switch	PCR0709		1	1						
36	Locknut to ramp screw clip	FNZ204		1	1						
37	Washer for ramp screw	LWZ204		1	1						
38	Clip for tail lamp harness to side-member	PCR0407		2	2						
39	Screw for clip	PMZ0306		2	2						
40	Harness—headlamp flasher switch extension **(N. AMERICA)**	BHA4117			1						Optional extra

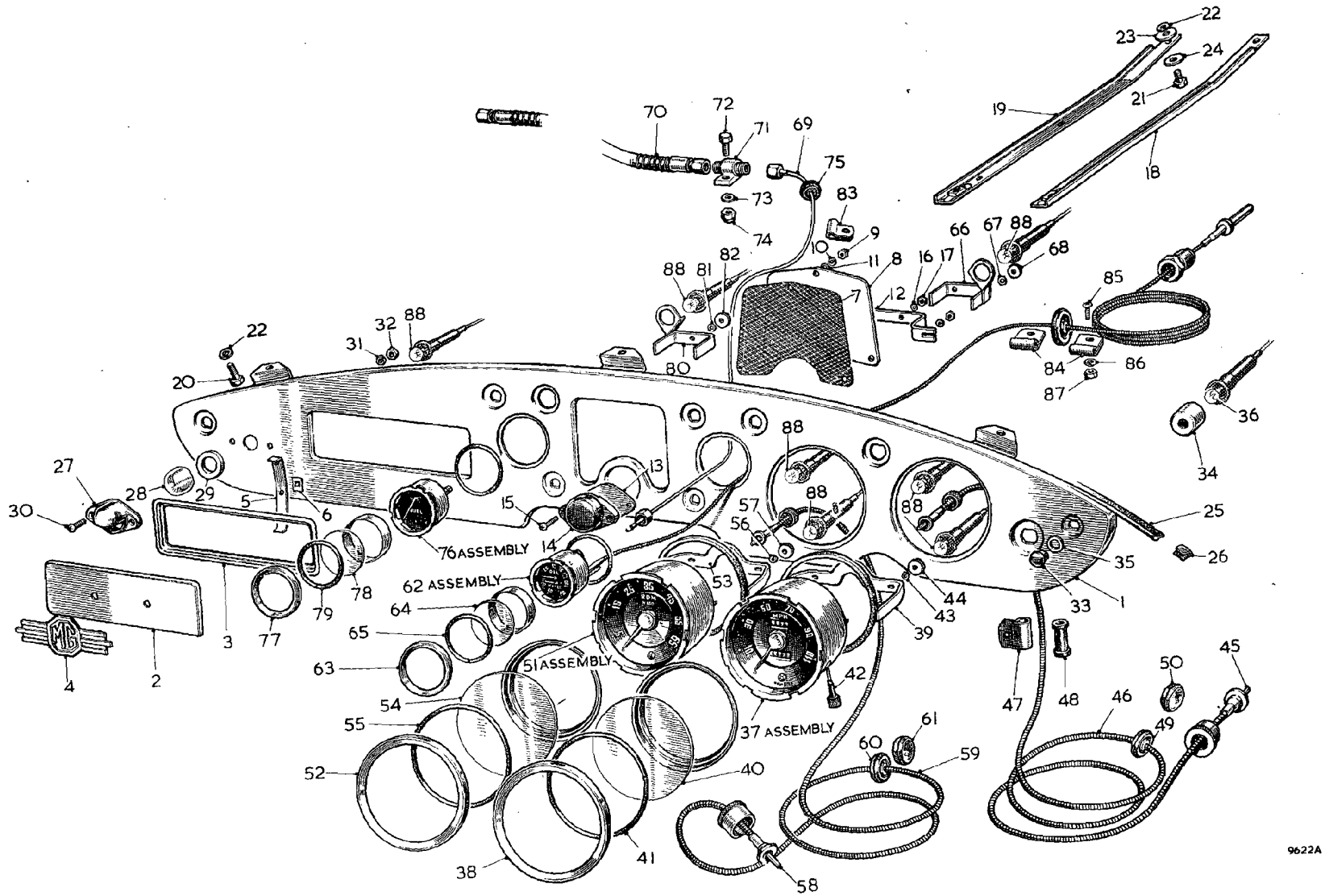

To face page 0.1

Item No.	DESCRIPTION	Commencing (C) 10101		Qty. per Vehicle		Unit of Issue	Type of Vehicle	MODIFICATIONS			REMARKS
		Part Number	Illus. No.	RHD	LHD			New Part Number	Change Point	Amdt. No.	
	FASCIA PANEL AND INSTRUMENTS										
1	**Fascia panel**	**ARH57**	**01**	**1**			**Tourer**				
2	**Fascia panel**	**ARH58**			**1**						
3	Blanking plate for radio aperture	ARH59	O2	1	1						
4	Bezel—radio aperture	AHH5255	O3	1	1						
5	Motif—'M.G.'	AHH5258	O4	1	1						
6	Clip—blanking plate to fascia panel	AHH5256	O5	2	2						
7	Spire nut—clip	ADB509	O6	2	2						
8	Grille—radio speaker	AHH5254	O7	1	1						
9	Blanking plate for speaker grille	AHH5376	O8	1	1						
10	Nut for grille blanking plate to panel	FNZ103	O9	3	3						
11	Washer (spring)	LWZ203	O10	3	3						
12	Washer (plain)	PWZ103	O11	3	3						
13	Bracket for horn-push	AHH5287	O12	1	1						
14	Insulating piece for horn-push	AHH5257	O13	1	1						
15	**Push—horn**	**2H3383**	**O14**	**1**	**1**						
16	Screw for push to bracket	PMZ0210	O15	2	2						
17	Washer for screw (spring)	LWZ202	O16	2	2						
18	Nut for horn-push screw	CNZ102	O17	2	2						
19	Support angle assembly—R/H—fascia	AFH1712	O18	2	2						
20	Support angle assembly—L/H—fascia	AFH1713	O19	2	2						
21	Set screw for fascia panel fixing	AFH2587	O20	3	3						
22	Set screw for support angle	PPZ0308	O21	4	4						
23	Washer for set screw (spring)	LWZ203	O22	7	7						
24	Washer for set screw (plain)	PWZ204	O23	3	3						
25	Washer for set screw (plain)	PWZ203	O24	4	4						
26	**Piping—Red**	**AFH1837**	**025**	**A/R**	**A/R**			**AFH4841**	**Com. (C) 17220**		**State length**
27	**Piping—Green**	**AFH1838**		**A/R**	**A/R**			**AFH4842**			
28	**Piping—Grey**	**AFH1839**		**A/R**	**A/R**			**AFH4843**			
29	**Piping—Off White**	**AFH1840**		**A/R**	**A/R**			**AFH4844**			
30	Clip for fascia piping	ADA833	O26	8	8						
31	**Cover—map light**	**37H5426**	**027**	**1**	**1**						
32	Glass for map light	17H5301	O28	1	1						
33	Rubber for map light glass	17H5302	O29	1	1						
34	Screw for map lamp to fascia panel	RMP0310	O30	2	2						
35	Washer for screw (spring)	LWZ203	O31	2	2						
36	Nut for map lamp to fascia screw	FNZ103	O32	2	2						
37	Flasher warning light	AHH5370	O36	1	1						
38	Bulb	2H4732		1	1						
39	Bulb holder	37H5181		1	1						
40	Sleeve (rubber)	3H999		1	1						
41	Shade	AJG5047	O34	1	1						
42	Window (green)	AJG5046	O33	1	1						
43	Bezel (chrome)	184166	O35	1	1						

Item No.	DESCRIPTION	Commencing (C) 10101 Part Number	Illus. No.	Qty. per Vehicle RHD	Qty. per Vehicle LHD	Unit of Issue	Type of Vehicle	MODIFICATIONS New Part Number	MODIFICATIONS Change Point	MODIFICATIONS Amdt. No.	REMARKS
	Fascia Panel and Instruments—*continued*										
1	Speedometer (miles)	AHH5185	O37	1				17H292	Com. (C) 14090		
2	Speedometer (kilos)	AHH5186			1			17H293			
3	Bezel	27H397	O38	1	1						
4	Strap	AJH5176	O39	1	1						
5	Glass	AJH5177	O40	1	1						
6	Rubber ring	AJH5178	O41	1	1						
7	Trip knob	AJH5179	O42	1	1						
8	Washer (spring)	27H387	O43	2	2						
9	Nut—knurled	17H932	O44	2	2						
10	Cable—speedometer (5′ 3″)	AHH5292		1	1			27H1393	Com. (C) 17588		
11	Cable—inner	7H1694	O45	1	1			17H1346	Fin. (C) (LHD) 61503		
12	Cable—outer	17H221	O46	1	1			27H1391			
13	Cable—speedometer (5′ 6″)				1			ACC8788			
14	Cable—inner				1			17H756	Com. (C) 61504		
15	Cable—outer				1			17H757			
16	Clip for cable to dash	PCR0709	O47	1	1						
17	Rubber sleeve for clip	ACH8529	O48	1	1						
18	Washer (spring)	LWZ204		1	1						
19	Nut for speedometer clip R/H toeboard screw	FNZ104		1	1						
20	Grommet—cable through dash	ACB8474	O49	1	1						
21	Grommet—blanking—for cable hole in dash	4G2541	O50	1	1						
22	Revolution counter	AHH5187	O51	1	1			17H300	Com. (C) 14090		
23	Bezel	27H397	O52	1	1						
24	Strap	AJH5176	O53	1	1						
25	Glass	AJH5177	O54	1	1						
26	Rubber ring	AJH5178	O55	1	1						
27	Washer (spring)	27H387	O56	2	2						
28	Nut—knurled	17H932	O57	2	2						
29	Cable—revolution counter (4′ 0″)	AHH5353		1				1B9141			
30	Cable—inner	7H1695	O58	1				17H630			
31	Cable—outer	17H220	O59	1				17H1343	Com. (C) 17588		
32	Cable—revolution counter (3′ 2″)	AHH5354			1			27H1801			
33	Cable—inner	17H218			1			27H1860			
34	Cable—outer	17H219			1			27H1861			
35	Grommet—cable through dash	ACB8474	O60	1	1						
36	Grommet—blanking—for cable hole in dash	4G2541	O61	1	1						

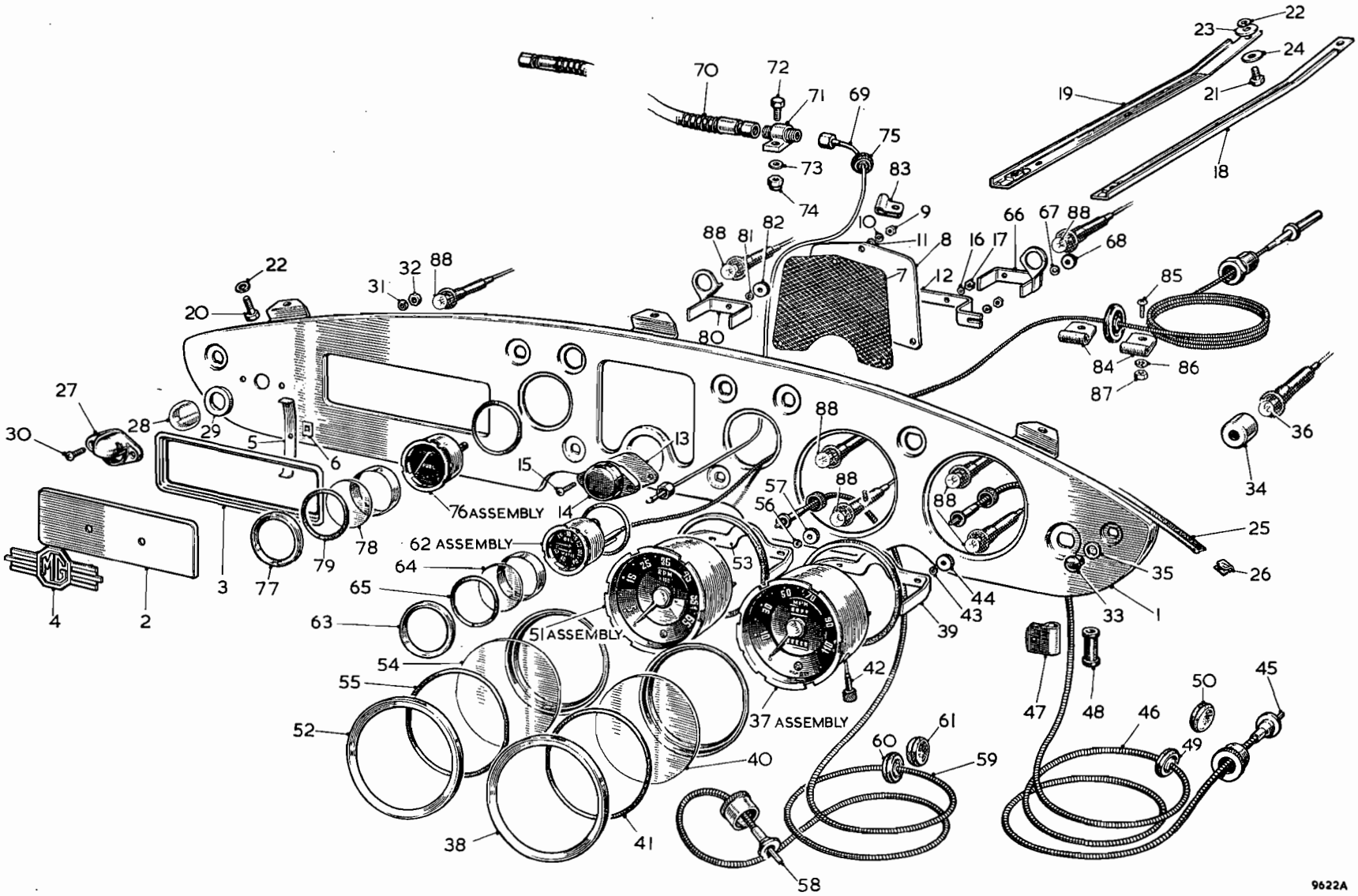

To face page 0.2

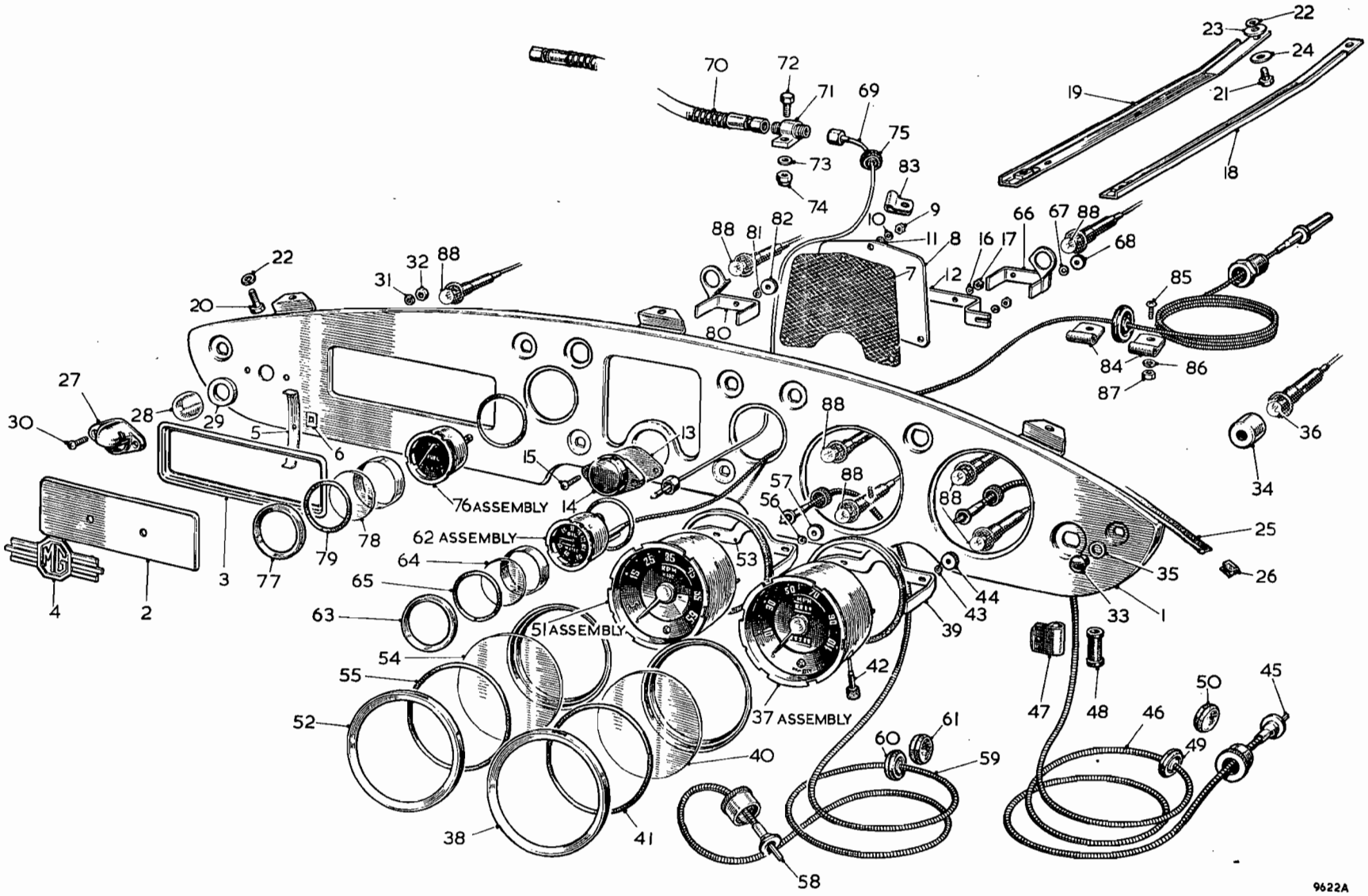

To face page 0.3

Item No.	DESCRIPTION	Commencing (C) 10101 Part Number	Illus. No.	Qty. per Vehicle RHD	Qty. per Vehicle LHD	Unit of Issue	Type of Vehicle	MODIFICATIONS New Part Number	MODIFICATIONS Change Point	MODIFICATIONS Amdt. No.	REMARKS
	Fascia Panel and Instruments—*continued*										
1	**Gauge—oil and temperature**	**AHH5188**	**O62**	**1**	**1**			**17H298**	**Com. (C) 14090**		
2	**Gauge—oil and temperature (Centigrade)**				**1**			**BHA4110**	**Com. (C) 57574**		
3	Bezel	AJH5182	O63	1	1						
4	Glass	17H1068	O64	1	1						
5	Rubber ring	17H1821	O65	1	1						
6	Rubber ring				1			27H972	] Com. (C) 57574		] Centigrade gauge
7	Strip—window				1			17H1481	]		
8	Strap	AJH5186	O66	1	1						
9	Washer (spring)	27H387	O67	2	2						
10	Nut—knurled	17H932	O68	2	2						
11	Pipe assembly for oil gauge—with nuts and nipples	AHH5323	O69	1	1						
12	Pipe—flexible—for connector to engine	83866	O70	1	1						
13	Connector for oil gauge pipes	83875	O71	1	1						
14	Screw for oil pipe connector to starter bracket	HZS0406	O72	1	1						
15	Washer for connector screw	PWZ104	O73	1	1						
16	Nut for connector screw	LNZ104	O74	1	1						
17	Grommet for oil gauge pipe	84138	O75	1	1						
18	**Gauge—fuel**	**AHH5189**	**O76**	**1**	**1**			**17H299**	**Com. (C) 14090**		
19	Bezel	AJH5182	O77	1	1						
20	Glass	17H1068	O78	1	1						
21	Rubber ring	17H1821	O79	1	1						
22	Strap	AJH5185	O80	1	1						
23	Washer (spring)	27H387	O81	1	1						
24	Nut—knurled	17H932	O82	1	1						
25	Clip for oil gauge pipe to dash bulkhead—front	PCR0207	O83	1	1						
26	Clip for oil gauge pipe to dash bulkhead—rear	PCR0207		1	1						
27	Clip for thermometer pipe to dash bulkhead—front and rear	PCR0307	O84	3	3						
28	Screw for oil and thermometer pipe clips	PMZ0307	O85	2	2						
29	Washer for screw (spring)	LWZ203	O86	3	3						
30	Nut for pipe clip screw	FNZ103	O87	3	3						
31	Clip for thermometer pipe			1	1			BHA4081	] Com. (C) 49148		
32	Clip retainer			1	1			AHH5802	]		
33	**Bulb for panel and warning lights**	**2H4732**	**O88**	**7**	**7**						
34	Bulb holder—speedometer, revolution counter, and map light	37H5181		4	4						
35	Bulb holder—fuel gauge and oil and temperature gauge	3H914		2	2						
36	Bulb holder—ignition warning light	47H5166		1	1						

Item No.	DESCRIPTION	Commencing (C) 20671 Part Number	Illus. No.	Qty. per Vehicle RHD	Qty. per Vehicle LHD	Unit of Issue	Type of Vehicle	MODIFICATIONS New Part Number	MODIFICATIONS Change Point	MODIFICATIONS Amdt. No.	REMARKS
	Fascia Panel and Instruments—*continued*										
1	Fascia panel assembly (primed)	AFH4514		1			]				
2	Fascia panel assembly (primed)	AFH4515			1		]				
3	Bezel for radio speaker aperture	AFH4520		1	1		]				
4	Finisher for fascia panel—lower	AFH4488		1			]				
5	Finisher for fascia panel—lower	AFH4489			1		]				
6	Rivet for finisher and radio bezel	AFH5453		23	23		Coupé				
7	Piping for fascia panel—Red	AFH4841		A/R	A/R		]				
8	Piping for fascia panel—Grey	AFH4843		A/R	A/R		]				
9	Piping for fascia panel—Green	AFH4842		A/R	A/R		]				
10	Piping for fascia panel—Blue	AFH4846		A/R	A/R		]				
11	Piping for fascia panel—Black	AFH4845		A/R	A/R		]				
12	Piping for fascia panel—White	AFH4844		A/R	A/R		]				

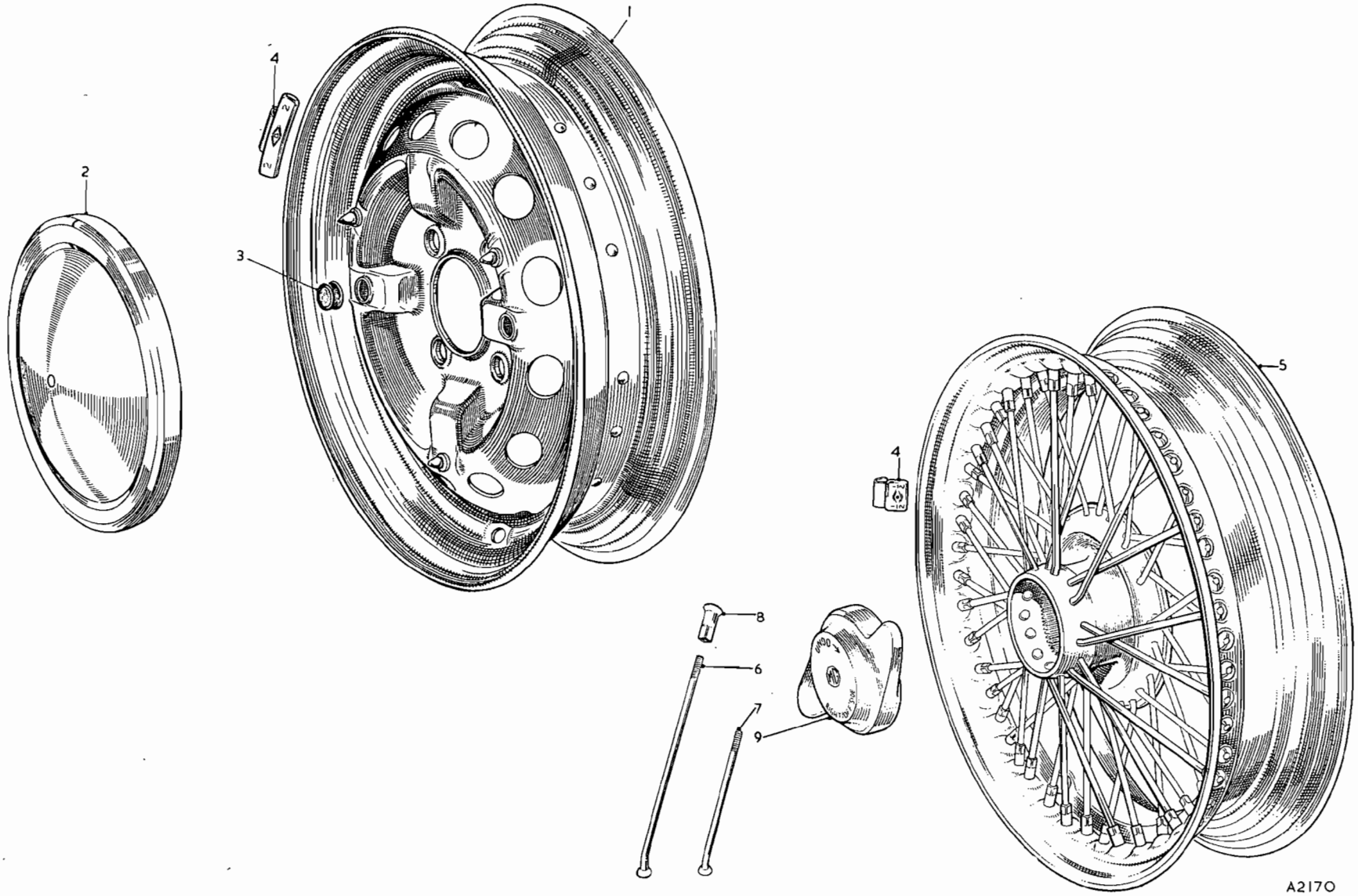

To face page P.1

ROAD WHEELS

Item No.	DESCRIPTION	Commencing (C) 10101 Part Number	Illus. No.	Qty. per Vehicle RHD	Qty. per Vehicle LHD	Unit of Issue	Type of Vehicle	MODIFICATIONS New Part Number	MODIFICATIONS Change Point	MODIFICATIONS Amdt. No.	REMARKS
1	**Wheel—disc**	**ACH8004**	**P1**	5	5			**AHH8010**	**Com. (C) 63577**		**Always use AHH8010**
2	Cover for disc wheel	ACA5221	P2	4	4	6					] Alternatives
3	Cover for disc wheel	ACH8304		4	4	6					
4	Rubber plug for road wheel	ACA5308	P3	8	8						
5	Weight—wheel balance—½ oz.	180603	P4	A/R	A/R						
6	Weight—wheel balance—1 oz.	180604		A/R	A/R						
7	Weight—wheel balance—1½ oz.	180605		A/R	A/R						
8	Weight—wheel balance—2 oz.	180606		A/R	A/R						
9	Rimbellisher	AHH8002		5	5				] Fin. (C) 63576		] Optional extras
10	Disc assembly—wheel—R/H (Ace Mercury)	97H676		2	2						
11	Disc assembly—wheel—L/H (Ace Mercury)	97H675		2	2						
12	**Wheel—wire**	**ACG8000**	**P5**	5	5						
13	Spoke—long	7H1805	P6	80	80						
14	Spoke—short	7H1806	P7	160	160						
15	Nipple for spoke	7H1709	P8	240	240						
16	Cap for wire wheel—R/H	81614	P9	2	2			ATB4222 1B8077	Com. (C) 40857 Com. (C) 48730		
17	Cap for wire wheel—L/H	81615		2	2			ATB4223 1B8078	Com. (C) 40857 Com. (C) 48730		
18	Cap for wire wheel—R/H **(GERMANY)**	AHH8008		2	2						
19	Cap for wire wheel—L/H **(GERMANY)**	AHH8009		2	2						

CHASSIS FRAME

Item No.	DESCRIPTION	Commencing (C) 10101 Part Number	Illus. No.	Qty. per Vehicle RHD	Qty. per Vehicle LHD	Unit of Issue	Type of Vehicle	MODIFICATIONS New Part Number	MODIFICATIONS Change Point	MODIFICATIONS Amdt. No.	REMARKS
1	**Chassis frame complete**	**AHH5002**	**Q1**	1	1						
2	**Toeboard support plate assembly**	**AHH5293**	**Q2**	1	1						
3	Screw for toeboard plate to goal-post	HPZ0406	Q3	9	9						
4	Washer for plate to post screw (plain)	PWZ104	Q4	9	9						
5	Washer for plate to post screw (spring)	LWZ204	Q5	9	9						
6	Cover-plate—R/H—goal-post	AHH5343		1	1						
7	Cover-plate—L/H—goal-post	AHH5344	Q6	1	1						
8	Felt—seal for cover-plate—lower	AHH5345	Q7	2	2						
9	Felt—seal for cover-plate—upper	AHH5346	Q8	2	2						
10	Screw for cover-plate to post (vertical)	CTZ803	Q9	6	6						
11	Screw for cover to post stay	PTZ1003	Q10	8	8						
12	Screw for cover-plate to goal-post stay (vertical)	PTZ1005	Q11	2	2						
13	Washer for screw (plain)	PWZ203	Q12	2	2						
14	**Front extension assembly**	**AHH5129**	**Q13**	1	1			**AHH5924**	**Com. (C) 66574**		
15	Screw for extension to frame bracket	HZS0606	Q14	8	8						
16	Nut for extension to frame bracket screw	FNZ106	Q15	8	8						
17	Washer for extension/frame screw (spring)	LWZ206	Q16	8	8						
18	**Bracket assembly—R/H—bumper support**	**AHH5139**		1	1						
19	**Bracket assembly—L/H—bumper support**	**AHH5140**	**Q17**	1	1						
20	Screw for bracket assembly to front extension	HNS0506	Q18	6	6						
21	Nut for bracket to front extension screw	FNZ105	Q19	6	6						
22	Washer for bracket to front extension screw (spring)	LWZ206	Q20	6	6						
23	Clip for tail lamp harness to side-member	PCR0407	Q21	2	2						
24	Screw for tail lamp harness clip	PMZ0306	Q22	2	2						
25	Nut for clip screw	FNZ103	Q23	2	2						
26	Washer for clip screw (spring)	LWZ203	Q24	2	2						
27	Nut for rebound strap spindle	FNZ106	Q25	2	2						
28	Washer for rebound strap spindle (plain)	PWZ206	Q26	2	2						
29	Washer for rebound strap spindle (spring)	LWZ206	Q27	2	2						
30	Strap for tail lamp cable to rear cross-member	AHH5506	Q28	2	2						
31	Clip for battery cable and harness	AHH5248	Q29	6	6						
32	Screw for clip to clip bracket on frame	PMZ0308	Q30	6	6						
33	Nut for clip to clip bracket on frame screw	FNZ103	Q31	6	6						
34	Washer for clip to clip bracket screw (spring)	LWZ203	Q32	6	6						

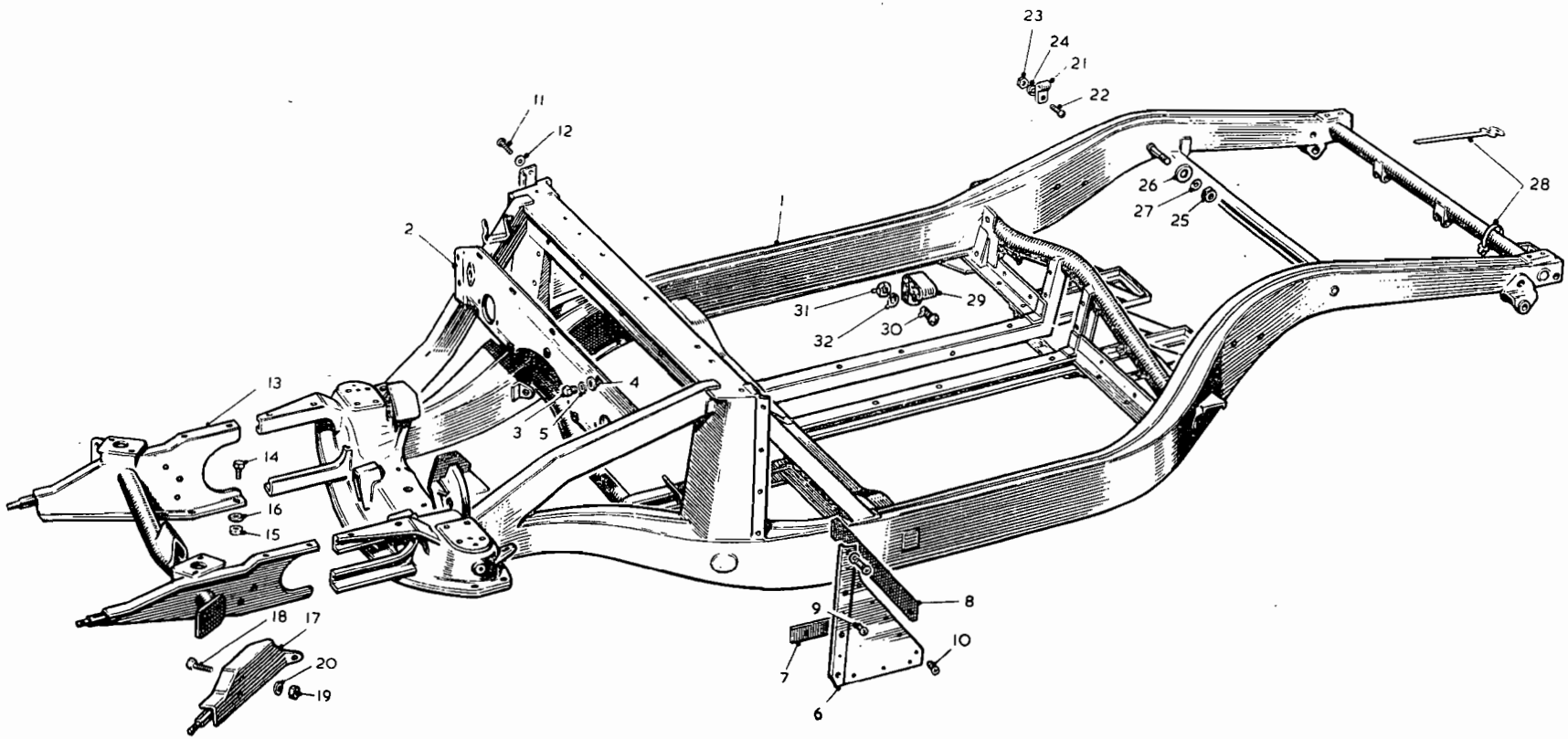

To face page Q.1

Item No.	DESCRIPTION	Commencing (C) 10101 Part Number	Illus. No.	Qty. per Vehicle RHD	Qty. per Vehicle LHD	Unit of Issue	Type of Vehicle	MODIFICATIONS New Part Number	MODIFICATIONS Change Point	MODIFICATIONS Amdt. No.	REMARKS
	BODY MOUNTING										
1	Packing—front extension support bracket	AHH5173		2	2						
2	Packing—front door post	AHH5174		2	2						
3	Packing—shut pillar body mounting bracket	AHH5175		2	2						
4	Packing—rear body mounting bracket	AHH5176		2	2						
5	Packing—cross-bar cover-plate	AHH5177		1	1						
6	Packing—frame goal-post upright (outer)	AHH5178		2	2						
7	Rubber sealing strip for body/front frame side (22″)	AHH5408		2	2						
8	Rubber sealing strip for body/rear frame side (37″)	AHH5409		2	2						
9	Screw for body	HPZ0508		10	10						
10	Washer for screw (plain)	PWZ205		10	10						
11	Washer for screw (spring)	LWZ205		10	10	24					
12	Screw for body to goal-post cross-bar	HPZ0506		3	3						
13	Screw for body to goal-post cross-bar end	HPZ0508		2	2						
14	Washer for screw (plain)	PWZ205		5	5						
15	Washer for screw (spring)	LWZ205		5	5	24					
16	Screw for body to shut pillar front/rear brackets	HPZ0508		8	8						
17	Screw for body to shut pillar	HPZ0510		2	2						
18	Washer for screw (spring)	LWZ205		10	10	24					
19	Washer for screw (plain—large)	PWZ205		10	10						
20	Washer for screw (plain—small)	PWZ105		8	8						
21	Nut for body to front/rear frame brackets	FNZ105		8	8						
22	Screw for body to 4th cross-member	HPZ0506		2	2						
23	Washer for screw (plain)	PWZ206		2	2						
24	Washer for screw (spring)	LWZ205		2	2	24					
25	Felt—bonnet sealing	AHH5458		1	1						
26	Rubber—sealing body to cross-bar	AHH5528		2	2						

Item No.	DESCRIPTION	Commencing (C) 10101 Part Number	Illus. No.	Qty. per Vehicle RHD	Qty. per Vehicle LHD	Unit of Issue	Type of Vehicle	MODIFICATIONS New Part Number	MODIFICATIONS Change Point	MODIFICATIONS Amdt. No.	REMARKS
	BODY ASSEMBLY										
1	**Body—painted and trimmed**	**AFH872**		1							
2	**Body—painted and trimmed**	**AFH873**			1		**Tourer**				
3	**Body—primed and trimmed**	**AFH2685**		1							
4	**Body—primed and trimmed**	**AFH2686**			1						
5	**Body—painted and trimmed**	**AFH3800**		1			**Coupé**				
6	**Body—painted and trimmed**	**AFH3801**			1						
	BODY SHELL										
7	**Shell—body**	**AFH2700**		1							
8	**Shell—body**	**AFH2701**			1						
9	**Front end assembly**	**AFH5484**		1	1						
10	Panel—bonnet surround	AFH1520	R1	1	1						
11	Front side assembly—R/H	AFH4894	R2	1	1						
12	Front side assembly—L/H	AFH4895	R3	1	1						
13	Bonnet surround reinforcement	AFH1521	R4	1	1						
14	Panel assembly—front bulkhead	AFH1524	R5	1	1						
15	Panel—radiator duct	AFH900	R6	1	1						
16	Box assembly—R/H air duct	AFH1502		1	1						
17	Box assembly—L/H air duct	AFH1503	R7	1	1						
18	Strip—front bulkhead packing	AFH1794	R8	1	1						
19	Tube—air duct	AFH1527	R9	2	2						
20	Panel—front valance	AFH1896	R10	1	1						
21	Screw fixing panel	AFH2587	R11	14	14						
22	Washer for screw (spring)	LWZ203	R12	14	14						
23	Washer for screw (plain)	PWZ203	R13	14	14						
24	Bracket—bonnet lock safety catch	AFH1767	R14	1	1						
25	Screw fixing bracket	AFH2587	R15	2	2		Tourer				
26	Washer for screw (spring)	LWZ203	R16	2	2						
27	Washer for screw (plain)	PWZ203	R17	2	2						
28	**Panel assembly—bonnet lid**	**AFH4880**	**R18**	1	1						
29	Safety catch assembly	14A366	R19	1	1						
30	Batten—bonnet lid stiffening	AFH2462	R20	1	1			AFH4879	Com. (C) 26681		
31	**Tonneau assembly**	**AFH1754**		1	1						
32	**Tonneau sub-assembly**	**AFH1870**		1	1						
33	Tonneau panel	AFH1871	R21	1	1						
34	**Floor assembly—boot**	**AFH1874**	**R22**	1	1						
35	Dzus spring	7H9828	R23	5	5						
36	Reinforcement assembly—tonneau	AFH1579	R24	1	1						
37	Panel assembly—rear bulkhead	AFH1585	R25	1	1						
38	**Panel assembly—battery cover**	**AFH1663**	**R26**	1	1						
39	Dzus fastener	7H9827	R27	5	5						
40	Screw fixing rear bulkhead panel	PMZ0308	R28	2	2						
41	Nut for screw	FNZ103	R29	2	2						
42	Washer for nut (spring)	LWZ203	R30	2	2						
43	**Lid assembly—boot**	**AFH1577**	**R31**	1	1						

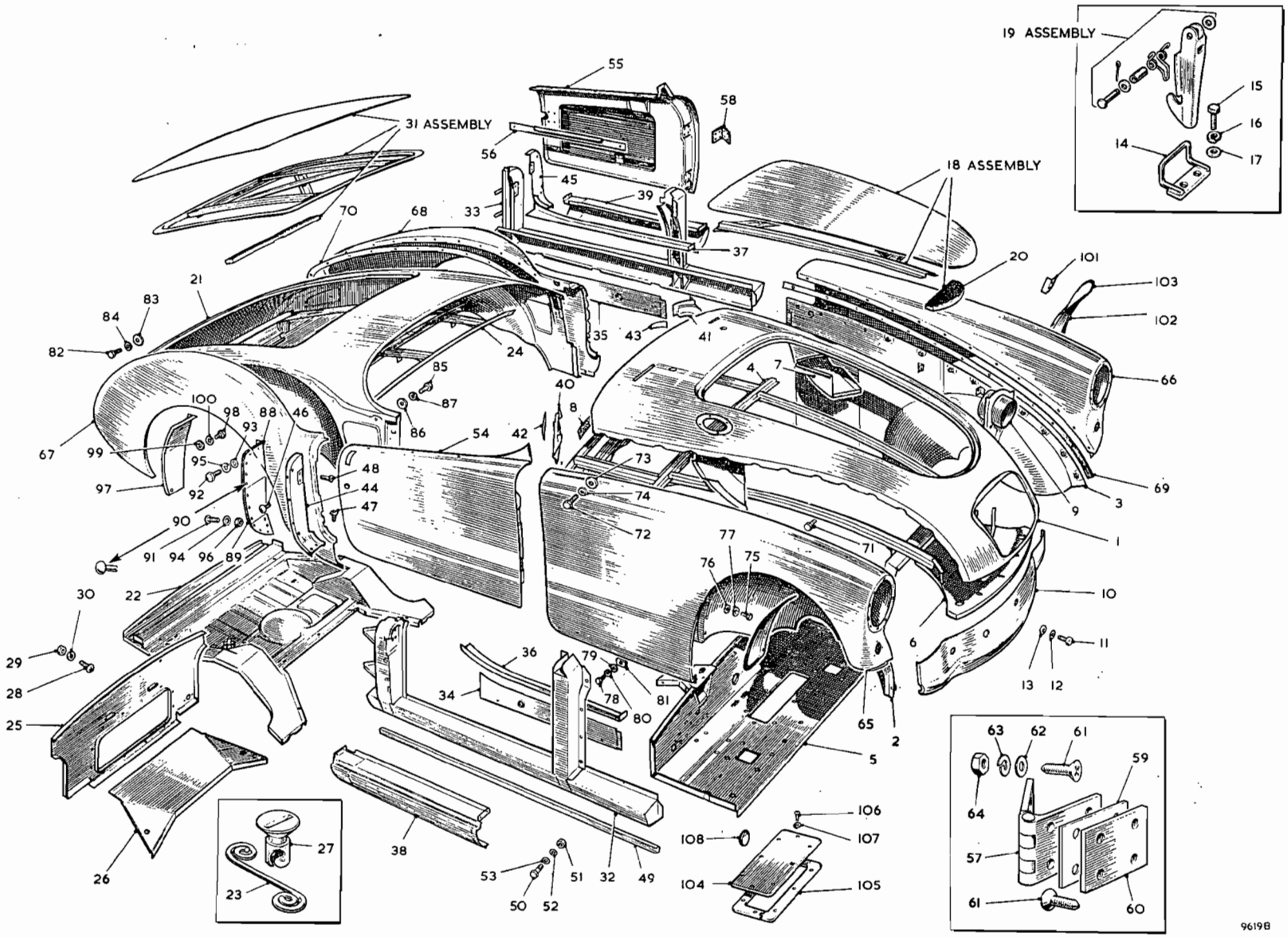
19 ASSEMBLY
31 ASSEMBLY
18 ASSEMBLY
9619B

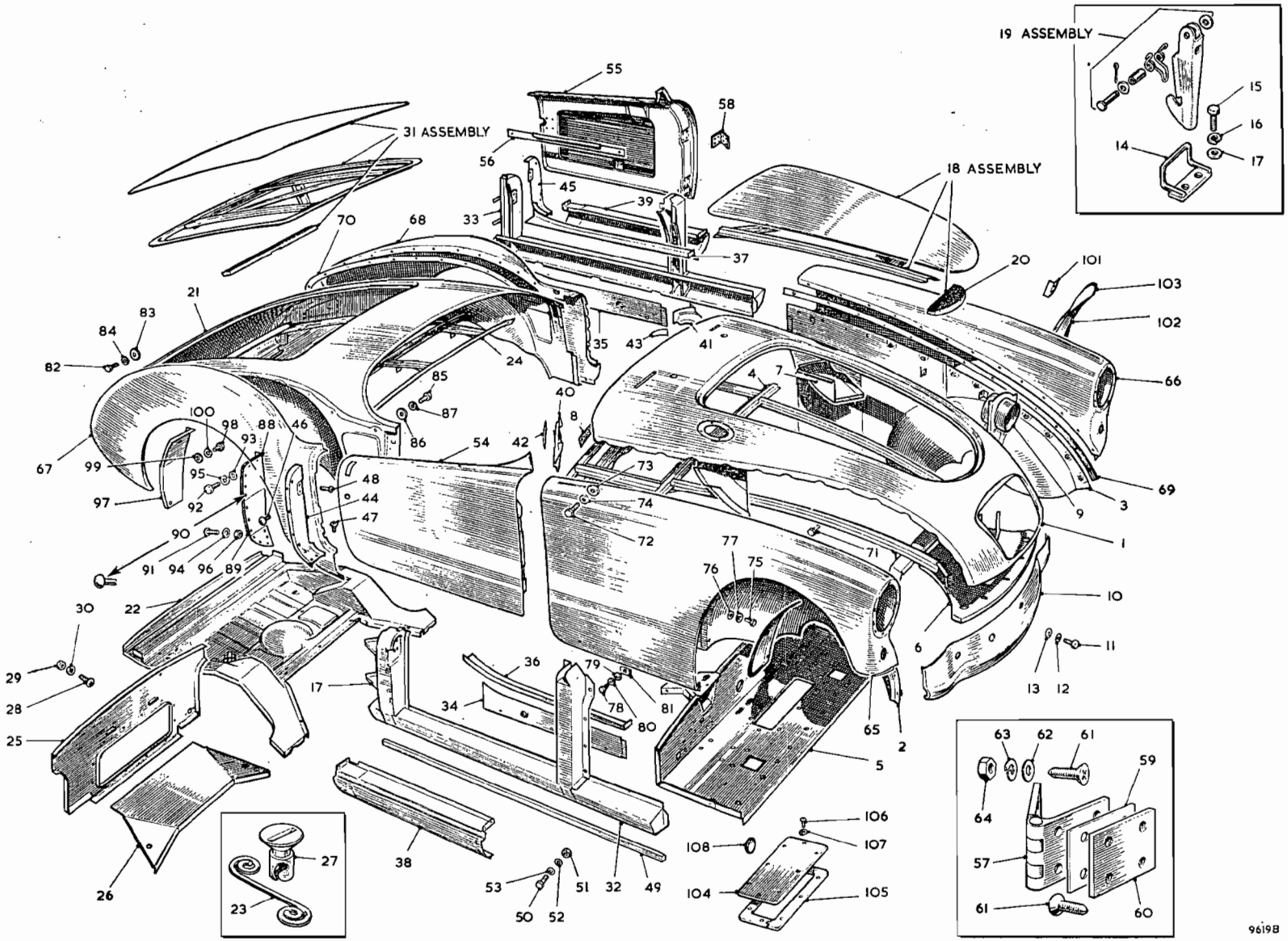

To face page R.2

Item No.	DESCRIPTION	Commencing (C) 10101 Part Number	Illus. No.	Qty. per Vehicle RHD	Qty. per Vehicle LHD	Unit of Issue	Type of Vehicle	MODIFICATIONS New Part Number	MODIFICATIONS Change Point	MODIFICATIONS Amdt. No.	REMARKS
	Body Shell—*continued*										
1	**Sill reinforcement and pillar assembly—R/H**	**AFH1620**	**R32**	1	1						
2	**Sill reinforcement and pillar assembly—L/H**	**AFH1621**	**R33**	1	1						
3	Panel—sill inner R/H	AFH1656	R34	1	1						
4	Panel—sill inner L/H	AFH1657	R35	1	1						
5	Plate—sill sealing R/H	AFH1658	R36	1	1						
6	Plate—sill sealing L/H	AFH1659	R37	1	1						
7	Panel—sill outer R/H	AFH2624	R38	1	1						
8	Panel—sill outer L/H	AFH2625	R39	1	1						
9	Pillar top extension—R/H door hinge	AFH1624	R40	1	1						
10	Pillar top extension—L/H door hinge	AFH1625	R41	1	1						
11	Backing plate—R/H hinge pillar extension	AFH1626	R42	1	1						
12	Backing plate—L/H hinge pillar extension	AFH1627	R43	1	1						
13	Facing panel—R/H shut pillar	AFH898	R44	1	1						
14	Facing panel—L/H shut pillar	AFH899	R45	1	1						
15	Screw fixing facing panel—side	RPZ0310	R46	6	6						
16	Screw fixing facing panel—bottom	RTZ804	R47	4	4						
17	Screw fixing facing panel—top	CTZ804	R48	4	4						
18	Finisher—sill lower		R49	2	2			AFH3752			
19	Bolt fixing sill finisher (special)		R50	10	10			AFH3753			
20	Nut for bolt		R51	10	10		Tourer	FNZ103	Com. (C) 19949		
21	Lock washer for nut		R52	10	10			LWZ403			
22	Washer for nut (plain)		R53	10	10			PWZ203			
23	**Door assembly—R/H**	**AFH1666**	**R54**	1	1						
24	**Door assembly—L/H**	**AFH1667**	**R55**	1	1						
25	Stiffener—door casing	AFH1899	R56	2	2						
26	Hinge—door R/H	AFH1494	R57	2	2				Fin. (C) 56068		
27	Hinge—door L/H	AFH2805	R58	2	2						
28	Hinge—door			4	4			AFH5832	Com. (C) 56069		
29	Packing—door hinge		R59	4	4			AFH5827			
30	Plate—tapping	AFH1464	R60	4	4						
31	Screw fixing hinge	CPZ0412	R61	32	32						
32	Washer for screw (plain)	PWZ204	R62	16	16						
33	Washer for screw (spring)	LWZ204	R63	16	16						
34	Nut for screw	FNZ104	R64	16	16						
35	**Wing assembly—R/H front**	**AFH1690**	**R65**	1	1						
36	**Wing assembly—L/H front**	**AFH1691**	**R66**	1	1						
37	**Wing panel—R/H rear**	**AFH1768**	**R67**	1	1						
38	**Wing panel—L/H rear**	**AFH1769**	**R68**	1	1						
39	Piping—front wing	AFH1692	R69	2	2						
40	Piping—rear wing	AFH1693	R70	2	2						

Item No.	DESCRIPTION	Commencing (C) 10101 Part Number	Illus. No.	Qty. per Vehicle RHD	Qty. per Vehicle LHD	Unit of Issue	Type of Vehicle	MODIFICATIONS New Part Number	MODIFICATIONS Change Point	MODIFICATIONS Amdt. No.	REMARKS
	Body Shell—*continued*										
1	Washer plate for front wing fixings	AFH2627		22	22						
2	Screw fixing front wing to body	HPZ0508	R71	21	21						
3	Screw fixing front wing to body	HPZ0510	R72	5	5						
4	Screw fixing wing closing plate to body	HPZ0408		2	2						
5	Washer for screw (plain)	PWZ205	R73	2	2						
6	Washer for screw (spring)	LWZ205	R74	26	26	24					
7	Washer for screw (plain)	PWZ105		2	2						
8	Screw fixing wing closing plate to body	HPZ0406	R75	8	8						
9	Washer for screw (plain)	PWZ204	R76	8	8						
10	Washer for screw (spring)	LWZ204	R77	8	8						
11	Packing—front wing	AFH3840		2	2						
12	Washer plate for rear wing fixing	AFH2627		20	20						
13	Screw fixing front wing to sill	AFH2587	R78	6	6						
14	Washer for screw (plain)	PWZ203	R79	6	6						
15	Washer for screw (spring)	LWZ203	R80	6	6						
16	Washer plate for front wing—lower	AFH2546	R81	6	6						
17	Screw fixing rear wing to body	HPZ0508	R82	22	22						
18	Washer for screw (plain)	PWZ205	R83	2	2						
19	Washer for screw (spring)	LWZ205	R84	22	22	24					
20	Screw fixing rear wing to sill	AFH2587	R85	4	4						
21	Washer for screw (plain)	PWZ203	R86	4	4		Tourer				
22	Washer for screw (spring)	LWZ203	R87	4	4						
23	Washer plate for rear wing—lower	AFH2546		4	4						
24	Splash plate—rear wing R/H front		R88	1	1			AFH4782			
25	Splash plate—rear wing L/H front			1	1			AFH4783			
26	Seal—splash plate—R/H (rubber)		R89	1	1			AFH4784			
27	Seal—splash plate—L/H (rubber)			1	1			AFH4785			
28	Rivet—seal to plate		R90	22	22			BRP906			
29	Screw fixing lower plate		R91	4	4			PTZ604	Com. (C) 29935		
30	Screw fixing plate to body		R92	4	4			HZS0405			
31	Washer for screw (plain)		R93	4	4			PWZ204			
32	Washer for screw (plain)		R94	4	4			PWZ104			
33	Washer for screw (spring)		R95	4	4			LWZ204			
34	Nut for screw		R96	4	4			FNZ104			
35	Splash plate assembly—R/H rear wing	AFH1704	R97	1	1						
36	Splash plate assembly—L/H rear wing	AFH1705		1	1						
37	Screw fixing rear splash plate	HZS0405	R98	8	8						
38	Washer for screw (plain)	PWZ204	R99	8	8						
39	Washer for screw (spring)	LWZ204	R100	8	8						
40	Bracket assembly—front wing splash plate	AFH1700	R101	2	2						
41	Seal—R/H front splash plate (rubber)	AFH1710		1	1						
42	Seal—L/H front splash plate (rubber)	AFH1711	R102	1	1						

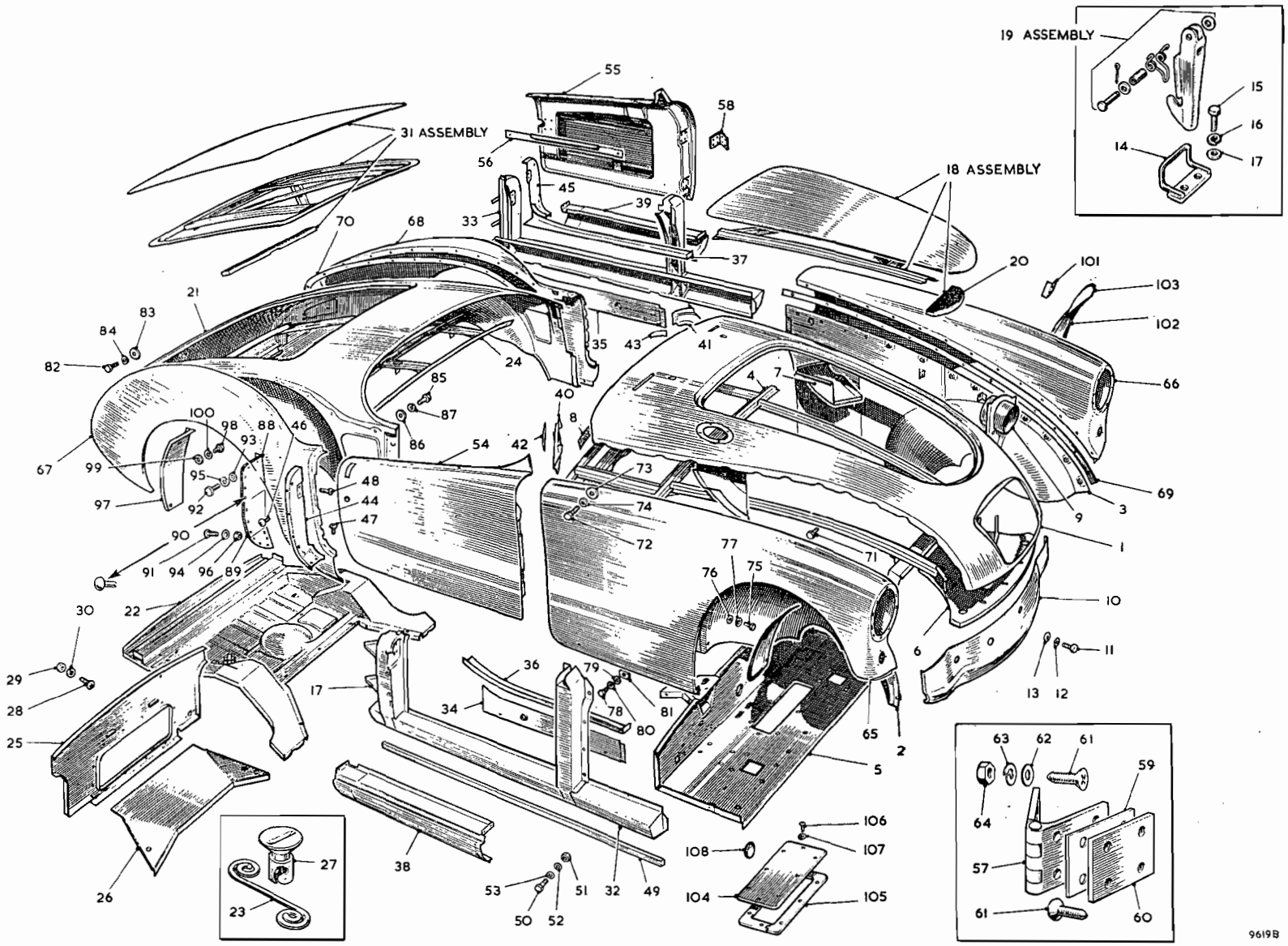

To face page R.3

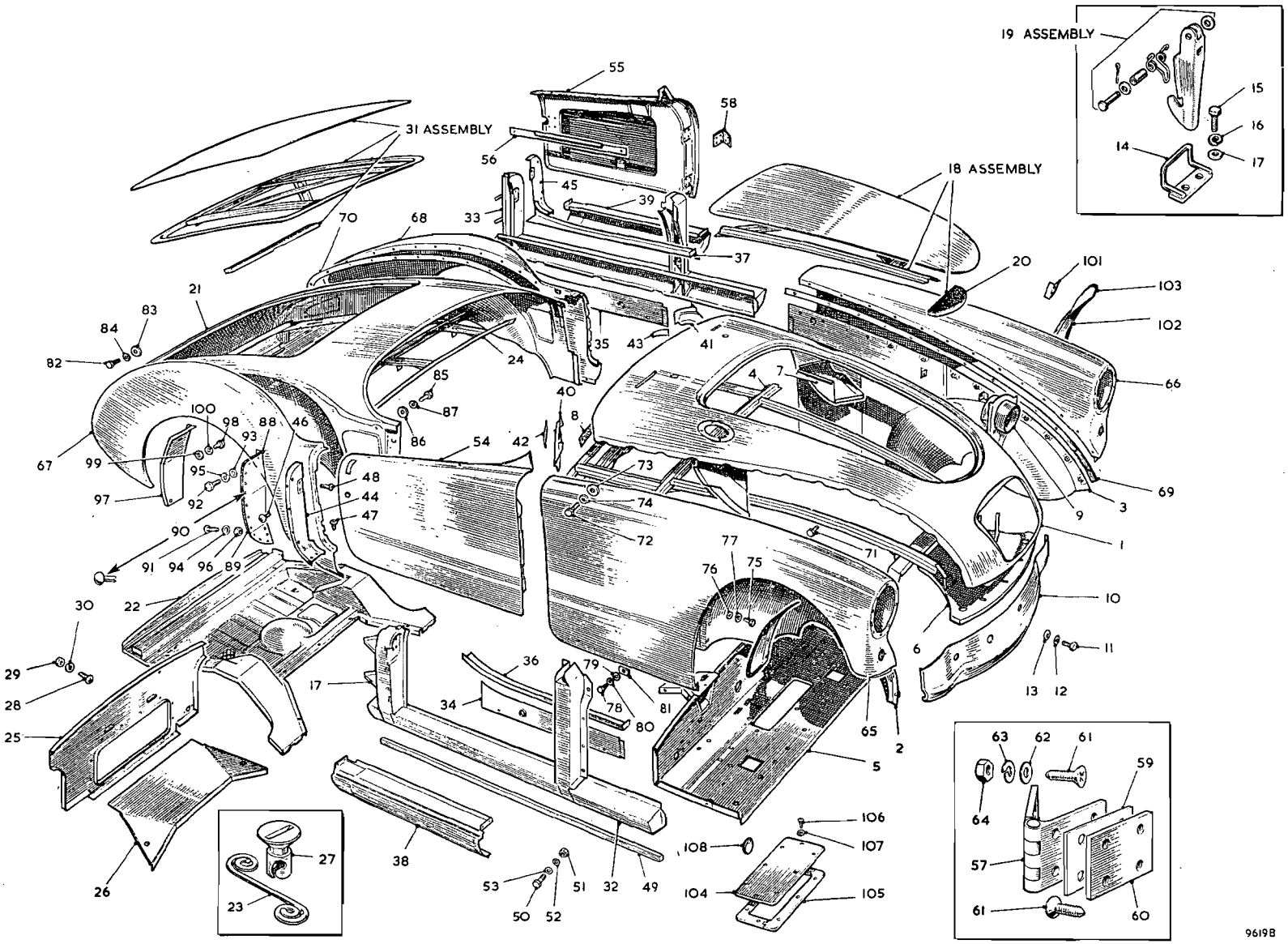

96198

To face page R.4

Item No.	DESCRIPTION	Commencing (C) 10101 Part Number	Illus. No.	Qty. per Vehicle RHD	Qty. per Vehicle LHD	Unit of Issue	Type of Vehicle	MODIFICATIONS New Part Number	MODIFICATIONS Change Point	MODIFICATIONS Amdt. No.	REMARKS
	Body Shell—*continued*										
1	Splash plate—R/H front wing	AFH1702		1	1						
2	Splash plate—L/H front wing	AFH1703	R103	1	1						
3	Screw fixing front splash plate	HZS0405		4	4						
4	Washer for screw (plain)	PWZ204		4	4						
5	Washer for screw (spring)	LWZ204		4	4						
6	Washer plate—splasher to front wing	AFH2546		2	2						
7	Screw fixing splasher to front wing	AFH2587		2	2						
8	Nut for screw	FNZ103		2	2						
9	Washer for nut (spring)	LWZ203		2	2		Tourer				
10	Cover-plate—heater aperture	AHH5252	R104	1	1						
11	Gasket—heater sealing	AHH5253	R105	2	2						
12	Screw fixing cover-plate	PPZ0310	R106	8	8						
13	Washer for screw (spring)	LWZ203	R107	8	8						
14	Grommet—blanking valve control	4G2541	R108	1	1						
15	Screw fixing front wing splash to body	HPZ0405		12	12						
16	Washer for screw (spring)	LWZ204		12	12						
17	Washer for screw (plain)	PWZ204		12	12						

Item No.	DESCRIPTION	Commencing (C) 20671 Part Number	Illus. No.	Qty. per Vehicle RHD	Qty. per Vehicle LHD	Unit of Issue	Type of Vehicle	MODIFICATIONS New Part Number	MODIFICATIONS Change Point	MODIFICATIONS Amdt. No.	REMARKS
	Body Shell—*continued*										
1	**Shell—body—primed**	**AFH5828**		1							
2	**Shell—body—primed**	**AFH5829**			1						
3	**Front end assembly**	**AFH5485**		1	1						
4	**Panel assembly—bonnet surround**	**AFH3866**	**RA1**	1	1						
5	Panel—bonnet surround	N.S.P.		1	1						
6	Front side assembly—R/H	AFH4896	RA2	1	1						
7	Front side assembly—L/H	AFH4897	RA3	1	1						
8	Bonnet surround reinforcement	AFH3867	RA4	1	1						
9	Panel assembly—front bulkhead	AFH1524	RA5	1	1						
10	Panel—radiator duct	AFH900	RA6	1	1						
11	Box assembly—R/H air duct	AFH1502		1	1						
12	Box assembly—L/H air duct	AFH1503	RA7	1	1						
13	Strip—front bulkhead packing	AFH1794	RA8	1	1						
14	Tube—air duct	AFH1527	RA9	2	2						
15	Panel—front valance	AFH1896	RA10	1	1						
16	Screw fixing panel	AFH2587	RA11	14	14						
17	Washer for screw (spring)	LWZ203	RA12	14	14						
18	Washer for screw (plain)	PWZ203	RA13	8	8						
19	Washer—plate	AFH2546		6	6						
20	Bracket—bonnet lock safety catch	AFH1767	RA14	1	1		Coupé				
21	Screw fixing bracket	AFH2587	RA15	2	2						
22	Washer for screw (spring)	LWZ203	RA16	2	2						
23	Washer for screw (plain)	PWZ203	RA17	2	2						
24	**Panel assembly—bonnet lid**	**AFH4880**	**RA18**	1	1						
25	Safety catch assembly	14A366	RA19	1	1						
26	Batten—bonnet lid stiffening	AFH2462	RA20	1	1			AFH4879	Com. (C) 26681		
27	**Tonneau assembly**	**AFH3878**		1	1						
28	**Tonneau sub-assembly**	**AFH3879**		1	1						
29	Tonneau panel	AFH3881	RA21	1	1						
30	**Floor assembly—boot**	**AFH1874**	**RA22**	1	1						
31	Dzus spring	7H9828	RA23	5	5						
32	Reinforcement assembly—tonneau	AFH3880	RA24	1	1						
33	Panel assembly—rear bulkhead	AFH3820	RA25	1	1						
34	**Panel assembly—battery cover**	**AFH1663**	**RA26**	1	1						
35	Dzus fastener	7H9827	RA27	5	5						
36	Screw fixing rear bulkhead panel	PMZ0308	RA28	2	2						
37	Nut for screw	FNZ103	RA29	2	2						
38	Washer for nut (spring)	LWZ203	RA30	2	2						
39	**Lid assembly—boot**	**AFH1577**	**RA31**	1	1						

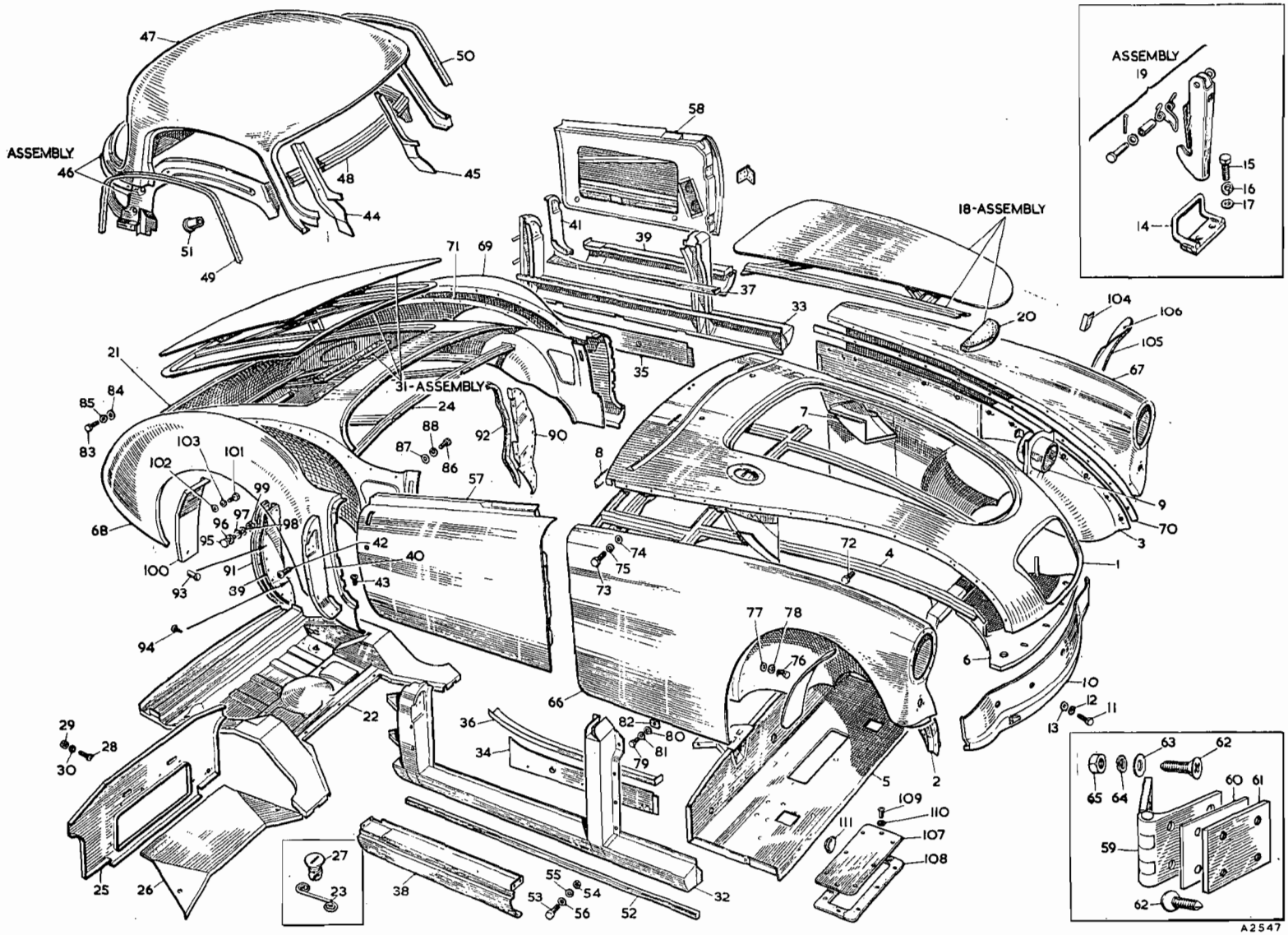

To face page R.5

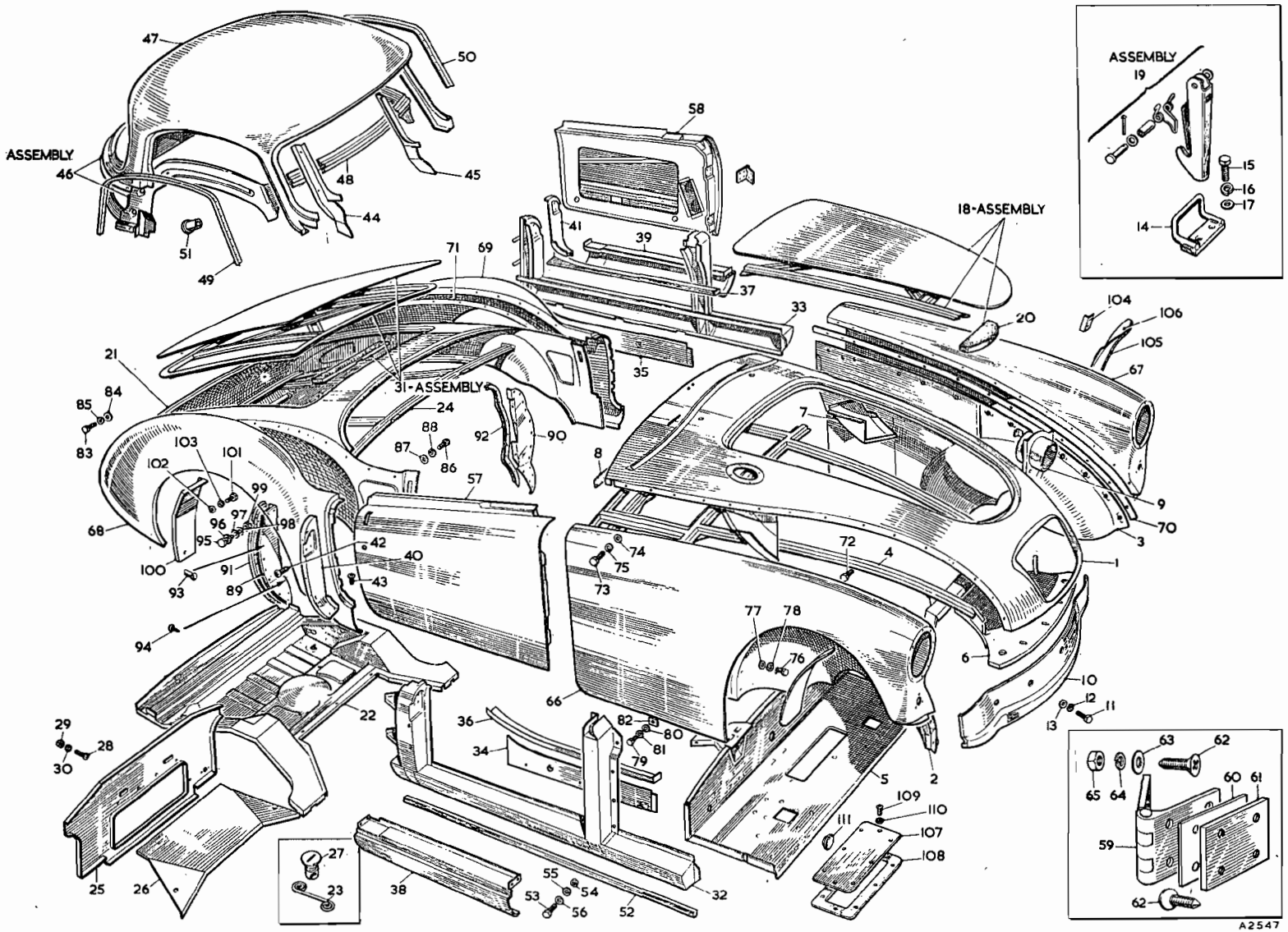

To face page R.6

Item No.	DESCRIPTION	Commencing (C) 20671 Part Number	Illus. No.	Qty. per Vehicle RHD	Qty. per Vehicle LHD	Unit of Issue	Type of Vehicle	MODIFICATIONS New Part Number	MODIFICATIONS Change Point	MODIFICATIONS Amdt. No.	REMARKS
	Body Shell—*continued*										
1	**Sill reinforcement and pillar assembly—R/H**	**AFH3882**	**RA32**	**1**	**1**						
2	**Sill reinforcement and pillar assembly—L/H**	**AFH3883**	**RA33**	**1**	**1**						
3	Shut pillar assembly—R/H	AFH3780		1	1						
4	Shut pillar assembly—L/H	AFH3781		1	1						
5	Panel—sill inner—R/H	AFH1656	RA34	1	1						
6	Panel—sill inner—L/H	AFH1657	RA35	1	1						
7	Plate—sill sealing—R/H	AFH1658	RA36	1	1						
8	Plate—sill sealing—L/H	AFH1659	RA37	1	1						
9	Panel—sill outer—R/H	AFH2624	RA38	1	1						
10	Panel—sill outer—L/H	AFH2625	RA39	1	1						
11	Panel—facing—shut pillar—R/H	AFH3786	RA40	1	1						
12	Panel—facing—shut pillar—L/H	AFH3787	RA41	1	1						
13	Screw fixing facing panel—side	RPZ0310	RA42	4	4						
14	Screw fixing facing panel—bottom	RTZ804	RA43	4	4						
15	Pillar reinforcement—windscreen—R/H	AFH4466	RA44	1	1						
16	Pillar reinforcement—windscreen—L/H	AFH4467	RA45	1	1						
17	**Roof assembly**	**AFH4748**	**RA46**	**1**	**1**						
18	Panel assembly—roof	AFH4464	RA47	1	1						
19	Panel—reinforcement assembly	AFH4465	RA48	1	1						
20	**Dripway—door opening—R/H**	**AFH4482**	**RA49**	**1**	**1**		Coupé				
21	**Dripway—door opening—L/H**	**AFH4483**	**RA50**	**1**	**1**						
22	Rivet—dripway to roof panel	AFH5453	RA51	52	52						
23	Finisher—sill lower	AFH3752	RA52	2	2						
24	Bolt fixing sill finisher (special)	AFH3753	RA53	10	10						
25	Nut for bolt	FNZ103	RA54	10	10						
26	Lock washer for nut	LWZ403	RA55	10	10						
27	Washer for nut (plain)	PWZ203	RA56	10	10						
28	**Door assembly—R/H**	**AFH4806**	**RA57**	**1**							
29	**Door assembly—L/H**	**AFH4807**	**RA58**	**1**							
30	**Door assembly—R/H**	**AFH3884**			**1**						
31	**Door assembly—L/H**	**AFH3885**			**1**						
32	Hinge—door—R/H	AFH1494	RA59	2	2				] Fin. (C) 52915		
33	Hinge—door—L/H	AFH2805		2	2						
34	Hinge—door			4	4			AFH5832	] Com. (C) 52916		
35	Packing—door hinge		RA60	4	4			AFH5827			
36	Plate—tapping—door hinge	AFH1464	RA61	4	4						
37	Screw fixing hinge	CPZ0412	RA62	32	32						
38	Washer for screw (plain)	PWZ204	RA63	16	16						
39	Washer for screw (spring)	LWZ204	RA64	16	16						
40	Nut for screw	FNZ104	RA65	16	16						

Item No.	DESCRIPTION	Commencing (C) 20671		Qty. per Vehicle		Unit of Issue	Type of Vehicle	MODIFICATIONS			REMARKS
		Part Number	Illus. No.	RHD	LHD			New Part Number	Change Point	Amdt. No.	
	Body Shell—*continued*										
1	**Wing assembly—R/H front**	**AFH4478**	**RA66**	1	1						
2	**Wing assembly—L/H front**	**AFH4479**	**RA67**	1	1						
3	**Wing assembly—R/H rear**	**AFH4480**	**RA68**	1	1						
4	**Wing assembly—L/H rear**	**AFH4481**	**RA69**	1	1						
5	Piping—front wing	AFH1692	RA70	2	2						
6	Piping—rear wing	AFH1693	RA71	2	2						
7	Washer—plate—for front wing fixings	AFH2627		22	22						
8	Screw fixing front wing to body	HPZ0508	RA72	21	21						
9	Screw fixing front wing to body	HPZ0510	RA73	5	5						
10	Screw fixing wing closing plate to body	HPZ0408		2	2						
11	Washer for screw (plain)	PWZ205	RA74	2	2						
12	Washer for screw (spring)	LWZ205	RA75	26	26	24					
13	Washer for screw (plain)	PWZ105		2	2						
14	Screw fixing wing closing plate to body	HPZ0406	RA76	8	8						
15	Washer for screw (plain)	PWZ204	RA77	8	8						
16	Washer for screw (spring)	LWZ204	RA78	8	8						
17	Packing—front wing	AFH3840		2	2						
18	Washer—plate—for rear wing fixing	AFH2627		20	20						
19	Screw fixing front wing to sill	AFH2587	RA79	6	6						
20	Washer for screw (plain)	PWZ203	RA80	6	6		Coupé				
21	Washer for screw (spring)	LWZ203	RA81	6	6						
22	Washer—plate—for front wing lower	AFH2546	RA82	6	6						
23	Screw fixing rear wing to body	HPZ0508	RA83	22	22						
24	Washer for screw (plain)	PWZ205	RA84	2	2						
25	Washer for screw (spring)	LWZ205	RA85	22	22	24					
26	Screw fixing rear wing to sill	AFH2587	RA86	4	4						
27	Washer for screw (plain)	PWZ203	RA87	4	4						
28	Washer for screw (spring)	LWZ203	RA88	4	4						
29	Washer—plate—for rear wing lower	AFH2546		4	4						
30	Splash plate—rear wing—front R/H	AFH4782	RA89	1	1						
31	Splash plate—rear wing—front L/H	AFH4783	RA90	1	1						
32	Seal—rubber—splash plate—R/H	AFH4784	RA91	1	1						
33	Seal—rubber—splash plate—L/H	AFH4785	RA92	1	1						
34	Rivet—seal to plate	BRP906	RA93	22	22						
35	Screw fixing lower plate	PTZ604	RA94	4	4						
36	Screw fixing plate to body	HZS0405	RA95	4	4						
37	Washer (plain)	PWZ204	RA96	4	4						
38	Washer (plain)	PWZ104	RA97	4	4						
39	Washer (spring)	LWZ204	RA98	4	4						
40	Nut for screw—plate to body	FNZ104	RA99	4	4						

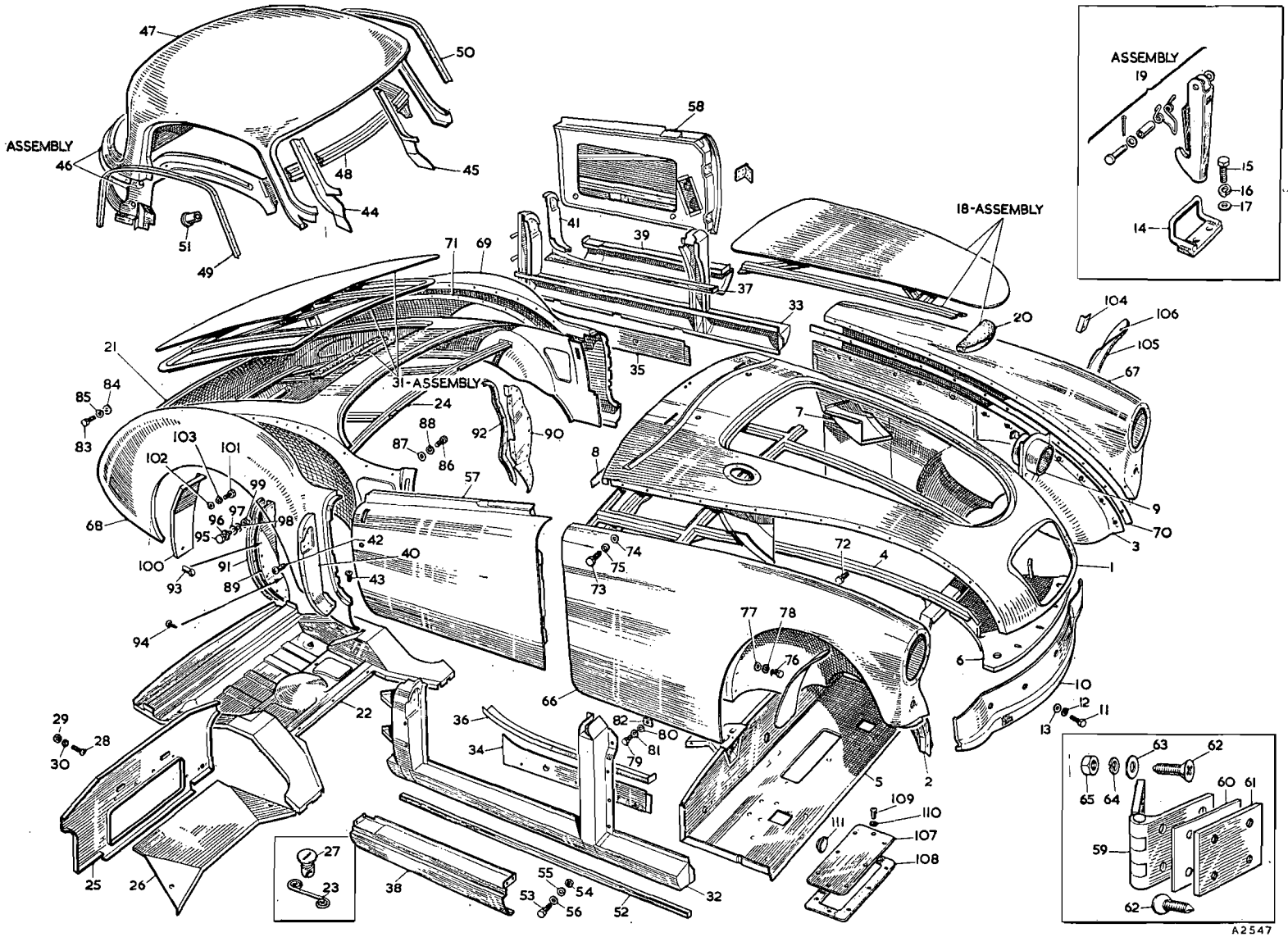

To face page R.7

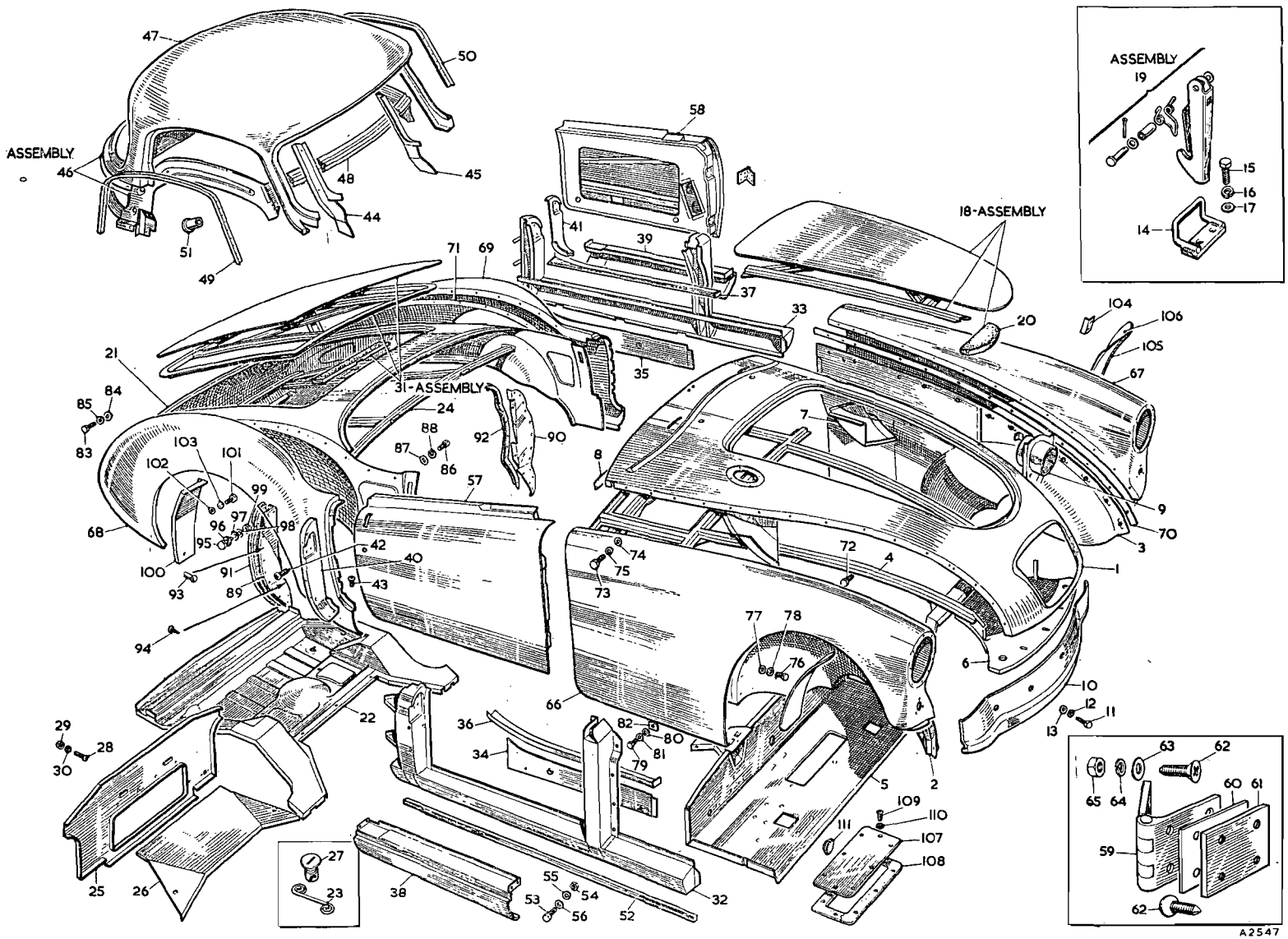

To face page R.8

Item No.	DESCRIPTION	Commencing (C) 20671 Part Number	Illus. No.	Qty. per Vehicle RHD	LHD	Unit of Issue	Type of Vehicle	MODIFICATIONS New Part Number	Change Point	Amdt. No.	REMARKS
	Body Shell—*continued*										
1	Splash plate assembly—R/H rear wing	AFH1704	RA100	1	1						
2	Splash plate assembly—L/H rear wing	AFH1705		1	1						
3	Screw fixing rear splash plate	HZS0405	RA101	8	8						
4	Washer for screw (plain)	PWZ204	RA102	8	8						
5	Washer for screw (spring)	LWZ204	RA103	8	8						
6	Bracket assembly—front wing splash plate	AFH1700	RA104	2	2						
7	Seal—R/H front splash plate (rubber)	AFH1710		1	1						
8	Seal—L/H front splash plate (rubber)	AFH1711	RA105	1	1						
9	Splash plate—R/H front wing	AFH1702		1	1		Coupé				
10	Splash plate—L/H front wing	AFH1703	RA106	1	1						
11	Screw fixing front splash plate	HZS0405		4	4						
12	Washer for screw (plain)	PWZ204		4	4						
13	Washer for screw (spring)	LWZ204		4	4						
14	Cover-plate—heater aperture	AHH5252	RA107	1	1						
15	Gasket—heater sealing	AHH5253	RA108	2	2						
16	Screw fixing cover-plate	PPZ0310	RA109	8	8						
17	Washer for screw (spring)	LWZ203	RA110	8	8						
18	Grommet—blanking valve control	4G2541	RA111	1	1						

Item No.	DESCRIPTION	Commencing (C) 10101 Part Number	Illus. No.	Qty. per Vehicle RHD	Qty. per Vehicle LHD	Unit of Issue	Type of Vehicle	MODIFICATIONS New Part Number	MODIFICATIONS Change Point	MODIFICATIONS Amdt. No.	REMARKS
	FLOORING—RAMPS—PROPELLER SHAFT TUNNEL—GEARBOX COVER										
1	**Floorboard—rear—R/H**	**AHH5205**	**RB1**	1	1						
2	**Floorboard—rear—L/H**	**AHH5206**	**RB2**	1	1						
3	**Floorboard—front—R/H**	**AHH5208**	**RB3**	1	1						
4	**Floorboard—front—L/H**	**AHH5209**	**RB4**	1	1						
5	**Toeboard—R/H**	**AHH5262**	**RB5**	1	1			**AHH5817**	**Com. (C) 61504**		
6	**Toeboard—L/H**	**AHH5263**	**RB6**	1	1						
7	**Rear ramp**	**AHH5207**	**RB7**	1	1						
8	Sealing rubber—centre—rear ramp	AHH5455	RB8	1	1						
9	Sealing rubber—outer—rear ramp	AHH5456	RB9	2	2						
10	Packing for rear floor (boot)	AHH5180		3	3						
11	**Gearbox cover assembly**	**AHH5325**	**RB10**	1	1			**AHH5815**	**Com. (C) 61504**		
12	Seal (rubber) for gearbox cover	AHH5194		2	2						
13	Grommet for dipstick hole in gearbox cover	ACA5300	RB11	1	1						
14	Cross-brace plate for gearbox cover	AHH5226	RB12	2	2						
15	Seal (felt) for toeboard—top	AHH5377	RB13	2	2						
16	Seal (felt) for toeboard support	AHH5378		2	2						
17	Seal (felt) for toeboard support plate	AHH5379		2	2						
18	**Propeller shaft tunnel**	**AHH5199**	**RB14**	1	1						
19	Seal (felt) for propeller shaft tunnel—rear	AHH5200	RB15	1	1						
20	Seal (felt) for gearbox cover to tunnel	AHH5340		1	1						
21	Screw fixing floorboards—front	CPZ0416		15	15						
22	Screw fixing floorboards—rear	CPZ0416	RB16	25	25						
23	Screw fixing toeboard—R/H	CPZ0416	RB17	5	5						
24	Screw fixing toeboard and speedometer cable clip—R/H	CPZ0420	RB18	3	3						
25	Screw fixing toeboard—L/H	CPZ0416		4	4						
26	Screw fixing rear ramp and clip	CPZ0416		12	12						
27	Screw fixing gearbox cover to toeboard plate and front L/H floorboard	CPZ0412	RB19	2	2						
28	Countersunk cup washer for screw	64401	RB20	66	66						
29	Screw in floorboard for carpet fixing	94605	RB21	12	12						
30	Screw in toeboard for carpet fixing	183599	RB22	4	4						
31	Nut for toeboard screw	AJD8012Z	RB23	4	4						
32	Washer (spring)	LWZ203	RB24	4	4						
33	Screw blanking accelerator adjusting stop holes in L/H floorboard	CPZ0408		2							
34	Washer for screw (cup)	ACA5374		2							
35	Clip—rear ramp screw—R/H (negative battery cable)	PCR0709		1	1						
36	Washer (shakeproof)	AJD7605		1	1						
37	Locknut for clip screw	FNZ204		1	1						
38	Cover—starter motor (rubber)			1	1			AHH5838	Com. (C) 61504		
39	Floorboard—R/H	AHH5748		1	1						For use with competition-type bucket seats
40	Floorboard—L/H	AHH5749		1	1						For use with competition-type bucket seats
41	Screw fixing floorboard	CMZ0420		16	16						For use with competition-type bucket seats

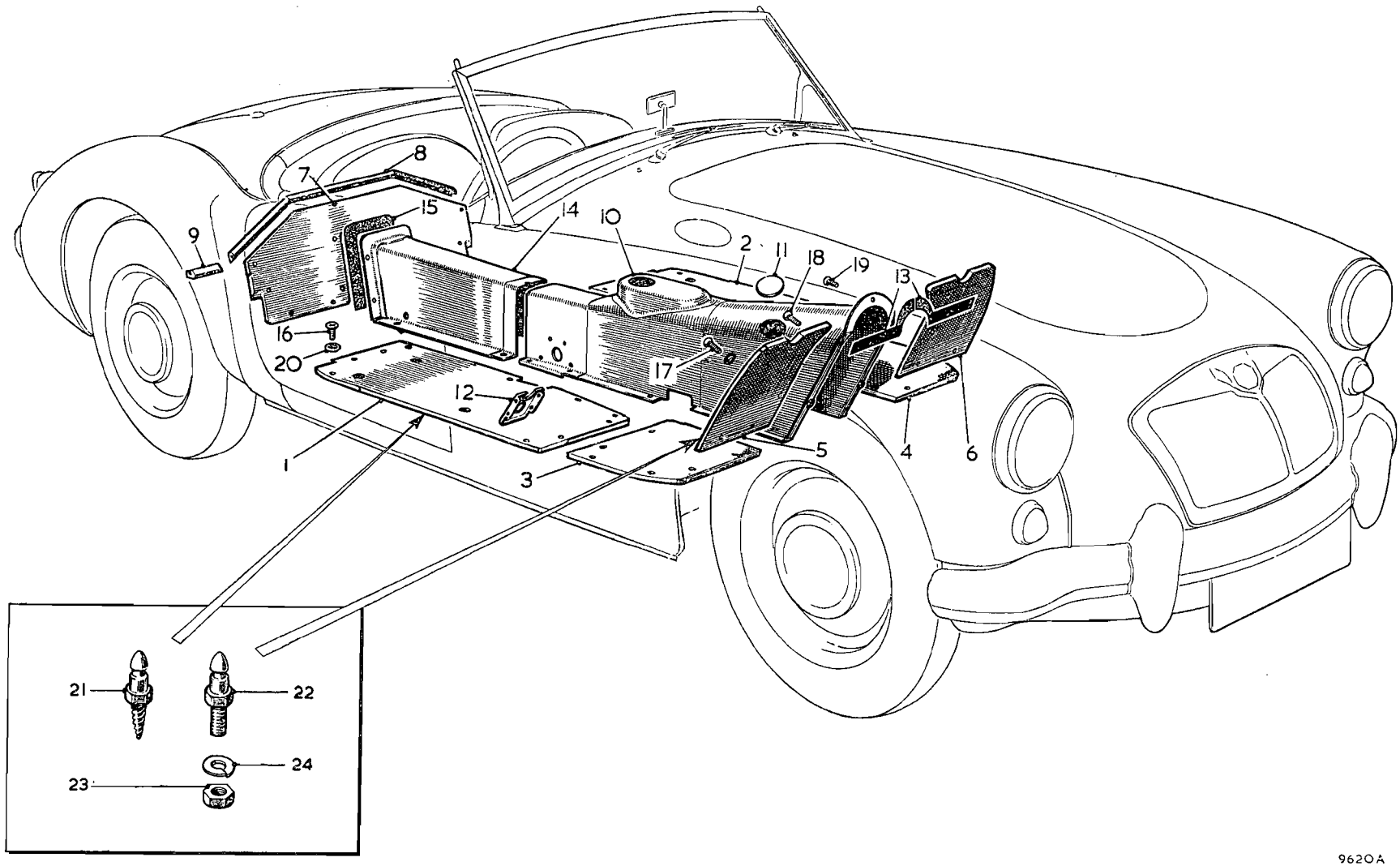

To face page R.9

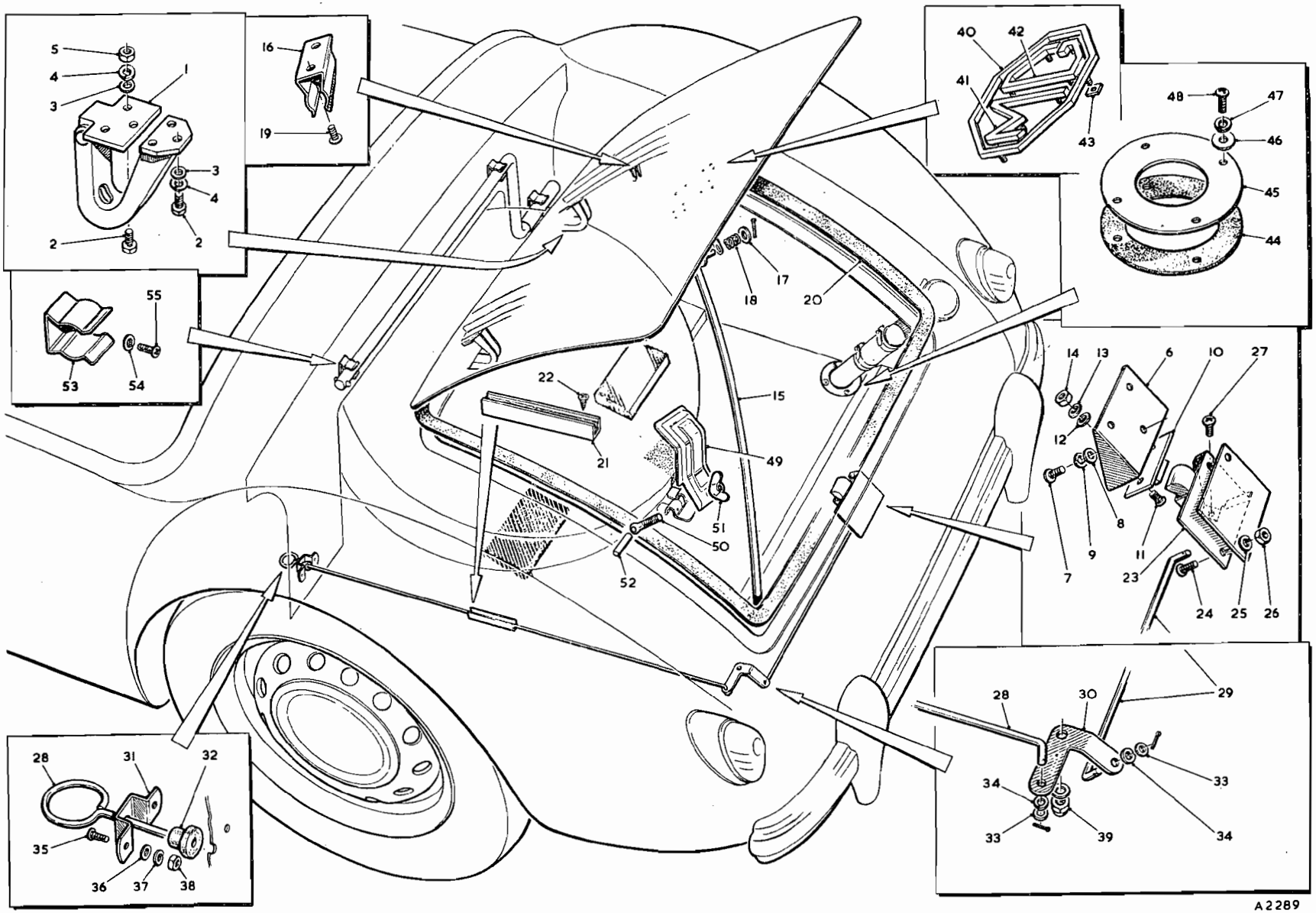

To face page R.10

Item No.	DESCRIPTION	Commencing (C) 10101 Part Number	Illus. No.	Qty. per Vehicle RHD	Qty. per Vehicle LHD	Unit of Issue	Type of Vehicle	MODIFICATIONS New Part Number	MODIFICATIONS Change Point	MODIFICATIONS Amdt. No.	REMARKS
	BOOT LID AND BOOT FLOOR FITTINGS										
1	**Hinge—R/H—boot lid**	**AFH1515**	**RC1**	1	1						
2	**Hinge—L/H—boot lid**	**AFH1514**		1	1						
3	Screw fixing boot lid hinges	AFH2587	RC2	12	12						
4	Washer (plain)	PWZ203	RC3	12	12						
5	Washer (spring)	LWZ203	RC4	12	12						
6	Nut for boot lid hinge screw	FNZ103	RC5	2	2						
7	Bracket for boot lid striking plate	AFH1578	RC6	1	1						
8	Screw for striker plate bracket	AFH2587	RC7	3	3						
9	Washer (plain)	PWZ203	RC8	3	3						
10	Washer (spring)	LWZ203	RC9	3	3						
11	Plate for boot lid striking	AFH1516	RC10	1	1						
12	Screw for striking plate	CMZ0310	RC11	2	2						
13	Washer (plain)	PWZ203	RC12	2	2						
14	Washer (spring)	LWZ203	RC13	2	2						
15	Nut for striking plate screw	FNZ103	RC14	2	2						
16	Rod—boot lid support	AFH1756	RC15	1	1						
17	Clip for support rod	128978	RC16	1	1						
18	Washer for support rod (plain)	PWZ105	RC17	1	1						
19	Spring for support rod	139282	RC18	1	1						
20	Screw for clip to lid	PTZ603	RC19	2	2						
21	Sealing rubber for boot lid	AFH1753	RC20	1	1						
22	Retaining channel for release rod	AFH1789	RC21	1	1						
23	Screw for retaining channel	CTZ403	RC22	2	2						
24	**Lock assembly—boot lid**	**AFH1519**	**RC23**	1	1						
25	Screw fixing lock to body	PMZ0308	RC24	2	2						
26	Washer (spring)	LWZ203	RC25	2	2						
27	Nut for lock to body screw	FNZ103	RC26	2	2						
28	Packing for lock support bracket	AFH2622		1	1						
29	Screw fixing lock to body	PTZ603	RC27	1	1						
30	Rod for boot lock front release	AFH1758	RC28	1	1						
31	Rod for boot lock rear release	AFH1759	RC29	1	1						
32	Lever for boot lock actuating	AFH1747	RC30	1	1						
33	Plate for release rod guide	133222	RC31	1	1						
34	Grommet for release rod	133221	RC32	1	1						
35	Washer for release rods (plain)	PWZ203	RC33	3	3						
36	Washer for release rods (spring)	128900	RC34	3	3						
37	Screw fixing guide plate to bulkhead	PMZ0208	RC35	2	2						
38	Washer (plain)	PWZ202	RC36	2	2						
39	Washer (spring)	LWZ202	RC37	2	2						
40	Nut for guide plate screw	CNZ102	RC38	2	2						
41	Nut for actuating lever pivot	LNZ104	RC39	1	1						

Item No.	DESCRIPTION	Commencing (C) 10101 Part Number	Illus. No.	Qty. per Vehicle RHD	Qty. per Vehicle LHD	Unit of Issue	Type of Vehicle	MODIFICATIONS New Part Number	MODIFICATIONS Change Point	MODIFICATIONS Amdt. No.	REMARKS
	Boot Lid and Boot Floor Fittings—*continued*										
1	**Surround—boot lid badge**	**AHH5261**	**RC40**	1	1						
2	**Letter 'M'**	**ADH2475**	**RC41**	1	1						
3	**Letter 'G'**	**ADH2476**	**RC42**	1	1						
4	Spire nut—surround and badge	PFS103	RC43	13	13						
5	Seal—petrol filler—boot floor	AHH5260	RC44	1	1						
6	Cover-plate—petrol filler seal	AHH5259	RC45	1	1						
7	Washer—special—seal/plate to floor	AJD7212	RC46	3	3						
8	Washer—spring—seal/plate to floor	LWZ203	RC47	3	3						
9	Screw—seal/plate to floor	PMZ0308	RC48	3	3						
10	Clamp—spare wheel	H7336	RC49	1	1						
11	Bolt for spare wheel clamping	AHH5349	RC50	1	1						
12	Wing nut for clamping bolt	AHH5351	RC51	1	1						
13	Cross-pin—spare wheel fixing	AHH5350	RC52	1	1						
14	Clip for starting-handle	5843	RC53	3	3						
15	Washer—spring—clip to rear bulkhead	LWZ203	RC54	3	3						
16	Screw fixing clip to rear bulkhead	PPZ0305	RC55	3	3						
17	Felt packing for spare wheel	AHH5459		2	2						

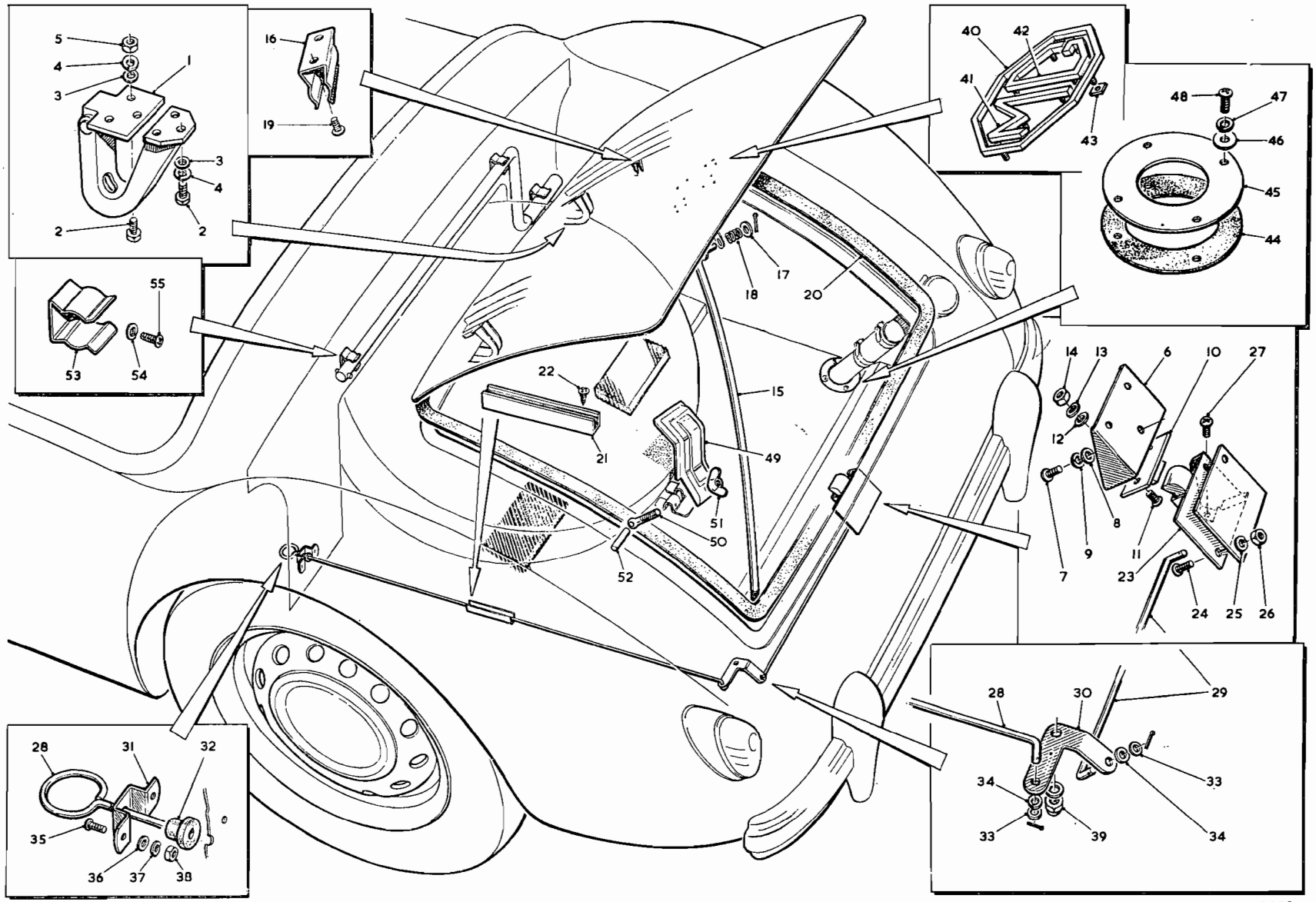

To face page R.11

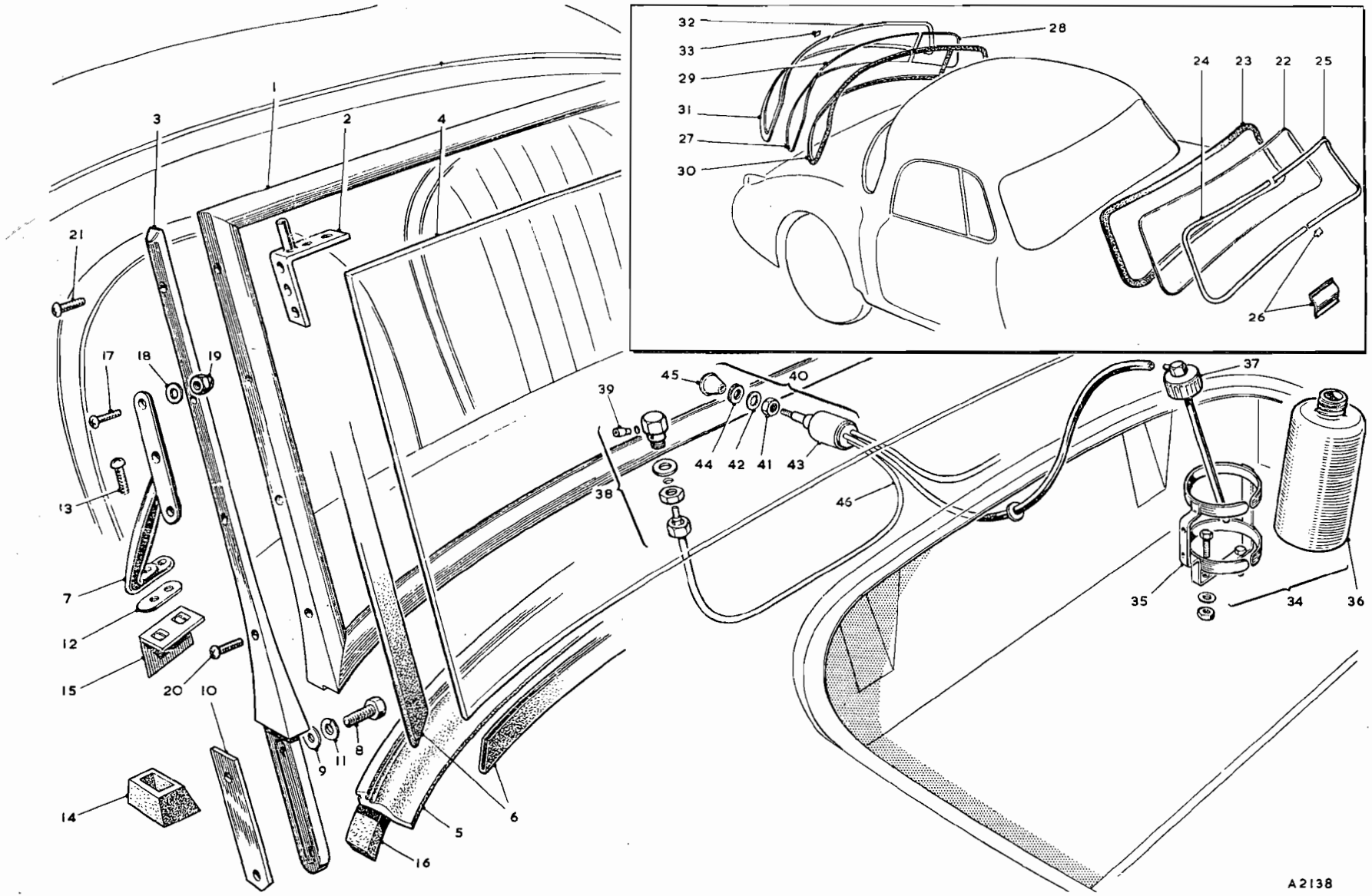

To face page R.12

Item No.	DESCRIPTION	Commencing (C) 10101 Part Number	Illus. No.	Qty. per Vehicle RHD	Qty. per Vehicle LHD	Unit of Issue	Type of Vehicle	MODIFICATIONS New Part Number	MODIFICATIONS Change Point	MODIFICATIONS Amdt. No.	REMARKS
	WINDSCREEN										
1	**Windscreen assembly**	**AFH1716**		1	1						
2	Frame	AFH1717	RD1	1	1						
3	Peg—hood attachment—R/H	AFH2630	RD2	1	1						
4	Peg—hood attachment—L/H	AFH2631		1	1						
5	Stanchion—R/H	AFH1718	RD3	1	1						
6	Stanchion—L/H	AFH1719		1	1						
7	**Glass**	**AFH1720**	**RD4**	1	1						
8	Apron (rubber)	AFH1721	RD5	1	1						
9	Glazing rubber	AFH1724	RD6	1	1						
10	Grab handle—R/H	AFH1722	RD7	1	1						
11	Grab handle—L/H	AFH1723		1	1						
12	Bolt—stanchion to body	HBZ0610	RD8	4	4						
13	Washer (plain)	PWZ106	RD9	4	4		Tourer				
14	Packing—stanchion	AFH2547	RD10	A/R	A/R						
15	Washer (spring)	LWZ206	RD11	4	4						
16	Packing-piece—grab handle	AFH1687	RD12	2	2						
17	Screw fixing grab handle to body	RPP0312	RD13	4	4						
18	Grommet—stanchion to body	AFH1726	RD14	2	2						
19	Reinforcement assembly—grab handle	AFH1787	RD15	2	2						
20	Packing for windscreen	AFH2868	RD16	2	2						
21	Screw fixing grab handle to frame	CMP0307	RD17	6	6						
22	Washer (plain)	PWZ203	RD18	6	6						
23	Nut—domed—handle to frame	AFH2809	RD19	6	6						
24	Screw fixing stanchion to frame—bottom (long)	RMP0312	RD20	2	2						
25	Screw fixing stanchion to frame (short)	RMP0310	RD21	6	6						
26	**Glass—windscreen**	**AFH3830**	**RD22**	1	1						
27	Rubber—windscreen surround	AFH3831	RD23	1	1						
28	Finisher—windscreen surround—R/H	AFH3832	RD24	1	1						
29	Finisher—windscreen surround—L/H	AFH3833	RD25	1	1						
30	Jointing piece—windscreen finisher	AFH3778	RD26	2	2						
	BACK-LIGHT										
31	**Glass—back-light—side—R/H**	**AFH3834**	**RD27**	1	1		Coupé				
32	**Glass—back-light—side—L/H**	**AFH3835**	**RD28**	1	1						
33	**Glass—back-light—centre**	**AFH3836**	**RD29**	1	1						
34	Rubber—surround assembly—back-light	AFH3837	RD30	1	1						
35	Finisher—back-light surround—R/H	AFH3838	RD31	1	1						
36	Finisher—back-light surround—L/H	AFH3839	RD32	1	1						
37	Jointing piece—back-light finisher	AFH3778	RD33	2	2						

Item No.	DESCRIPTION	Commencing (C) 10101 Part Number	Illus. No.	Qty. per Vehicle RHD	Qty. per Vehicle LHD	Unit of Issue	Type of Vehicle	MODIFICATIONS New Part Number	MODIFICATIONS Change Point	MODIFICATIONS Amdt. No.	REMARKS
	WINDSCREEN WASHER (Optional Extra)										
1	**Windscreen washer kit**	**AHH5798**		**1**	**1**						
2	**Bracket and container**	**17H9747**	**RD34**	**1**	**1**						
3	Bracket	7H9781	RD35	1	1						
4	Container	7H9779	RD36	1	1						
5	Cap	7H9785	RD37	1	1						
6	**Jet mounting assembly**	**7H9777**	**RD38**	**2**	**2**						**Adjustable jet**
7	**Jet mounting assembly**	**17H9746**		**2**	**2**				**Fin. (C) 45185**		**Fixed jet**
8	**Jet mounting assembly**			**2**	**2**			**27H9622**	**Com. (C) 45186**		**Small adjustable jet**
9	Jet		RD39	2	2			27H9623			
10	**Control assembly with tubes**	**7H9776**	**RD40**	**1**	**1**						**Use with 7H9777**
11	**Control assembly with tubes**	**17H9748**		**1**	**1**				**Fin. (C) 45185**		**Use with 17H9746**
12	**Control assembly with tubes**			**1**	**1**			**27H9624**	**Com. (C) 45186**		
13	Nut—plunger	7H9780	RD41	1	1						
14	Washer (shakeproof)	7H9782	RD42	1	1						
15	Rubber bulb		RD43	1	1			27H9626	Com. (C) 45186		
16	Collar—knurled	7H9784	RD44	1	1						
17	Push-button knob	7H9783	RD45	1	1			27H9625	Com. (C) 45186		
18	Tubing (state length)	7H9786	RD46	A/R	A/R						

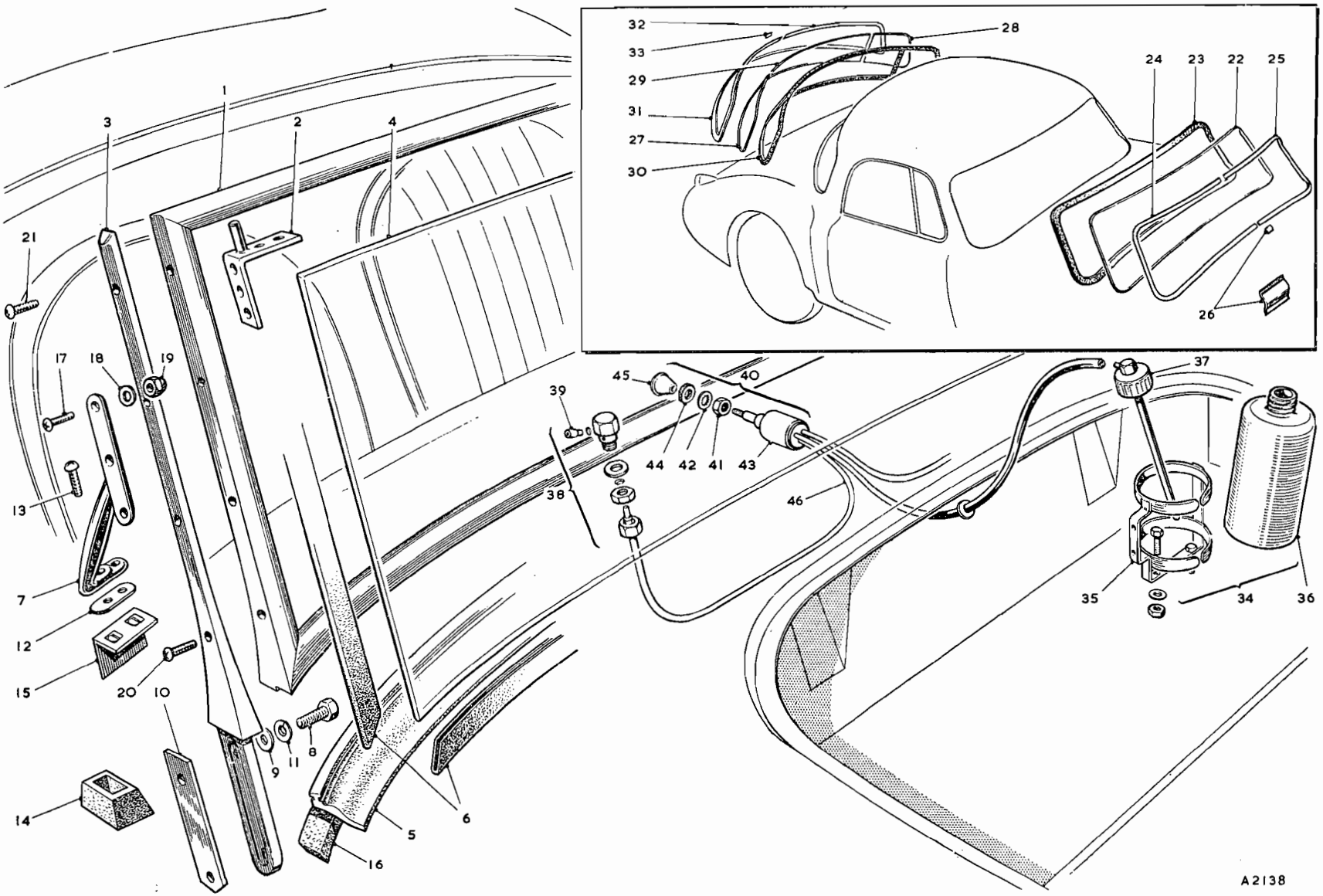

To face page R.13

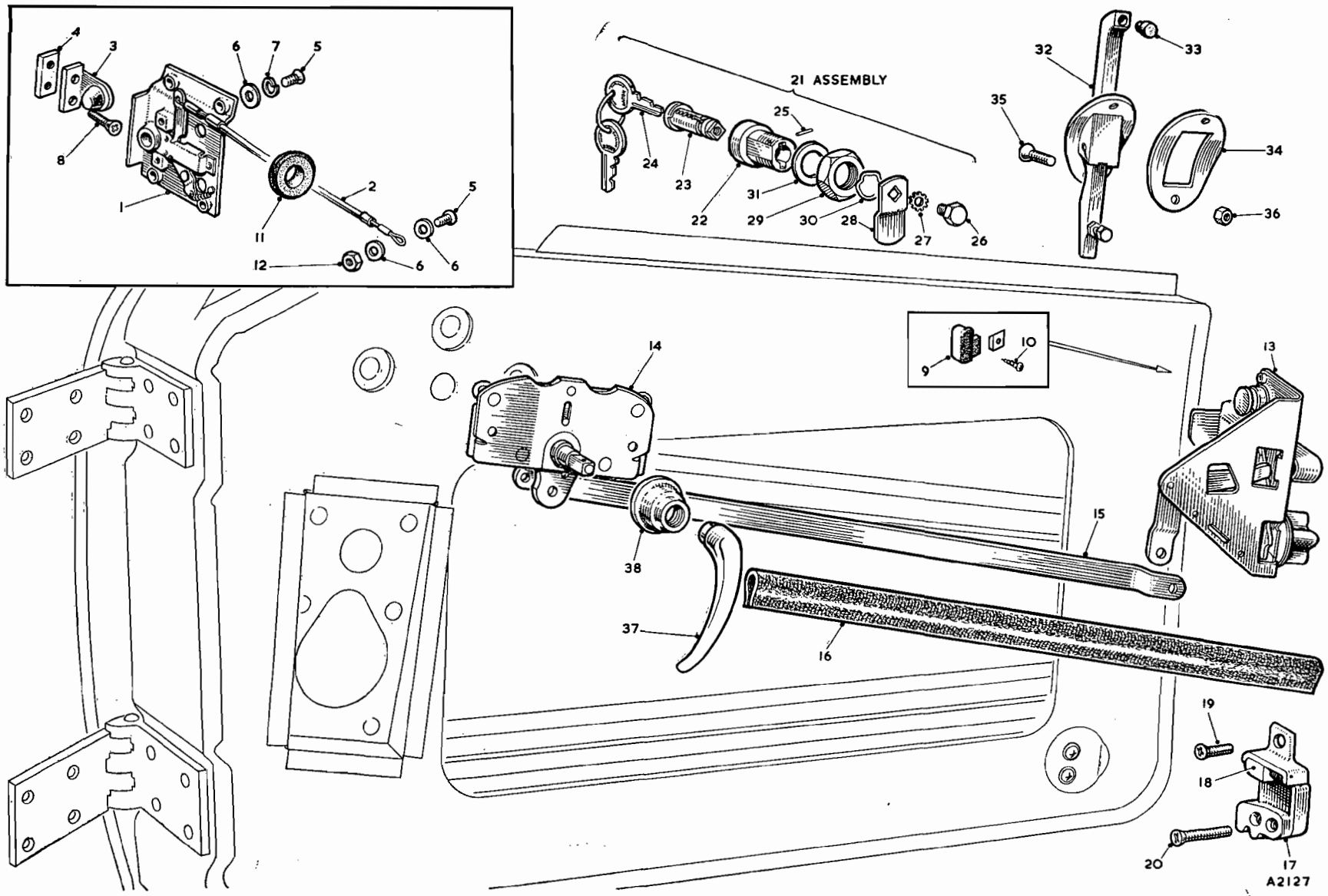

To face page R.14

Item No.	DESCRIPTION	Commencing (C) 10101 Part Number	Illus. No.	Qty. per Vehicle RHD	Qty. per Vehicle LHD	Unit of Issue	Type of Vehicle	MODIFICATIONS New Part Number	MODIFICATIONS Change Point	MODIFICATIONS Amdt. No.	REMARKS
	DOOR FITTINGS										
1	**Lock assembly—R/H door**	**AFH1682**	**RE1**	**1**	**1**						
2	**Lock assembly—L/H door**	**AFH1683**		**1**	**1**						
3	Cable—operating	7H9958	RE2	2	2						
4	Striking plate—door lock	AFH1684	RE3	2	2						
5	Tapping plate—striker	AFH1685	RE4	2	2						
6	Screw fixing lock to door/cable	PPZ0308	RE5	10	10						
7	Washer (plain) for lock and cable	PWZ203	RE6	12	12		Tourer				
8	Washer (spring)	LWZ203	RE7	8	8						
9	Screw fixing striker to body	CPZ0412	RE8	4	4						
10	Screw fixing lock to door	PTZ603		4	4						
11	Buffer assembly—door	MB19556	RE9	4	4						
12	Screw fixing buffer to body	AJD2245Z	RE10	4	4						
13	Grommet (rubber) for door lock release	RFN110	RE11	2	2						
14	Nut for door lock cable	FNZ103	RE12	2	2						
15	**Lock assembly—R/H door**	**AFH3894**		**1**	**1**						
16	**Lock assembly—L/H door**	**AFH3895**		**1**	**1**						
17	Lock—R/H	17H9736	RE13	1	1						
18	Lock—L/H	17H9737		1	1						
19	Remote-control mechanism—R/H	17H9738	RE14	1	1						
20	Remote control mechanism—L/H	17H9739		1	1						
21	Link—connecting	17H9740	RE15	2	2						
22	Sleeve—anti-rattle	17H9735	RE16	2	2						
23	Washer (rubber)	17H9742		4	4						
24	Rivet	17H9743		4	4						
25	Plate—striker—door lock—R/H	AFH3896	RE17	1	1						
26	Plate—striker—door lock—L/H	AFH3897		1	1						
27	Plate—tapping—striker	AFH3792	RE18	2	2						
28	Screw fixing door lock striker to body	CPZ0412	RE19	2	2						
29	Screw fixing door lock striker to body	CPZ0420	RE20	4	4						
30	**Lock assembly—private**	**AFH3893**	**RE21**	**1**	**1**						
31	Housing—lock	AKC458	RE22	1	1		Coupé				
32	Cylinder—lock, complete with keys	17H9745	RE23	1	1						
33	Key	ANK4646	RE24	2	2						
34	Peg—retaining	17H9930	RE25	1	1						
35	Latch bolt	AKC453	RE26	1	1						
36	Washer for bolt	17H9741	RE27	1	1						
37	Latch	17H9744	RE28	1	1						
38	Locknut	AKC455	RE29	1	1						
39	Washer (waved)	AKC454	RE30	1	1						
40	Washer—seating	AKC451	RE31	1	1						
41	**Handle assembly—door—outside**	**AFH3796**	**RE32**	**2**	**2**						
42	Rubber insert—outside door handle	17H9989	RE33	2	2						
43	Washer—seating	AFH4513	RE34	2	2						
44	Screw fixing handles to door	RMP0308	RE35	4	4						
45	Nut for screw	LNZ203	RE36	4	4						
46	**Handle—door—inside**	**ADH5482**	**RE37**	**2**	**2**						
47	Escutcheon assembly—inside handle	ADB709	RE38	2	2						

Item No.	DESCRIPTION	Commencing (C) 10101 Part Number	Illus. No.	Qty. per Vehicle RHD	Qty. per Vehicle LHD	Unit of Issue	Type of Vehicle	MODIFICATIONS New Part Number	MODIFICATIONS Change Point	MODIFICATIONS Amdt. No.	REMARKS
	WINDOWS—SIDE										
1	**Side-curtain assembly—R/H**	**AFH1742**		1	1				**Fin. (C) 10500**		**State colour**
2	**Side-curtain assembly—L/H**	**AFH1743**	**RF1**	1	1						
3	**Side-curtain assembly—R/H—Black**			1	1			**AKE1764**			
4	**Side-curtain assembly—R/H—Ice Blue**			1	1			**AKE1765**	**Com. (C) 10501**		
5	**Side-curtain assembly—L/H—Black**			1	1			**AKE1766**			
6	**Side-curtain assembly—L/H—Ice Blue**			1	1			**AKE1767**			
7	Frame assembly—R/H	AFH2660		1	1		Tourer				
8	Frame assembly—L/H	AFH2661		1	1						
9	Frame—signalling flap	AFH2662		2	2						
10	Panel—sidescreen	AFH2663		2	2						
11	Panel—signalling flap	AFH2664		2	2						
12	**Closing device—flap**	**AFH2666**		2	2						
13	Fork end	AFH2677		1	1						
14	Spring	AFH2680		1	1						
15	**Frame and ventilator assembly—window—door—R/H**	**AFH3802**		1	1						
16	**Frame and ventilator assembly—window—door—L/H**	**AFH3803**		1	1						
17	Channel assembly—frame surround—R/H	AFH4858	RF2	1	1						
18	Channel assembly—frame surround—L/H	AFH4859		1	1						
19	Screw fixing surround channel to vertical channel	RMP0204	RF3	4	4						
20	Channel assembly—vertical—R/H	AFH4860	RF4	1	1						
21	Channel assembly—vertical—L/H	AFH4861		1	1						
22	Strip—felt—surround channel	AFH4862	RF5	2	2						
23	Strip—felt—vertical channel	AFH4863	RF6	2	2						
24	Blending piece—channel—R/H—rear	AFH4864	RF7	1	1						
25	Blending piece—channel—L/H—rear	AFH4865		1	1						
26	Screw fixing blending piece to channel—rear	17H9935	RF8	2	2						
27	**Ventilator assembly—R/H**	**AFH4848**		1	1						
28	**Ventilator assembly—L/H**	**AFH4849**		1	1		Coupé				
29	Frame assembly—vent—R/H	AFH4872	RF9	1	1						
30	Frame assembly—vent—L/H	AFH4873		1	1						
31	Glass	AFH4847	RF10	2	2						
32	Strip—glazing	AFH4874	RF11	2	2						
33	Handle—locking—R/H	AFH6532	RF12	1	1						
34	Handle—locking—L/H	AFH6533		1	1						
35	Bracket for locking handle	AFH6531	RF13	2	2						
36	Pin for locking handle	AFH6534	RF14	2	2						
37	Washer—waved—handle	AFH4875	RF15	4	4						
38	Pivot bolt—vent	AFH4876	RF16	2	2						
39	Sleeve for pivot bolt	AFH4877	RF17	2	2						
40	Spring for pivot bolt	AFH4878	RF18	2	2						
41	Washer (plain)	PWZ204	RF19	4	4						
42	Nut for pivot bolt	LNZ204	RF20	2	2						

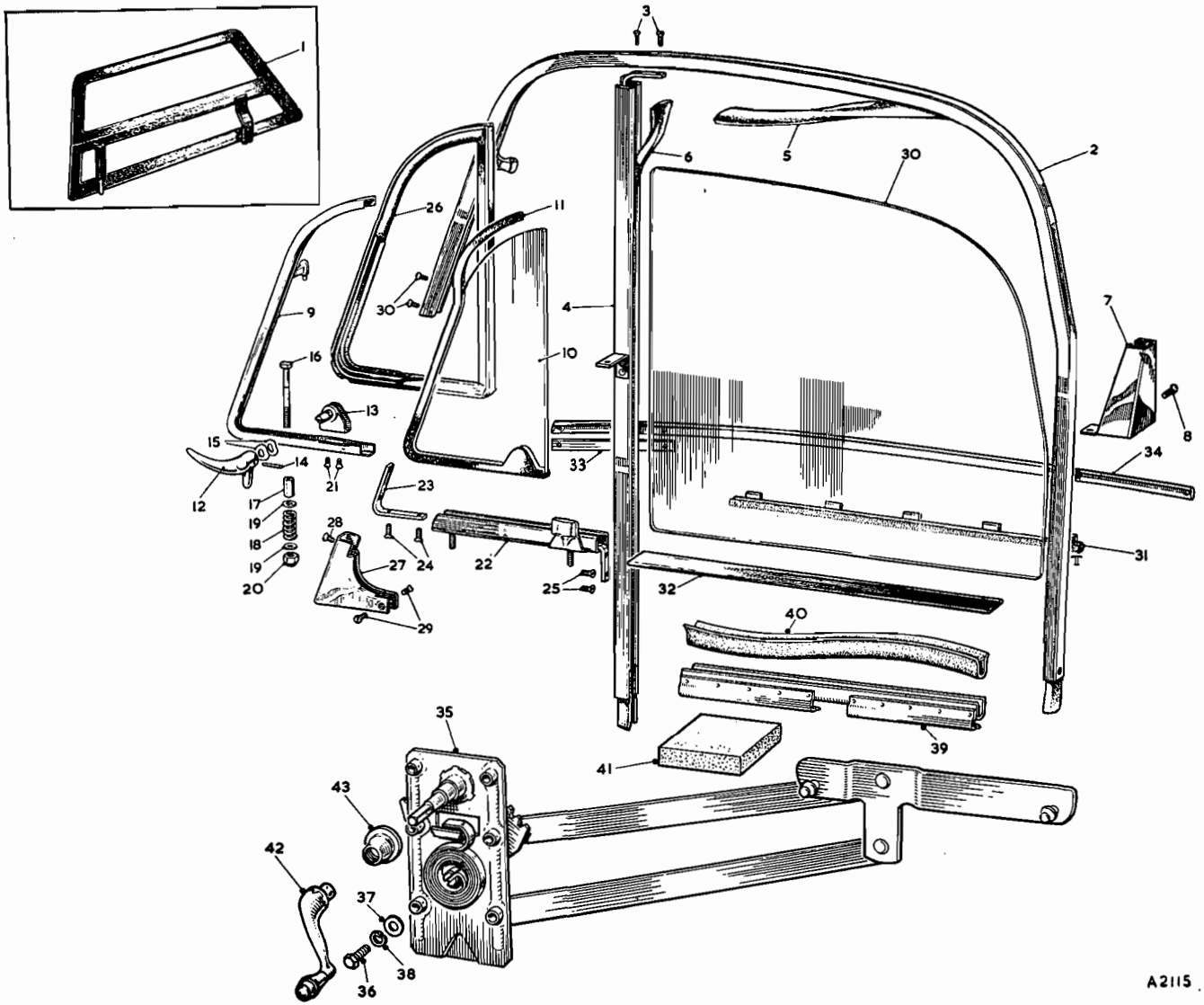

To face page R.15

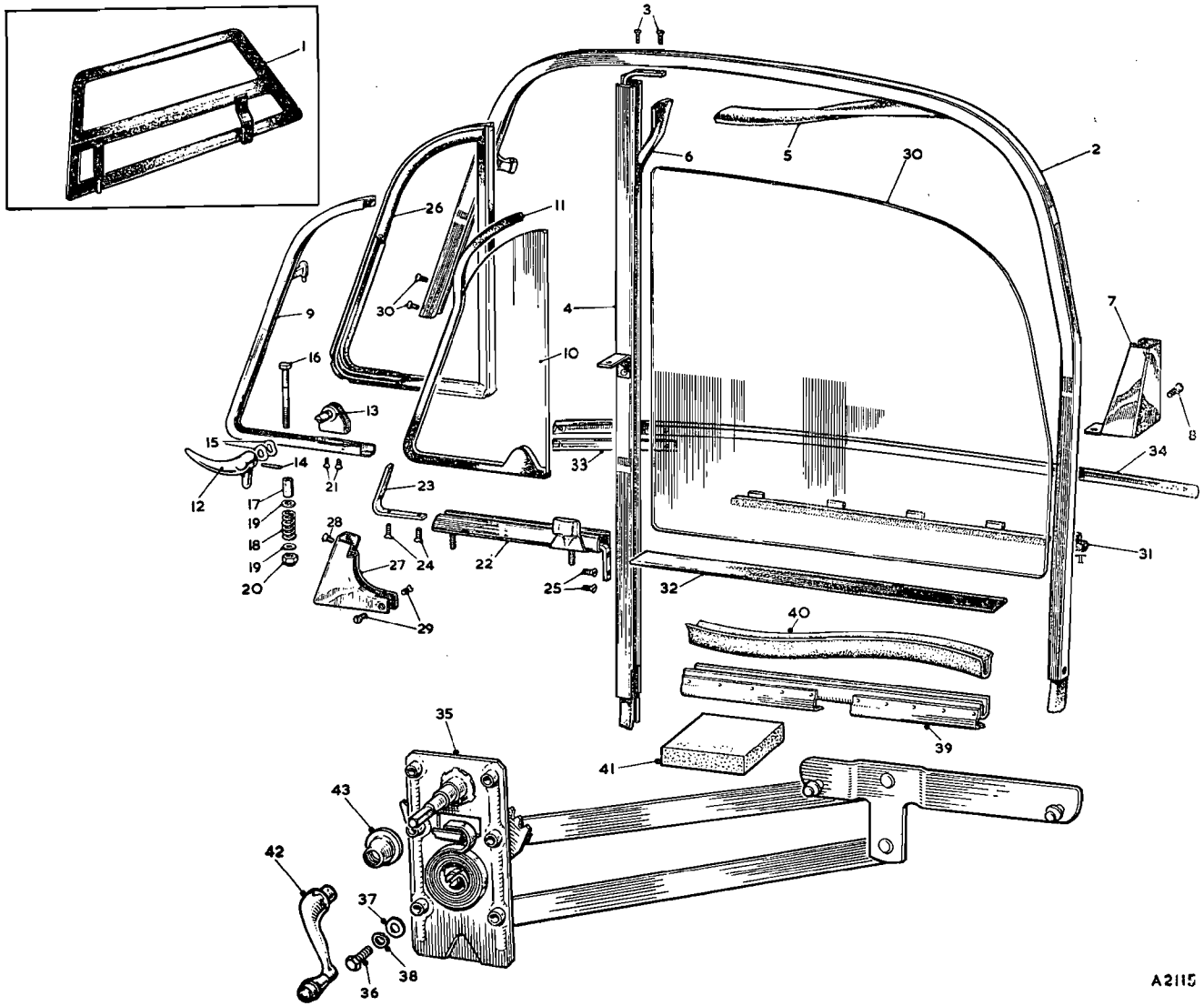
1
2
3
4
5
6
7
8
9
10
11
12
13
14
15
16
17
18
19
19
20
21
22
23
24
25
26
27
28
29
30
30
31
32
33
34
35
36
37
38
39
40
41
42
43
A2115

Item No.	DESCRIPTION	Commencing (C) 20671 Part Number	Illus. No.	Qty. per Vehicle RHD	Qty. per Vehicle LHD	Unit of Issue	Type of Vehicle	MODIFICATIONS New Part Number	MODIFICATIONS Change Point	MODIFICATIONS Amdt. No.	REMARKS
	Windows—Side—*continued*										
1	Screw fixing handle bracket to frame	CMP0204	RF21	4	4						
2	Channel assembly—bottom—ventilator—R/H	AFH4866	RF22	1	1						
3	Channel assembly—bottom—ventilator—L/H	AFH4867		1	1						
4	Bracket—vent corner—front	AFH4868	RF23	2	2						
5	Screw fixing angle bracket—front	CMZ0204	RF24	8	8						
6	Screw fixing angle bracket—rear	CMZ0204	RF25	4	4						
7	Rubber—vent surround—R/H	AFH4870	RF26	1	1						
8	Rubber—vent surround—L/H	AFH4871		1	1						
9	Blending piece—front	AFH4869	RF27	2	2						
10	Screw fixing blending piece to channel—front	17H9934	RF28	2	2						
11	Screw fixing blending piece to vent channel	17H9935	RF29	4	4						
12	**Glass—door**	**AFH4453**	**RF30**	**2**	**2**						
13	Weatherstrip—window frame	AFH4455	RF31	2	2		Coupé				
14	Weatherstrip—garnish rail	AFH4456	RF32	2	2						
15	Packing—weatherstrip finisher	AFH4569	RF33	2	2						
16	Finisher—weatherstrip—R/H door	AFH4458	RF34	1	1						
17	Finisher—weatherstrip—L/H door	AFH4459		1	1						
18	**Regulator assembly—window—R/H**	**AFH3898**	**RF35**	**1**	**1**						
19	**Regulator assembly—window—L/H**	**AFH3899**		**1**	**1**						
20	Screw fixing regulator to mounting bracket	HZS0404	RF36	12	12						
21	Washer (plain)	PWZ204	RF37	12	12						
22	Washer (spring)	LWZ204	RF38	12	12						
23	Channel for door window glass—lower	AFH3900	RF39	2	2						
24	Strip—glazing	AFH4454	RF40	2	2						
25	Buffer for door glass stop	AFH4568	RF41	2	2						
26	**Handle—window regulator**	**ADH5481**	**RF42**	**2**	**2**						
27	Escutcheon assembly—regulator handle	ADB709	RF43	2	2						

Item No.	DESCRIPTION	Commencing (C) 10101 Part Number	Illus. No.	Qty. per Vehicle RHD	Qty. per Vehicle LHD	Unit of Issue	Type of Vehicle	MODIFICATIONS New Part Number	MODIFICATIONS Change Point	MODIFICATIONS Amdt. No.	REMARKS
	BONNET LID FITTINGS										
1	**Hinge—R/H—for bonnet lid**	**AFH1514**	**RG1**	1	1						
2	**Hinge—L/H—for bonnet lid**	**AFH1515**		1	1						
3	Set screw for bonnet hinges	AFH2587	RG2	12	12						
4	Washer for set screw (plain)	PWZ203	RG3	12	12						
5	Washer for set screw (spring)	LWZ203	RG4	12	12						
6	Nut for bonnet hinge screw	FNZ103	RG5	2	2						
7	Rod for bonnet lid support	AFH1755	RG6	1	1						
8	Washer for support rod (plain)	PWZ105	RG7	1	1						
9	Spring for bonnet lid support rod	139282	RG8	1	1						
10	Clip for support rod	AHH5460	RG9	1	1						
11	Screw for clip to lid	PTZ803	RG10	2	2						
12	Buffer for bonnet lid	271601	RG11	10	10						
13	Screw for buffer fixing	PMZ0208	RG12	10	10						
14	Washer for screw (spring)	LWZ202	RG13	10	10						
15	Nut for buffer screw	CNZ102	RG14	10	10						
	BONNET—CATCH AND CONTROL										
16	**Rod for bonnet catch control**	**AFH1757**	**RG15**	1	1						
17	Washer for control rod (spring)	128900	RG16	3	3						
18	Washer for control rod (plain)	PWZ203	RG17	3	3						
19	Grommet for dash panel	133221	RG18	1	1						
20	Plate for grommet retaining	133222	RG19	1	1						
21	Screw for retaining plate to dash	PMZ0208	RG20	2	2						
22	Washer for screw (plain)	PWZ202	RG21	2	2						
23	Washer for screw (spring)	LWZ202	RG22	2	2						
24	Nut for plate to dash screw	CNZ102	RG23	2	2						
25	Spring for bonnet catch (anti-rattle)	95219	RG24	1	1						
26	Tension plate for anti-rattle spring	ADA2463	RG25	1	1						
27	Rod for lever to slider control	133213	RG26	1	1						
28	Lever for control rod	AFH1654	RG27	1	1						
29	Bolt for control rod lever pivot	AFH1655	RG28	1	1						
30	Distance tube for pivot bolt	AFH1675	RG29	1	1						
31	Nut for pivot bolt	LNZ103	RG30	1	1						
32	Slider support assembly	ADH456	RG31	1	1						
33	Slider for bonnet catch	ADA461	RG32	1	1						
34	Guide plate for bonnet catch	ADA463	RG33	1	1						
35	Distance tube for bonnet catch	ADA464	RG34	2	2						
36	Tension spring for bonnet catch	ADA466	RG35	1	1						
37	Bolt for catch to body	HBZ0408	RG36	2	2						
38	Washer for bolt (spring)	LWZ204	RG37	2	2						

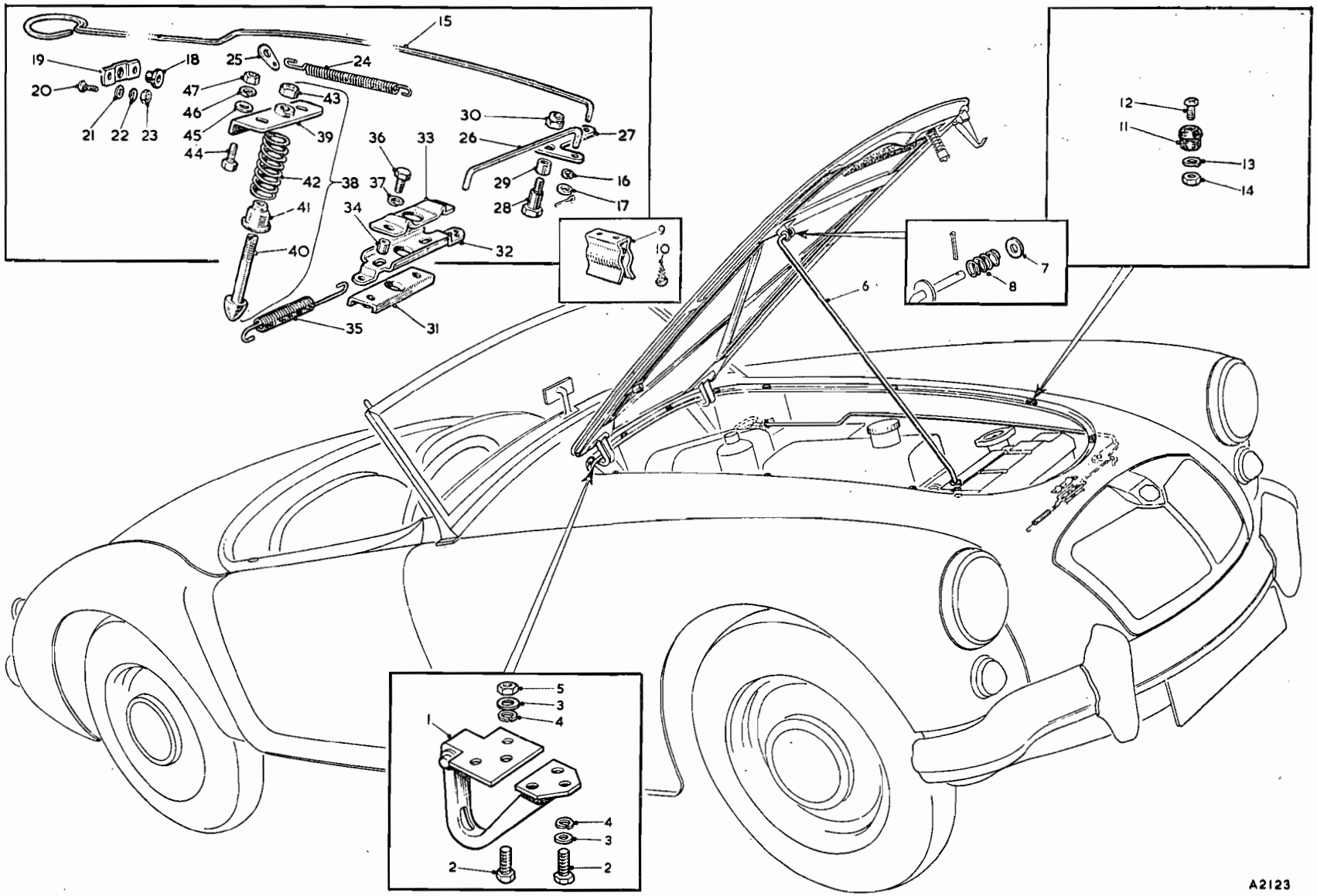

To face page R.17

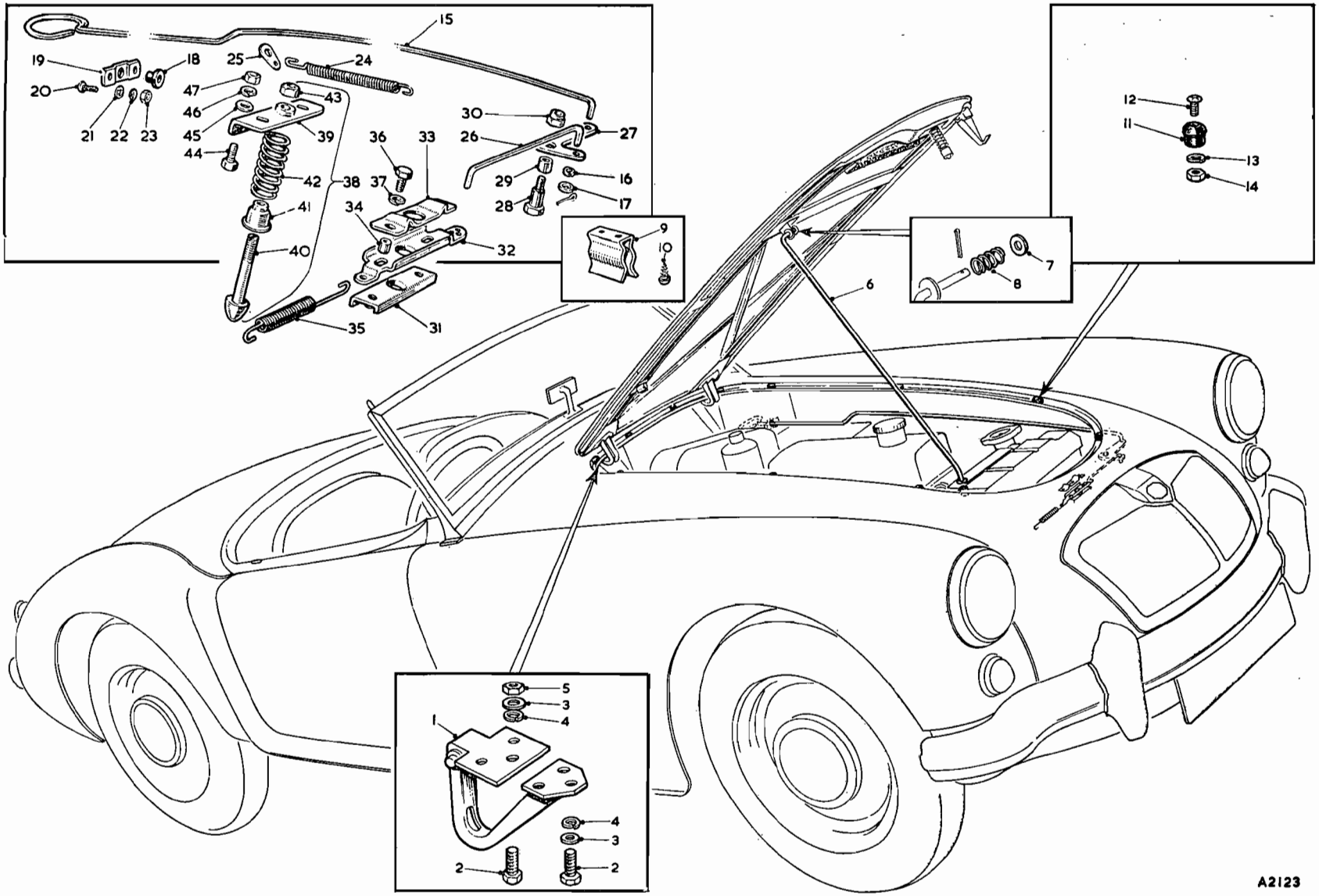
15
19
18
25
24
20
47
43
46
30
27
21 22 23
45
39
36
33
26
44
42
38
37
29
16
41
34
28
17
40
32
9
10
12
11
13
14
7
8
6
35
31
5
3
4
1
4
3
2
2
A2123

Item No.	DESCRIPTION	Commencing (C) 10101 Part Number	Illus. No.	Qty. per Vehicle RHD	Qty. per Vehicle LHD	Unit of Issue	Type of Vehicle	MODIFICATIONS New Part Number	MODIFICATIONS Change Point	MODIFICATIONS Amdt. No.	REMARKS
	Bonnet—Catch and Control—*continued*										
1	**Striker pin assembly**	**AFH1739**	**RG38**	1	1						
2	Bracket	ADH4869	RG39	1	1						
3	Pin	ADC2781	RG40	1	1						
4	Cup for spring retaining	ADA458	RG41	1	1						
5	Spring	14B2846	RG42	1	1						
6	Nut	FNZ206	RG43	1	1						
7	Set screw for striker pin to lid	HZS0405	RG44	2	2						
8	Washer for screw (plain)	PWZ204	RG45	2	2						
9	Washer for screw (spring)	LWZ204	RG46	2	2						
10	Nut for striker pin set screw	FNZ104	RG47	2	2						

Item No.	DESCRIPTION	Commencing (C) 10101 Part Number	Illus. No.	Qty. per Vehicle RHD	Qty. per Vehicle LHD	Unit of Issue	Type of Vehicle	MODIFICATIONS New Part Number	MODIFICATIONS Change Point	MODIFICATIONS Amdt. No.	REMARKS
	NUMBER-PLATES AND FITTINGS										
1	**Front number-plate**	**ACH5835**	**RH1**	1	1						
2	Screw fixing plate to bracket	PMZ0410	RH2	2	2						
3	Washer (spring)—plate to bracket	LWZ204	RH3	2	2						
4	Nut for plate to bracket screw	FNZ104	RH4	2	2						
5	Bracket—R/H—number-plate	AHH5161	RH5	1	1						
6	Bracket—L/H—number-plate	AHH5162	RH6	1	1						
7	Screw fixing brackets to bumper	PMZ0408	RH7	2	2						
8	Washer (spring)—brackets to bumper	LWZ204	RH8	2	2						
9	Nut for bracket to bumper screw	FNZ104	RH9	2	2						
10	**Rear number-plate**	**ADG474**	**RH10**	1	1						
11	Lamp bracket	136271	RH11	1	1						
12	Bracket for number-plate mounting	AHH5151	RH12	1	1						
13	Rubber washer for number-plate	500946	RH13	4	4						
14	Screw fixing lamp bracket to mounting bracket	HZS0505	RH14	2	2						
15	Washer (plain)—bracket to bracket screw	PWZ105	RH15	2	2						
16	Washer (spring)—bracket to bracket screw	LWZ205	RH16	2	2	24					
17	Locknut for bracket to bracket screw	FNZ205	RH17	2	2						
18	Washer—packing—number-plate to bracket	AHH5712	RH18	2	2						
19	Screw fixing number-plate to bracket	PMZ0410	RH19	2	2						
20	Washer (plain)—plate to bracket	PWZ104	RH20	2	2						
21	Washer (spring)—plate to bracket	LWZ204	RH21	2	2						
22	Nut for number-plate to bracket screw	FNZ104	RH22	2	2						
23	Support—number-plate	AHA5211			1						North America only

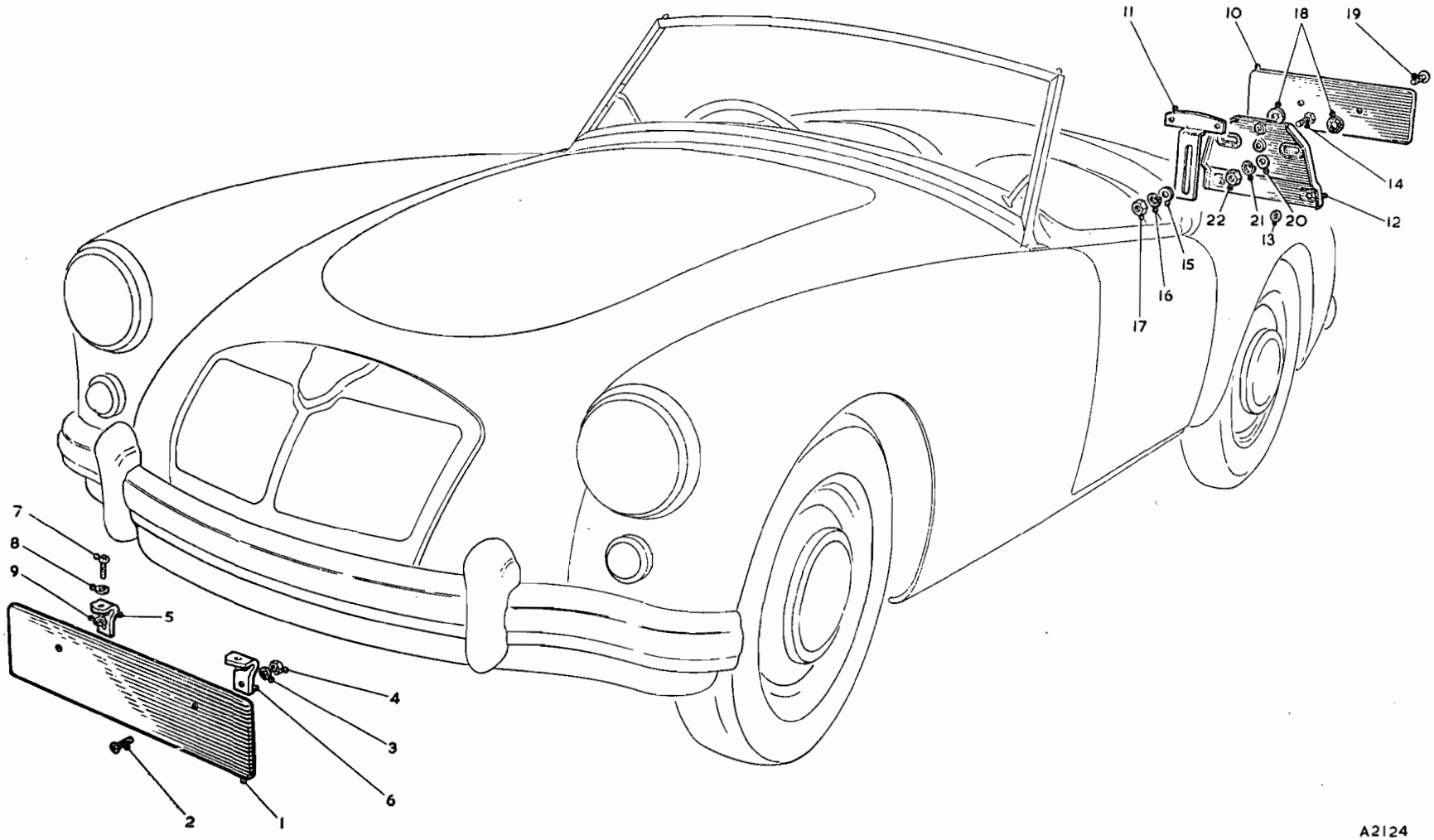

To face page R.19

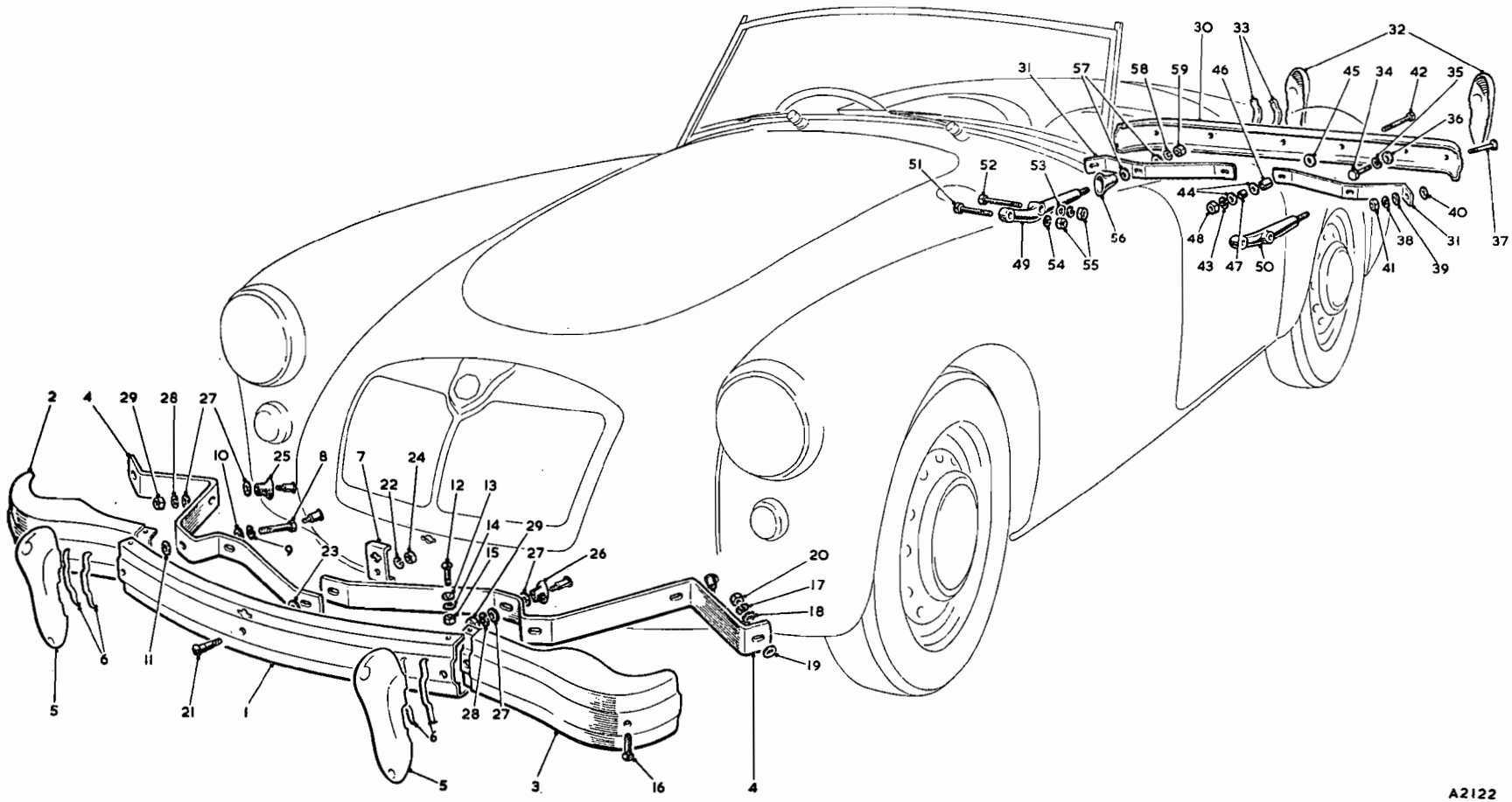

To face page R.20

Item No.	DESCRIPTION	Commencing (C) 10101 Part Number	Illus. No.	Qty. per Vehicle RHD	Qty. per Vehicle LHD	Unit of Issue	Type of Vehicle	MODIFICATIONS New Part Number	MODIFICATIONS Change Point	MODIFICATIONS Amdt. No.	REMARKS
	BUMPERS AND FITTINGS										
1	**Front bumper assembly**	**N.S.P.**									
2	Centre bar	AHH5474	RJ1	1	1						
3	Corner bar—R/H	AHH5486	RJ2	1	1						
4	Corner bar—L/H	AHH5487	RJ3	1	1						
5	Main spring	AHH5476	RJ4	2	2						
6	**Over-rider assembly**	**AHH5478**	**RJ5**	**2**	**2**						
7	P.V.C. moulding (4½")	AHH5488	RJ6	4	4						
8	Bracket for starting-handle	AHH5477	RJ7	1	1						
9	Bolt fixing over-rider to bumper bar	HBZ0620	RJ8	2	2						
10	Washer (spring) for over-rider to bumper bolt	LWZ206	RJ9	2	2						
11	Washer (plain) for over-rider to bumper bolt	PWZ106	RJ10	2	2						
12	Washer (special plain) for over-rider to bumper bolt	AHH5494	RJ11	2	2						
13	Bolt fixing corner bar to centre bar	AHH5491	RJ12	2	2						
14	Washer (special plain) for corner to centre bar bolt	AHH5492	RJ13	2	2						
15	Washer (spring) for corner to centre bar bolt	LWZ205	RJ14	2	2	24					
16	Nut for corner to centre bar bolt	FNZ105	RJ15	2	2						
17	Bolt fixing mainspring to corner bar	AHH5480	RJ16	2	2						
18	Washer (spring) for mainspring to corner bar bolt	LWZ206	RJ17	2	2						
19	Washer (plain) for mainspring to corner bar bolt	PWZ106	RJ18	2	2						
20	Washer (special plain) for mainspring to corner bar bolt	AHH5494	RJ19	2	2						
21	Nut for mainspring to corner bar bolt	FNZ106	RJ20	2	2						
22	Bolt fixing mainspring to centre	AHH5479	RJ21	1	1						
23	Washer (spring) for mainspring to centre bolt	LWZ206	RJ22	1	1						
24	Washer (special plain) for mainspring to centre bolt	AHH5494	RJ23	1	1						
25	Nut for mainspring to centre bolt	FNZ106	RJ24	1	1						
26	Grommet for outer stud	AHH5163	RJ25	2	2						
27	Grommet for inner stud	AHH5164	RJ26	2	2						
28	Washer (plain)	PWZ208	RJ27	8	8						
29	Washer (spring)	LWZ208	RJ28	4	4						
30	Nut for bumper support stud	FNZ108	RJ29	4	4						
31	**Rear bumper assembly**	**N.S.P.**									
32	Bumper bar	AHH5481	RJ30	1	1						
33	Mainspring	AHH5482	RJ31	2	2						
34	**Over-rider assembly**	**AHH5478**	**RJ32**	**2**	**2**						
35	P.V.C. moulding (4½")	AHH5488	RJ33	4	4						
36	Bolt fixing over-rider to bumper bar	HBZ0616	RJ34	2	2						
37	Washer (spring) for over-rider to bumper bolt	LWZ206	RJ35	2	2						
38	Washer (special plain) for over-rider to bumper bolt	AHH5494	RJ36	2	2						
39	Bolt—outer—fixing mainspring to bar	AHH5480	RJ37	2	2						
40	Washer (spring) for mainspring to bar bolt	LWZ206	RJ38	2	2						
41	Washer (plain) for mainspring to bar bolt	PWZ106	RJ39	2	2						
42	Washer (special plain) for mainspring to bar bolt	AHH5494	RJ40	2	2						
43	Nut for mainspring to bar bolt	FNZ106	RJ41	2	2						

Item No.	DESCRIPTION	Commencing (C) 10101		Qty. per Vehicle		Unit of Issue	Type of Vehicle	MODIFICATIONS			REMARKS
		Part Number	Illus. No.	RHD	LHD			New Part Number	Change Point	Amdt. No.	
	Bumpers and Fittings—*continued*										
1	Bolt—inner—fixing mainspring to bar	AHH5485	RJ42	2	2						
2	Washer (spring) for mainspring to bar bolt	LWZ206	RJ43	2	2						
3	Washer (plain) for mainspring to bar bolt	PWZ206	RJ44	4	4						
4	Washer (special plain) for mainspring to bar bolt	AHH5494	RJ45	2	2						
5	Distance piece for mainspring to bar bolt	AHH5483	RJ46	2	2						
6	Distance tube for mainspring to bar bolt	AHH5484	RJ47	2	2						
7	Nut for mainspring to bar bolt	FNZ106	RJ48	2	2						
8	**Bracket—R/H—rear bumper mounting**	**AHH5093**	**RJ49**	**1**	**1**						
9	**Bracket—L/H—rear bumper mounting**	**AHH5094**	**RJ50**	**1**	**1**						
10	Bolt fixing bracket to frame	HBZ0730	RJ51	2	2						
11	Bolt fixing bracket to frame	HBZ0732	RJ52	2	2						
12	Washer (plain)	PWZ107	RJ53	2	2						
13	Washer (spring)	LWZ207	RJ54	4	4						
14	Nut for bracket to frame bolt	FNZ107	RJ55	4	4						
15	Grommet (rubber) for bracket	130383	RJ56	2	2						
16	Washer (plain) for bracket and bumper stud	PWZ208	RJ57	4	4						
17	Washer (spring) for bracket and bumper stud	LWZ208	RJ58	2	2						
18	Nut for bracket and bumper stud	FNZ108	RJ59	2	2						

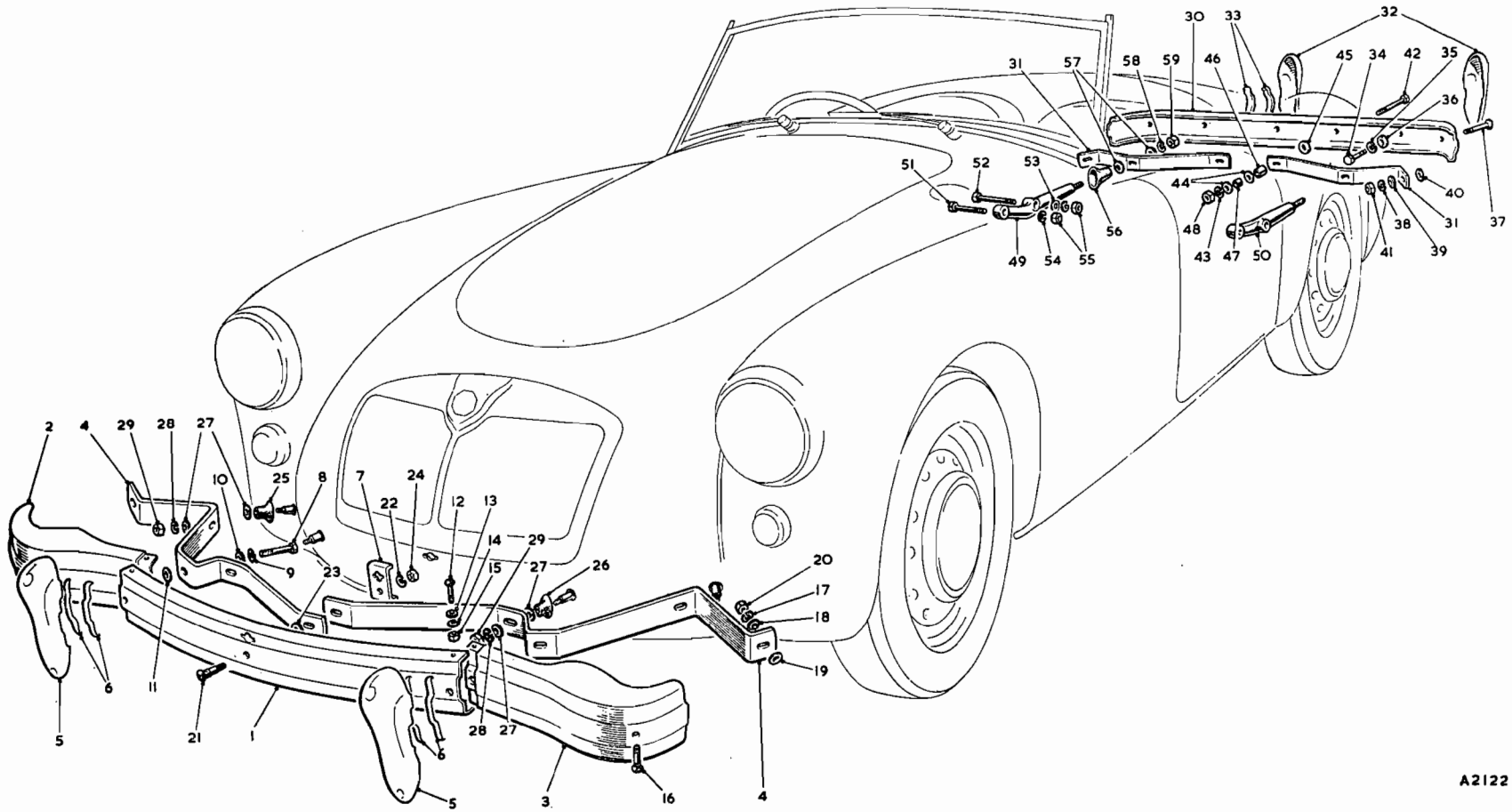

To face page R.21

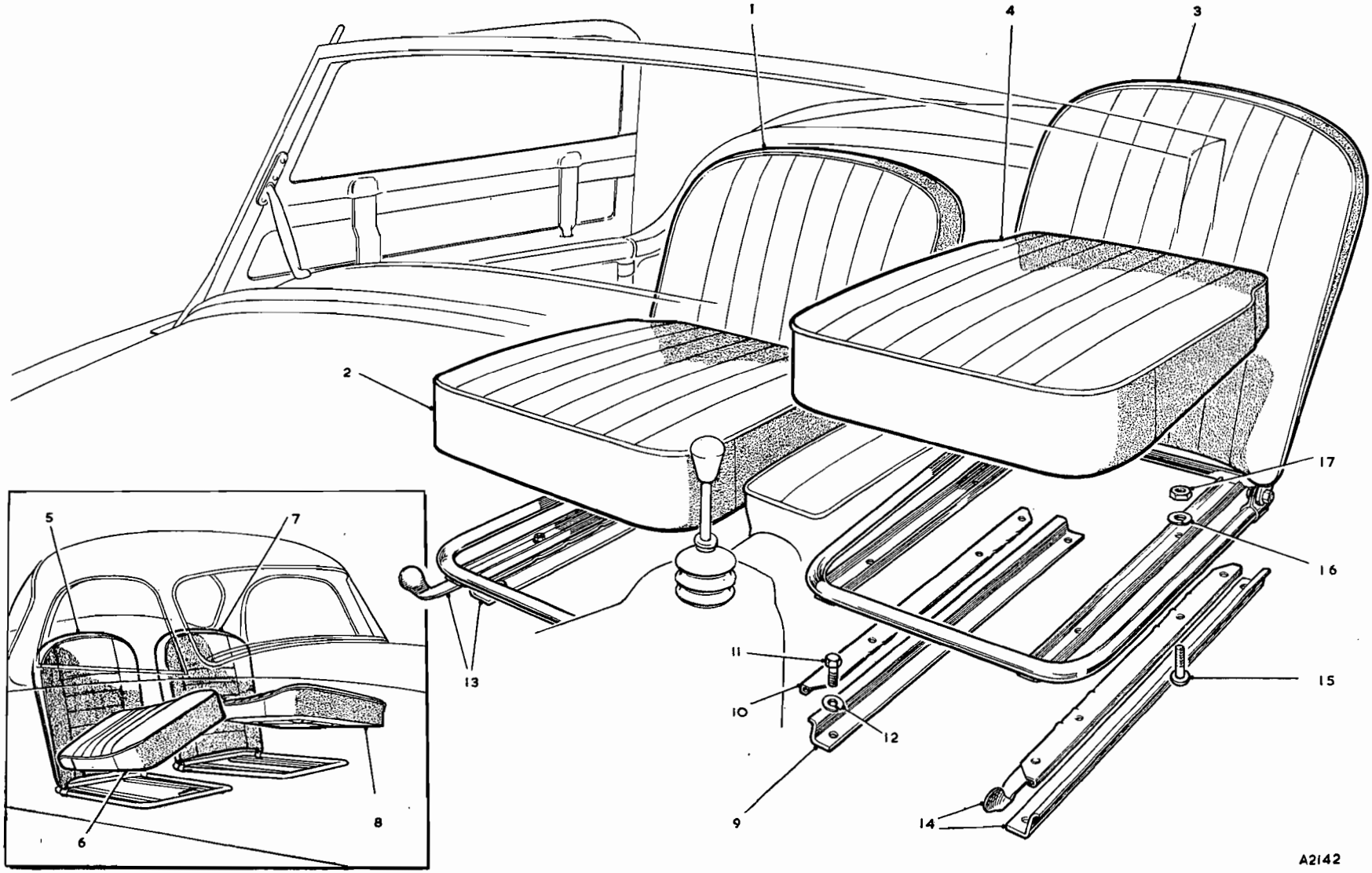

To face page R.22

Item No.	DESCRIPTION	Commencing (C) 10101 Part Number	Illus. No.	Qty. per Vehicle RHD	Qty. per Vehicle LHD	Unit of Issue	Type of Vehicle	MODIFICATIONS New Part Number	MODIFICATIONS Change Point	MODIFICATIONS Amdt. No.	REMARKS
	SEAT AND SEAT FITTINGS										
1	**Seat assembly—bucket—less cushion—R/H—Red**	**AFH2456**	**RK1**	1	1						
2	**Seat assembly—bucket—less cushion—R/H—Green**	**AFH5848**		1	1						
3	**Seat assembly—bucket—less cushion—R/H—Grey**	**AFH5850**		1	1						
4	**Seat assembly—bucket—less cushion—R/H—Black with Red piping**	**AFH5852**		1	1						
5	**Seat assembly—bucket—less cushion—R/H—Black with Green piping**	**AFH5854**		1	1						
6	**Seat assembly—bucket—less cushion—R/H—Black with Grey piping**	**AFH5856**		1	1						
7	**Seat assembly—bucket—less cushion—R/H—Black with White piping**	**AFH5858**		1	1						
8	Squab assembly—bucket seat—R/H—Red	AFH2614		1	1						
9	Squab assembly—bucket seat—R/H—Green	AFH5872		1	1						
10	Squab assembly—bucket seat—R/H—Grey	AFH5874		1	1						
11	Squab assembly—bucket seat—R/H—Black with Red piping	AFH5876		1	1						
12	Squab assembly—bucket seat—R/H—Black with Green piping	AFH5878		1	1						
13	Squab assembly—bucket seat—R/H—Black with Grey piping	AFH5880		1	1						
14	Squab assembly—bucket seat—R/H—Black with White piping	AFH5882		1	1		Tourer				
15	Cover assembly—bucket seat squab—R/H—Red	AFH2612		1	1						
16	Cover assembly—bucket seat squab—R/H—Green	AFH6450		1	1						
17	Cover assembly—bucket seat squab—R/H—Grey	AFH6452		1	1						
18	Cover assembly—bucket seat squab—R/H—Black with Red piping	AFH6454		1	1						
19	Cover assembly—bucket seat squab—R/H—Black with Green piping	AFH6456		1	1						
20	Cover assembly—bucket seat squab—R/H—Black with Grey piping	AFH6458		1	1						
21	Cover assembly—bucket seat squab—R/H—Black with White piping	AFH6460		1	1						
22	**Cushion assembly—bucket seat—R/H—Red**	**AFH2458**	**RK2**	1	1						
23	**Cushion assembly—bucket seat—R/H—Green**	**AFH5860**		1	1						
24	**Cushion assembly—bucket seat—R/H—Grey**	**AFH5862**		1	1						
25	**Cushion assembly—bucket seat—R/H—Black with Red piping**	**AFH5864**		1	1						
26	**Cushion assembly—bucket seat—R/H—Black with Green piping**	**AFH5866**		1	1						
27	**Cushion assembly—bucket seat—R/H—Black with Grey piping**	**AFH5868**		1	1						
28	**Cushion assembly—bucket seat—R/H—Black with White piping**	**AFH5870**		1	1						

Item No.	DESCRIPTION	Commencing (C) 10101 Part Number	Illus. No.	Qty. per Vehicle RHD	Qty. per Vehicle LHD	Unit of Issue	Type of Vehicle	MODIFICATIONS New Part Number	MODIFICATIONS Change Point	MODIFICATIONS Amdt. No.	REMARKS
	Seat and Seat Fittings—*continued*										
1	Cover assembly—bucket seat cushion—R/H—Red	AFH2610		1	1						
2	Cover assembly—bucket seat cushion—R/H—Green	AFH5884		1	1						
3	Cover assembly—bucket seat cushion—R/H—Grey	AFH5886		1	1						
4	Cover assembly—bucket seat cushion—R/H—Black with Red piping	AFH5888		1	1						
5	Cover assembly—bucket seat cushion—R/H—Black with Green piping	AFH5890		1	1						
6	Cover assembly—bucket seat cushion—R/H—Black with Grey piping	AFH5892		1	1						
7	Cover assembly—bucket seat cushion—R/H—Black with White piping	AFH5894		1	1						
8	**Seat assembly—bucket—less cushion—L/H—Red**	**AFH2457**	**RK3**	1	1						
9	**Seat assembly—bucket—less cushion—L/H—Green**	**AFH5849**		1	1						
10	**Seat assembly—bucket—less cushion—L/H—Grey**	**AFH5851**		1	1						
11	**Seat assembly—bucket—less cushion—L/H—Black with Red piping**	**AFH5853**		1	1						
12	**Seat assembly—bucket—less cushion—L/H—Black with Green piping**	**AFH5855**		1	1						
13	**Seat assembly—bucket—less cushion—L/H—Black with Grey piping**	**AFH5857**		1	1						
14	**Seat assembly—bucket—less cushion—L/H—Black with White piping**	**AFH5859**		1	1						
15	Squab assembly—bucket seat—L/H—Red	AFH2615		1	1						
16	Squab assembly—bucket seat—L/H—Green	AFH5873		1	1		Tourer				
17	Squab assembly—bucket seat—L/H—Grey	AFH5875		1	1						
18	Squab assembly—bucket seat—L/H—Black with Red piping	AFH5877		1	1						
19	Squab assembly—bucket seat—L/H—Black with Green piping	AFH5879		1	1						
20	Squab assembly—bucket seat—L/H—Black with Grey piping	AFH5881		1	1						
21	Squab assembly—bucket seat—L/H—Black with White piping	AFH5883		1	1						
22	Cover assembly—bucket seat squab—L/H—Red	AFH2613		1	1						
23	Cover assembly—buckct seat squab—L/H—Green	AFH6451		1	1						
24	Cover assembly—bucket seat squab—L/H—Grey	AFH6453		1	1						
25	Cover assembly—bucket seat squab—L/H—Black with Red piping	AFH6455		1	1						
26	Cover assembly—bucket seat squab—L/H—Black with Green piping	AFH6457		1	1						
27	Cover assembly—bucket seat squab—L/H—Black with Grey piping	AFH6459		1	1						
28	Cover assembly—bucket seat squab—L/H—Black with White piping	AFH6461		1	1						

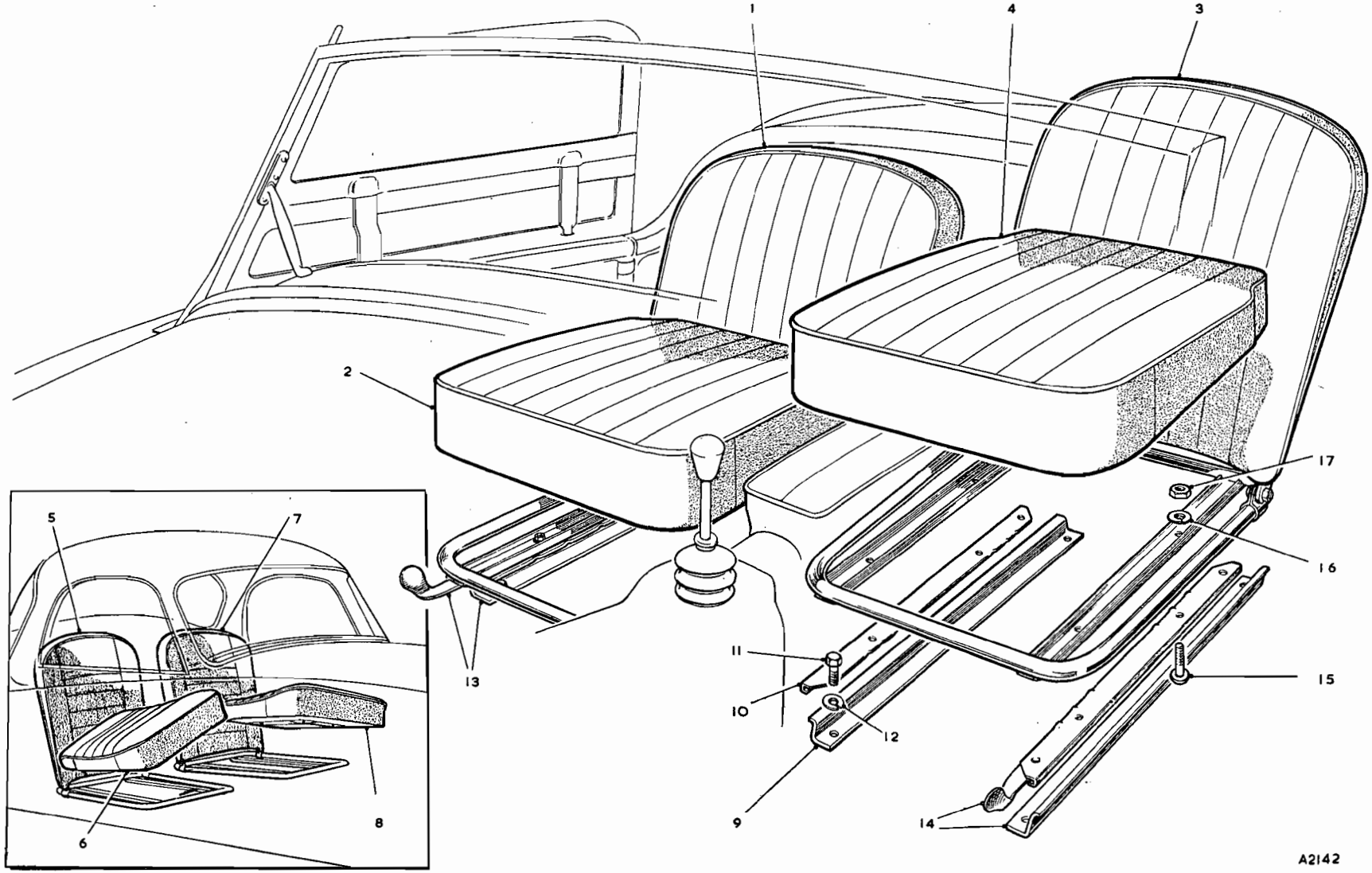

To face page R.23

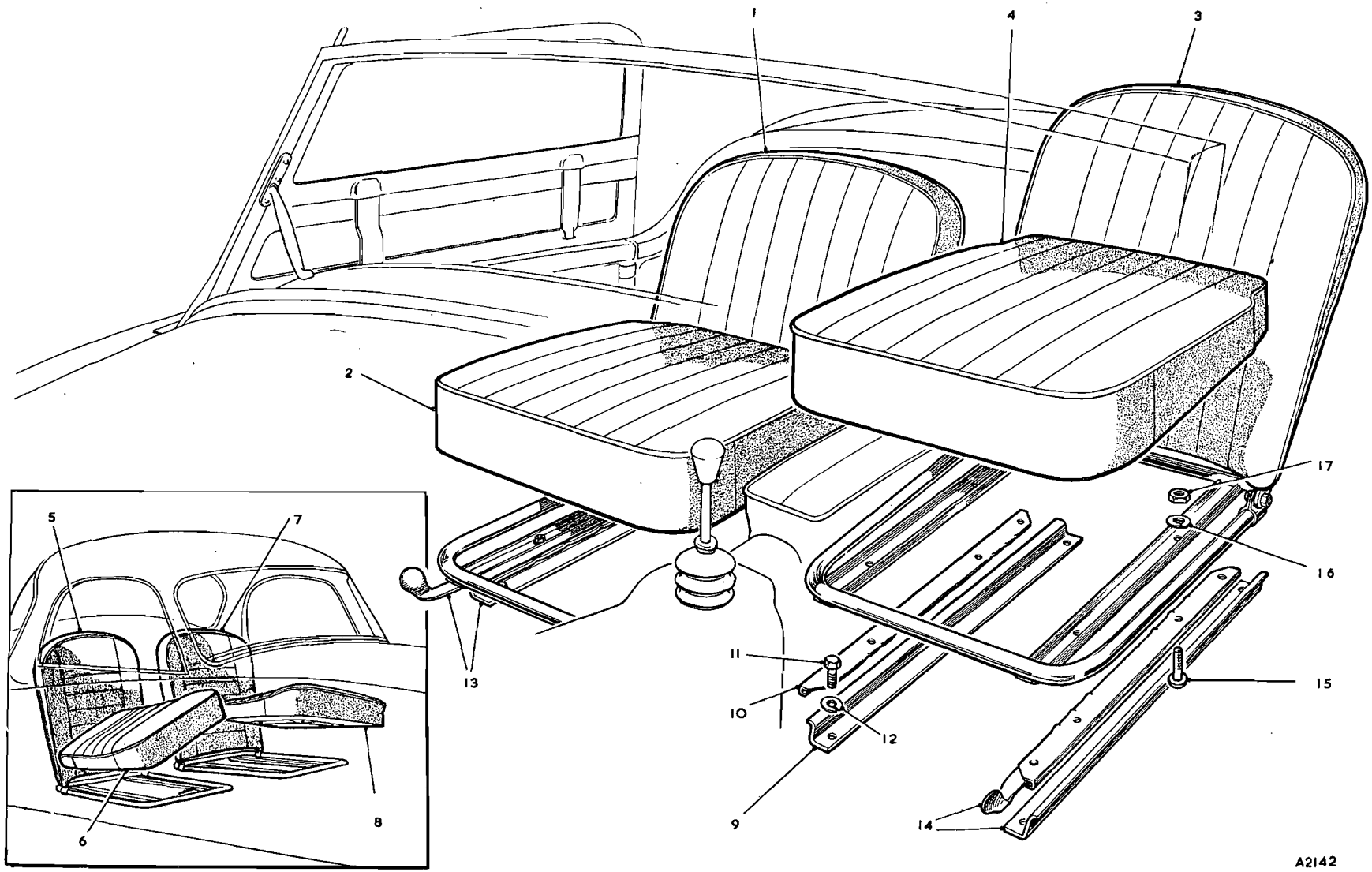

To face page R.24

Item No.	DESCRIPTION	Commencing (C) 10101 Part Number	Illus. No.	Qty. per Vehicle RHD	Qty. per Vehicle LHD	Unit of Issue	Type of Vehicle	MODIFICATIONS New Part Number	MODIFICATIONS Change Point	MODIFICATIONS Amdt. No.	REMARKS
	Seat and Seat Fittings—*continued*										
1	**Cushion assembly—bucket seat—L/H—Red**	**AFH2459**	**RK4**	1	1						
2	**Cushion assembly—bucket seat—L/H—Green**	**AFH5861**		1	1						
3	**Cushion assembly—bucket seat—L/H—Grey**	**AFH5863**		1	1						
4	**Cushion assembly—bucket seat—L/H—Black with Red piping**	**AFH5865**		1	1						
5	**Cushion assembly—bucket seat—L/H—Black with Green piping**	**AFH5867**		1	1						
6	**Cushion assembly—bucket seat—L/H—Black with Grey piping**	**AFH5869**		1	1						
7	**Cushion assembly—bucket seat—L/H—Black with White piping**	**AFH5871**		1	1						
8	Cover assembly—bucket seat cushion—L/H—Red	AFH2611		1	1						
9	Cover assembly—bucket seat cushion—L/H—Green	AFH5885		1	1		Tourer				
10	Cover assembly—bucket seat cushion—L/H—Grey	AFH5887		1	1						
11	Cover assembly—bucket seat cushion—L/H—Black with Red piping	AFH5889		1	1						
12	Cover assembly—bucket seat cushion—L/H—Black with Green piping	AFH5891		1	1						
13	Cover assembly—bucket seat cushion—L/H—Black with Grey piping	AFH5893		1	1						
14	Cover assembly—bucket seat cushion—L/H—Black with White piping	AFH5895		1	1						
15	**Seat assembly—bucket—less cushion—R/H—Red**	**AFH4632**	**RK5**	1	1						
16	**Seat assembly—bucket—less cushion—R/H—Green**	**AFH5490**		1	1						
17	**Seat assembly—bucket—less cushion—R/H—Grey**	**AFH5492**		1	1						
18	**Seat assembly—bucket—less cushion—R/H—Black with Red piping**	**AFH5496**		1	1						
19	**Seat assembly—bucket—less cushion—R/H—Black with Green piping**	**AFH5498**		1	1						
20	**Seat assembly—bucket—less cushion—R/H—Black with White piping**	**AFH5494**		1	1						
21	**Seat assembly—bucket—less cushion—R/H—Black with Blue piping**	**AFH5500**		1	1		Coupé				
22	Squab assembly—bucket seat—R/H—Red	AFH4636		1	1						
23	Squab assembly—bucket seat—R/H—Green	AFH5514		1	1						
24	Squab assembly—bucket seat—R/H—Grey	AFH5516		1	1						
25	Squab assembly—bucket seat—R/H—Black with Red piping	AFH5520		1	1						
26	Squab assembly—bucket seat—R/H—Black with Green piping	AFH5522		1	1						
27	Squab assembly—bucket seat—R/H—Black with White piping	AFH5518		1	1						
28	Squab assembly—bucket seat—R/H—Black with Blue piping	AFH5424		1	1						

Item No.	DESCRIPTION	Commencing (C) 20671 Part Number	Illus. No.	Qty. per Vehicle RHD	Qty. per Vehicle LHD	Unit of Issue	Type of Vehicle	MODIFICATIONS New Part Number	MODIFICATIONS Change Point	MODIFICATIONS Amdt. No.	REMARKS
	Seat and Seat Fittings—*continued*										
1	Cover assembly—bucket seat squab—R/H—Red	AFH4640		1	1						
2	Cover assembly—bucket seat squab—R/H—Green	AFH5538		1	1						
3	Cover assembly—bucket seat squab—R/H—Grey	AFH5540		1	1						
4	Cover assembly—bucket seat squab—R/H—Black with Red piping	AFH5544		1	1						
5	Cover assembly—bucket seat squab—R/H—Black with Green piping	AFH5546		1	1						
6	Cover assembly—bucket seat squab—R/H—Black with White piping	AFH5542		1	1						
7	Cover assembly—bucket seat squab—R/H—Black with Blue piping	AFH5548		1	1						
8	**Cushion assembly—bucket seat—R/H—Red**	**AFH4634**	**RK6**	1	1						
9	**Cushion assembly—bucket seat—R/H—Green**	**AFH5502**		1	1						
10	**Cushion assembly—bucket seat—R/H—Grey**	**AFH5504**		1	1						
11	**Cushion assembly—bucket seat—R/H—Black with Red piping**	**AFH5508**		1	1						
12	**Cushion assembly—bucket seat—R/H—Black with Green piping**	**AFH5510**		1	1						
13	**Cushion assembly—bucket seat—R/H—Black with White piping**	**AFH5506**		1	1						
14	**Cushion assembly—bucket seat—R/H—Black with Blue piping**	**AFH5512**		1	1						
15	Cover assembly—bucket seat cushion—R/H—Red	AFH4638		1	1		Coupé				
16	Cover assembly—bucket seat cushion—R/H—Green	AFH5526		1	1						
17	Cover assembly—bucket seat cushion—R/H—Grey	AFH5528		1	1						
18	Cover assembly—bucket seat cushion—R/H—Black with Red piping	AFH5532		1	1						
19	Cover assembly—bucket seat cushion—R/H—Black with Green piping	AFH5534		1	1						
20	Cover assembly—bucket seat cushion—R/H—Black with White piping	AFH5530		1	1						
21	Cover assembly—bucket seat cushion—R/H—Black with Blue piping	AFH5536		1	1						
22	**Seat assembly—bucket—less cushion—L/H—Red**	**AFH4633**	**RK7**	1	1						
23	**Seat assembly—bucket—less cushion—L/H—Green**	**AFH5491**		1	1						
24	**Seat assembly—bucket—less cushion—L/H—Grey**	**AFH5493**		1	1						
25	**Seat assembly—bucket—less cushion—L/H—Black with Red piping**	**AFH5497**		1	1						
26	**Seat assembly—bucket—less cushion—L/H—Black with Green piping**	**AFH5499**		1	1						
27	**Seat assembly—bucket—less cushion—L/H—Black with White piping**	**AFH5495**		1	1						
28	**Seat assembly—bucket—less cushion—L/H—Black with Blue piping**	**AFH5501**		1	1						

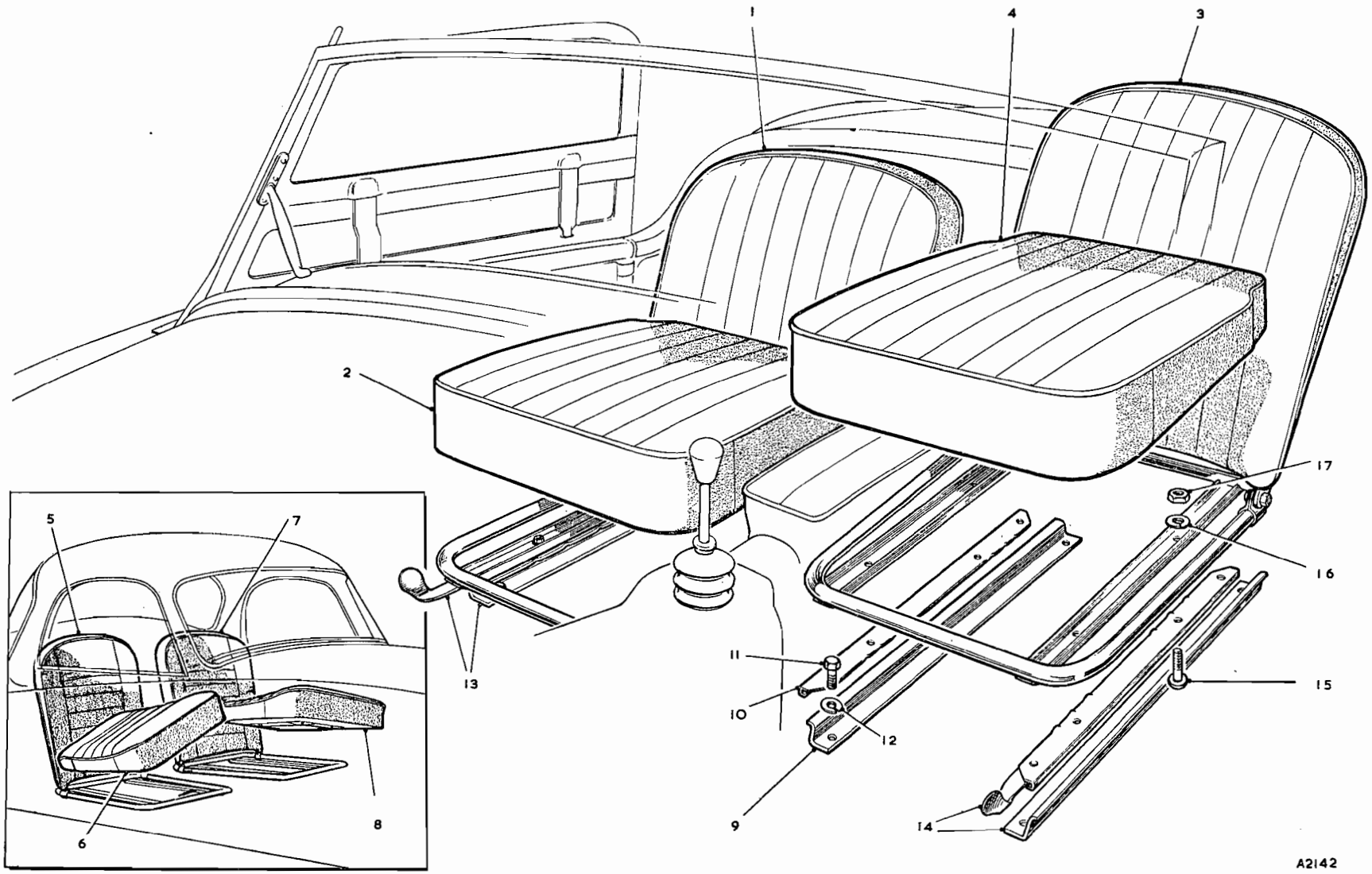

To face page R.25

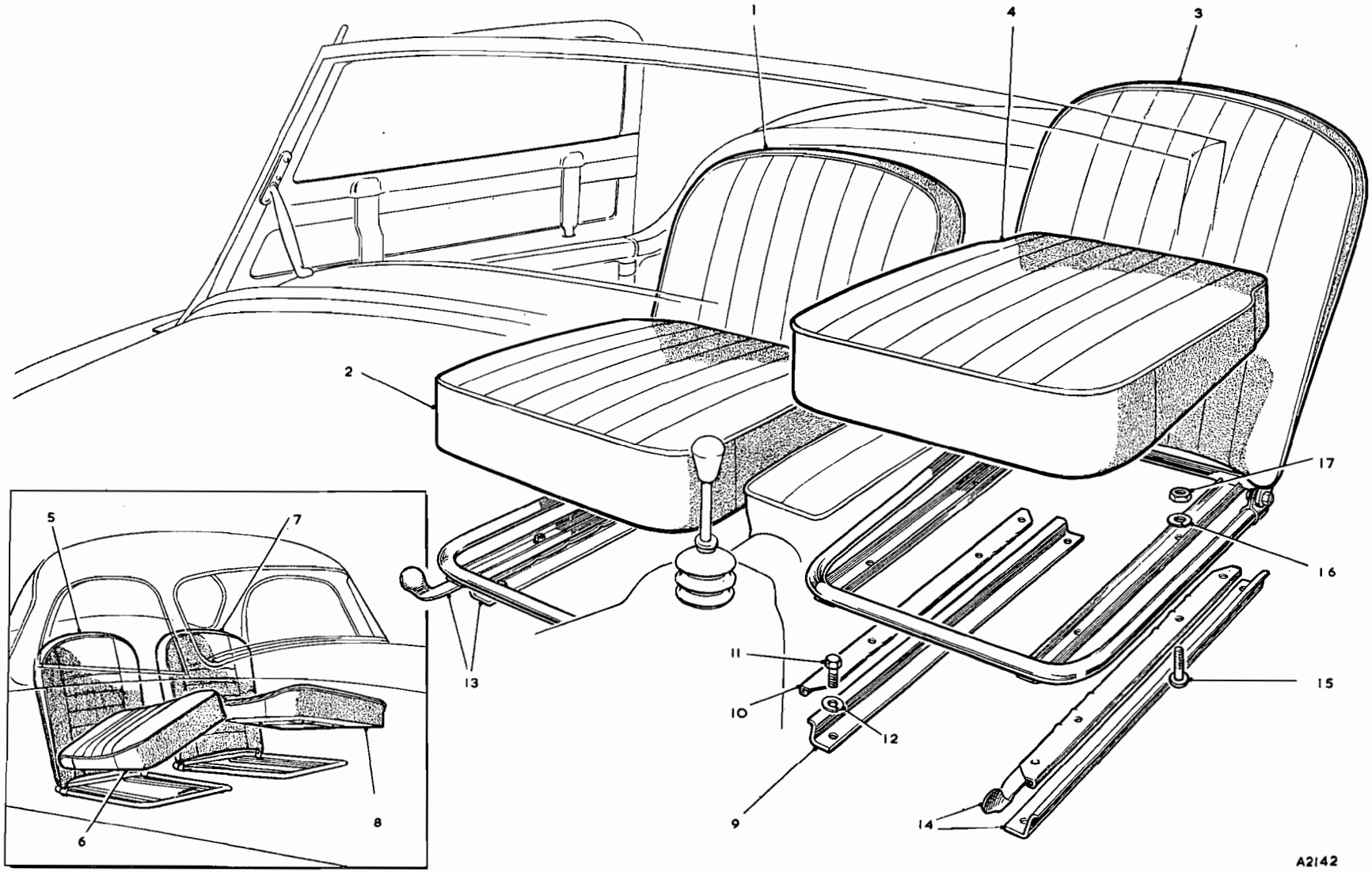

To face page R.26

Item No.	DESCRIPTION	Commencing (C) 20671 Part Number	Illus. No.	Qty. per Vehicle RHD	Qty. per Vehicle LHD	Unit of Issue	Type of Vehicle	MODIFICATIONS New Part Number	MODIFICATIONS Change Point	MODIFICATIONS Amdt. No.	REMARKS
	Seat and Seat Fittings—*continued*										
1	Squab assembly—bucket seat—L/H—Red	AFH4637		1	1						
2	Squab assembly—bucket seat—L/H—Green	AFH5515		1	1						
3	Squab assembly—bucket seat—L/H—Grey	AFH5517		1	1						
4	Squab assembly—bucket seat—L/H—Black with Red piping	AFH5521		1	1						
5	Squab assembly—bucket seat—L/H—Black with Green piping	AFH5523		1	1						
6	Squab assembly—bucket seat—L/H—Black with White piping	AFH5519		1	1						
7	Squab assembly—bucket seat—L/H—Black with Blue piping	AFH5425		1	1						
8	Cover assembly—bucket seat squab—L/H—Red	AFH4641		1	1						
9	Cover assembly—bucket seat squab—L/H—Green	AFH5539		1	1						
10	Cover assembly—bucket seat squab—L/H—Grey	AFH5541		1	1						
11	Cover assembly—bucket seat squab—L/H—Black with Red piping	AFH5545		1	1						
12	Cover assembly—bucket seat squab—L/H—Black with Green piping	AFH5547		1	1						
13	Cover assembly—bucket seat squab—L/H—Black with White piping	AFH5543		1	1		Coupé				
14	Cover assembly—bucket seat squab—L/H—Black with Blue piping	AFH5549		1	1						
15	**Cushion assembly—bucket seat—L/H—Red**	**AFH4635**	**RK8**	1	1						
16	**Cushion assembly—bucket seat—L/H—Green**	**AFH5503**		1	1						
17	**Cushion assembly—bucket seat—L/H—Grey**	**AFH5505**		1	1						
18	**Cushion assembly—bucket seat—L/H—Black with Red piping**	**AFH5509**		1	1						
19	**Cushion assembly—bucket seat—L/H—Black with Green piping**	**AFH5511**		1	1						
20	**Cushion assembly—bucket seat—L/H—Black with White piping**	**AFH5507**		1	1						
21	**Cushion assembly—bucket seat—L/H—Black with Blue piping**	**AFH5513**		1	1						
22	Cover assembly—bucket seat cushion—L/H—Red	AFH4639		1	1						
23	Cover assembly—bucket seat cushion—L/H—Green	AFH5527		1	1						
24	Cover assembly—bucket seat cushion—L/H—Grey	AFH5529		1	1						
25	Cover assembly—bucket seat cushion—L/H—Black with Red piping	AFH5533		1	1						
26	Cover assembly—bucket seat cushion—L/H—Black with Green piping	AFH5535		1	1						
27	Cover assembly—bucket seat cushion—L/H—Black with White piping	AFH5531		1	1						
28	Cover assembly—bucket seat cushion—L/H—Black with Blue piping	AFH5537		1	1						

Item No.	DESCRIPTION	Part Number	Illus. No.	Qty. per Vehicle RHD	Qty. per Vehicle LHD	Unit of Issue	Type of Vehicle	MODIFICATIONS New Part Number	MODIFICATIONS Change Point	MODIFICATIONS Amdt. No.	REMARKS
	Seat and Seat Fittings—*continued*										
1	Seat rail—floor rack	AHH5509	RK9	4	4						
2	Slide—seat catch	AHH5510	RK10	2	2						
3	Screw fixing seat rail to floor	HPZ0405	RK11	8	8						
4	Washer (spring) for rail to floor screw	LWZ204	RK12	8	8						
5	**Slide assembly—R/H seat catch**	**AHH5511**	**RK13**	1	1						
6	**Slide assembly—L/H seat catch**	**AHH5512**	**RK14**	1	1						
7	Screw fixing seat to runner	CMZ0410	RK15	16	16						
8	Washer (spring)	LWZ204	RK16	16	16						
9	Nut for seat to runner screw	FNZ104	RK17	16	16						
	COMPETITION DE-LUXE SEATS (Optional Extra)										
10	**Bucket seat assembly—R/H (Red)**	**AFH5666**		1	1						**When these seats are requested after car delivery AHH5748 and AHH5749 floorboards and 16 off CMZ0420 screw must also be supplied**
11	**Bucket seat assembly—L/H (Red)**	**AFH5667**		1	1						
12	**Bucket seat assembly—R/H (Green)**	**AFH5668**		1	1						
13	**Bucket seat assembly—L/H (Green)**	**AFH5669**		1	1						
14	**Bucket seat assembly—R/H (Grey)**	**AFH5670**		1	1						
15	**Bucket seat assembly—L/H (Grey)**	**AFH5671**		1	1						
16	**Bucket seat assembly—R/H (Black/White)**	**AFH5672**		1	1						
17	**Bucket seat assembly—L/H (Black/White)**	**AFH5673**		1	1						
18	**Bucket seat assembly—R/H (Black/Red)**	**AFH5674**		1	1						
19	**Bucket seat assembly—L/H (Black/Red)**	**AFH5675**		1	1						
20	**Bucket seat assembly—R/H (Black/Green)**	**AFH5676**		1	1						
21	**Bucket seat assembly—L/H (Black/Green)**	**AFH5677**		1	1						
22	**Bucket seat assembly—R/H (Black/Blue)**	**AFH6560**		1	1						
23	**Bucket seat assembly—L/H (Black/Blue)**	**AFH6561**		1	1						
24	Bucket seat frame assembly—R/H	AFH5478		1	1						
25	Bucket seat frame assembly—L/H	AFH5479		1	1						
26	Bucket seat squab—R/H (Red)	AFH5680		1	1						
27	Bucket seat squab—L/H (Red)	AFH5681		1	1						
28	Bucket seat squab—R/H (Green)	AFH5682		1	1						
29	Bucket seat squab—L/H (Green)	AFH5683		1	1						
30	Bucket seat squab—R/H (Grey)	AFH5684		1	1						
31	Bucket seat squab—L/H (Grey)	AFH5685		1	1						
32	Bucket seat squab—R/H (Black/White)	AFH5686		1	1						
33	Bucket seat squab—L/H (Black/White)	AFH5687		1	1						
34	Bucket seat squab—R/H (Black/Red)	AFH5688		1	1						
35	Bucket seat squab—L/H (Black/Red)	AFH5689		1	1						
36	Bucket seat squab—R/H (Black/Green)	AFH5690		1	1						
37	Bucket seat squab—L/H (Black/Green)	AFH5691		1	1						
38	Bucket seat squab—R/H (Black/Blue)	AFH6562		1	1						
39	Bucket seat squab—L/H (Black/Blue)	AFH6563		1	1						

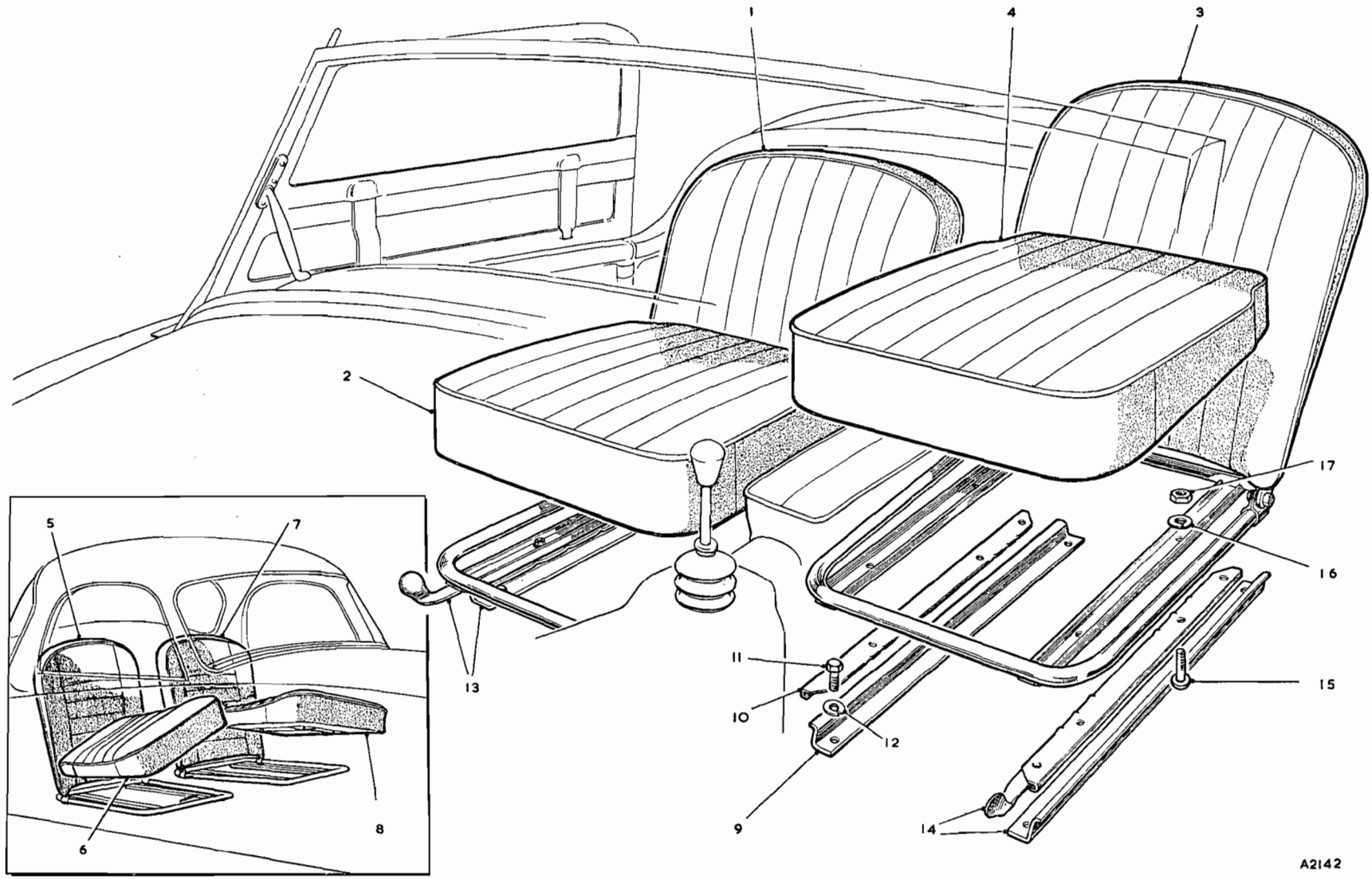

To face page R.27

Item No.	DESCRIPTION	Commencing (C) 10101 Part Number	Illus. No.	Qty. per Vehicle RHD	Qty. per Vehicle LHD	Unit of Issue	Type of Vehicle	MODIFICATIONS New Part Number	MODIFICATIONS Change Point	MODIFICATIONS Amdt. No.	REMARKS
	Seat and Seat Fittings—*continued*										
1	Bucket seat squab cover—R/H (Red)	AFH5708		1	1						
2	Bucket seat squab cover—L/H (Red)	AFH5709		1	1						
3	Bucket seat squab cover—R/H (Green)	AFH5710		1	1						
4	Bucket seat squab cover—L/H (Green)	AFH5711		1	1						
5	Bucket seat squab cover—R/H (Grey)	AFH5712		1	1						
6	Bucket seat squab cover—L/H (Grey)	AFH5713		1	1						
7	Bucket seat squab cover—R/H (Black/White)	AFH5714		1	1						
8	Bucket seat squab cover—L/H (Black/White)	AFH5715		1	1						
9	Bucket seat squab cover—R/H (Black/Red)	AFH5716		1	1						
10	Bucket seat squab cover—L/H (Black/Red)	AFH5717		1	1						
11	Bucket seat squab cover—R/H (Black/Green)	AFH5718		1	1						
12	Bucket seat squab cover—L/H (Black/Green)	AFH5719		1	1						
13	Bucket seat squab cover—R/H (Black/Blue)	AFH6566		1	1						
14	Bucket seat squab cover—L/H (Black/Blue)	AFH6567		1	1						
15	Bucket seat back casing (Red)	AFH5736		2	2						
16	Bucket seat back casing (Green)	AFH5737		2	2						
17	Bucket seat back casing (Grey)	AFH5738		2	2						
18	Bucket seat back casing (Black/White)	AFH5739		2	2						
19	Bucket seat back casing (Black/Red)	AFH5740		2	2						
20	Bucket seat back casing (Black/Green)	AFH5741		2	2						
21	Bucket seat back casing (Black/Blue)	AFH6570		2	2						
22	Bucket seat cushion—R/H (Red)	AFH5694		1	1						
23	Bucket seat cushion—L/H (Red)	AFH5695		1	1						
24	Bucket seat cushion—R/H (Green)	AFH5696		1	1						
25	Bucket seat cushion—L/H (Green)	AFH5697		1	1						
26	Bucket seat cushion—R/H (Grey)	AFH5698		1	1						
27	Bucket seat cushion—L/H (Grey)	AFH5699		1	1						
28	Bucket seat cushion—R/H (Black/White)	AFH5700		1	1						
29	Bucket seat cushion—L/H (Black/White)	AFH5701		1	1						
30	Bucket seat cushion—R/H (Black/Red)	AFH5702		1	1						
31	Bucket seat cushion—L/H (Black/Red)	AFH5703		1	1						
32	Bucket seat cushion—R/H (Black/Green)	AFH5704		1	1						
33	Bucket seat cushion—L/H (Black/Green)	AFH5705		1	1						
34	Bucket seat cushion—R/H (Black/Blue)	AFH6564		1	1						
35	Bucket seat cushion—L/H (Black/Blue)	AFH6565		1	1						
36	Bucket seat cushion cover—R/H (Red)	AFH5722		1	1						
37	Bucket seat cushion cover—L/H (Red)	AFH5723		1	1						
38	Bucket seat cushion cover—R/H (Green)	AFH5724		1	1						
39	Bucket seat cushion cover—L/H (Green)	AFH5725		1	1						
40	Bucket seat cushion cover—R/H (Grey)	AFH5726		1	1						
41	Bucket seat cushion cover—L/H (Grey)	AFH5727		1	1						
42	Bucket seat cushion cover—R/H (Black/White)	AFH5728		1	1						
43	Bucket seat cushion cover—L/H (Black/White)	AFH5729		1	1						
44	Bucket seat cushion cover—R/H (Black/Red)	AFH5730		1	1						
45	Bucket seat cushion cover—L/H (Black/Red)	AFH5731		1	1						
46	Bucket seat cushion cover—R/H (Black/Green)	AFH5732		1	1						
47	Bucket seat cushion cover—L/H (Black/Green)	AFH5733		1	1						
48	Bucket seat cushion cover—R/H (Black/Blue)	AFH6568		1	1						
49	Bucket seat cushion cover—L/H (Black/Blue)	AFH6569		1	1						

Item No.	DESCRIPTION	Commencing (C) 10101 Part Number	Illus. No.	Qty. per Vehicle RHD	Qty. per Vehicle LHD	Unit of Issue	Type of Vehicle	MODIFICATIONS New Part Number	MODIFICATIONS Change Point	MODIFICATIONS Amdt. No.	REMARKS
	TRIMMING										
1	**Dash trim roll assembly—all colours**	**AFH2555**	**RL1**	**1**	**1**				**Fin. (B) 5499**		
2	Dash trim roll assembly—Red			1	1			AFH3740			
3	Dash trim roll assembly—Green			1	1			AFH6468			
4	Dash trim roll assembly—Grey			1	1			AFH6469			
5	Dash trim roll assembly—Black/Red			1	1			AFH6470	Com. (B) 5500		
6	Dash trim roll assembly—Black/Green			1	1			AFH6471			
7	Dash trim roll assembly—Black/Grey			1	1			AFH6472			
8	Dash trim roll assembly—Black/White			1	1			AFH6473			
9	**Door trim roll assembly—R/H—all colours**	**AFH2556**	**RL2**	**1**	**1**				**Fin. (B) 5499**		
10	Door trim roll assembly—R/H—Red			1	1			AFH3742			
11	Door trim roll assembly—R/H—Green			1	1			AFH6492			
12	Door trim roll assembly—R/H—Grey			1	1			AFH6494			
13	Door trim roll assembly—R/H—Black/Red			1	1			AFH6496	Com. (B) 5500		
14	Door trim roll assembly—R/H—Black/Green			1	1			AFH6498			
15	Door trim roll assembly—R/H—Black/Grey			1	1			AFH6500			
16	Door trim roll assembly—R/H—Black/White			1	1			AFH6502			
17	**Door trim roll assembly—L/H—all colours**	**AFH2557**	**RL3**	**1**	**1**				**Fin. (B) 5499**		
18	Door trim roll assembly—L/H—Red			1	1			AFH3743			
19	Door trim roll assembly—L/H—Green			1	1			AFH6493			
20	Door trim roll assembly—L/H—Grey			1	1			AFH6495			
21	Door trim roll assembly—L/H—Black/Red			1	1		Tourer	AFH6497	Com. (B) 5500		
22	Door trim roll assembly—L/H—Black/Green			1	1			AFH6499			
23	Door trim roll assembly—L/H—Black/Grey			1	1			AFH6501			
24	Door trim roll assembly—L/H—Black/White			1	1			AFH6503			
25	**Rear trim roll assembly—centre—all colours**	**AFH2566**	**RL4**	**1**	**1**				**Fin. (B) 5499**		
26	Rear trim roll assembly—centre—Red			1	1			AFH3741			
27	Rear trim roll assembly—centre—Green			1	1			AFH6474			
28	Rear trim roll assembly—centre—Grey			1	1			AFH6475			
29	Rear trim roll assembly—centre—Black/Red			1	1			AFH6476	Com. (B) 5500		
30	Rear trim roll assembly—centre—Black/Green			1	1			AFH6477			
31	Rear trim roll assembly—centre—Black/Grey			1	1			AFH6478			
32	Rear trim roll assembly—centre—Black/White			1	1			AFH6479			
33	**Rear trim roll assembly—R/H end—all colours**	**AFH2558**	**RL5**	**1**	**1**				**Fin. (B) 5499**		
34	Rear trim roll assembly—R/H end—Red			1	1			AFH3744			
35	Rear trim roll assembly—R/H end—Green			1	1			AFH6480			
36	Rear trim roll assembly—R/H end—Grey			1	1			AFH6482			
37	Rear trim roll assembly—R/H end—Black/Red			1	1			AFH6484	Com. (B) 5500		
38	Rear trim roll assembly—R/H end—Black/Green			1	1			AFH6486			
39	Rear trim roll assembly—R/H end—Black/Grey			1	1			AFH6488			
40	Rear trim roll assembly—R/H end—Black/White			1	1			AFH6490			

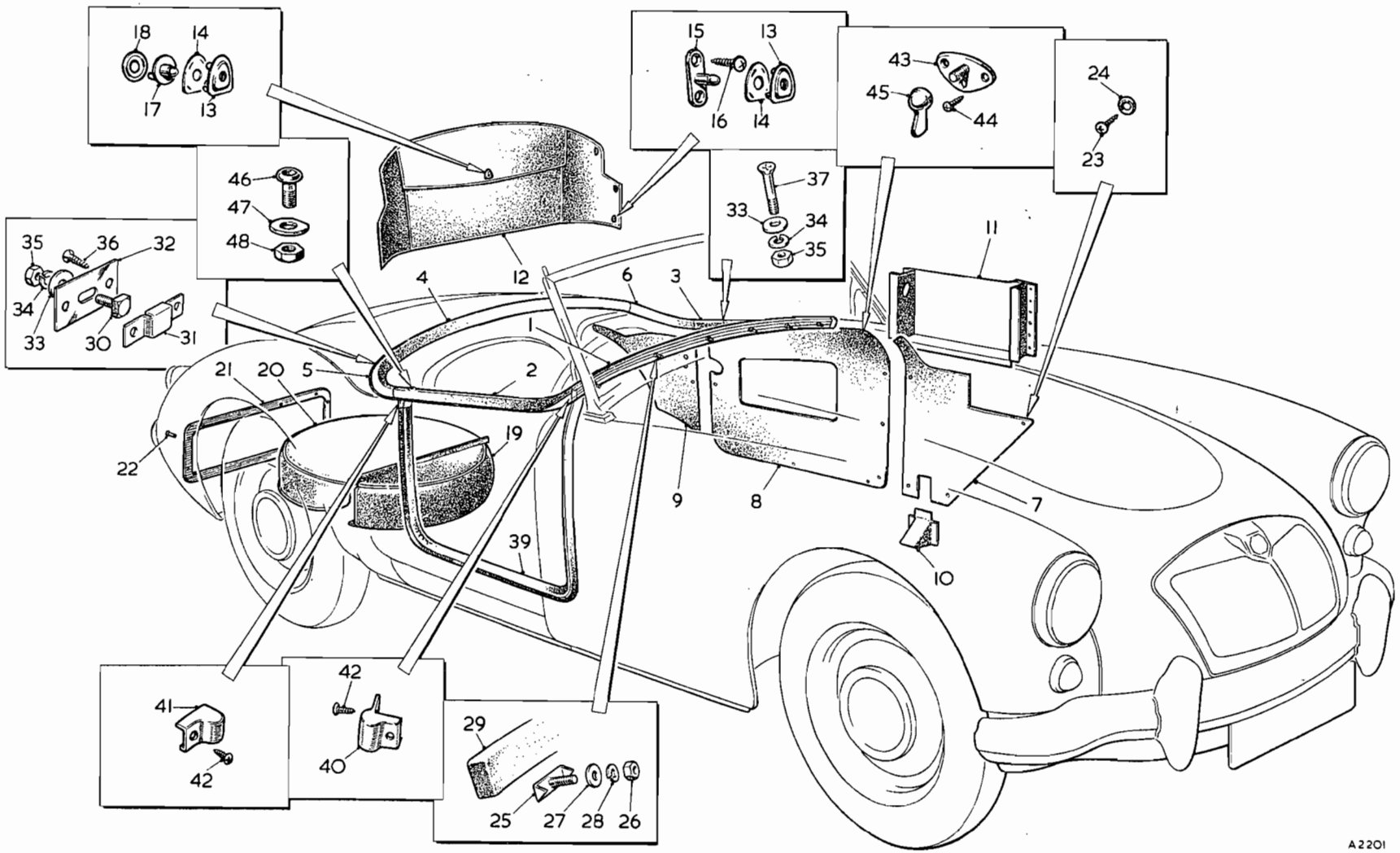

To face page R.29

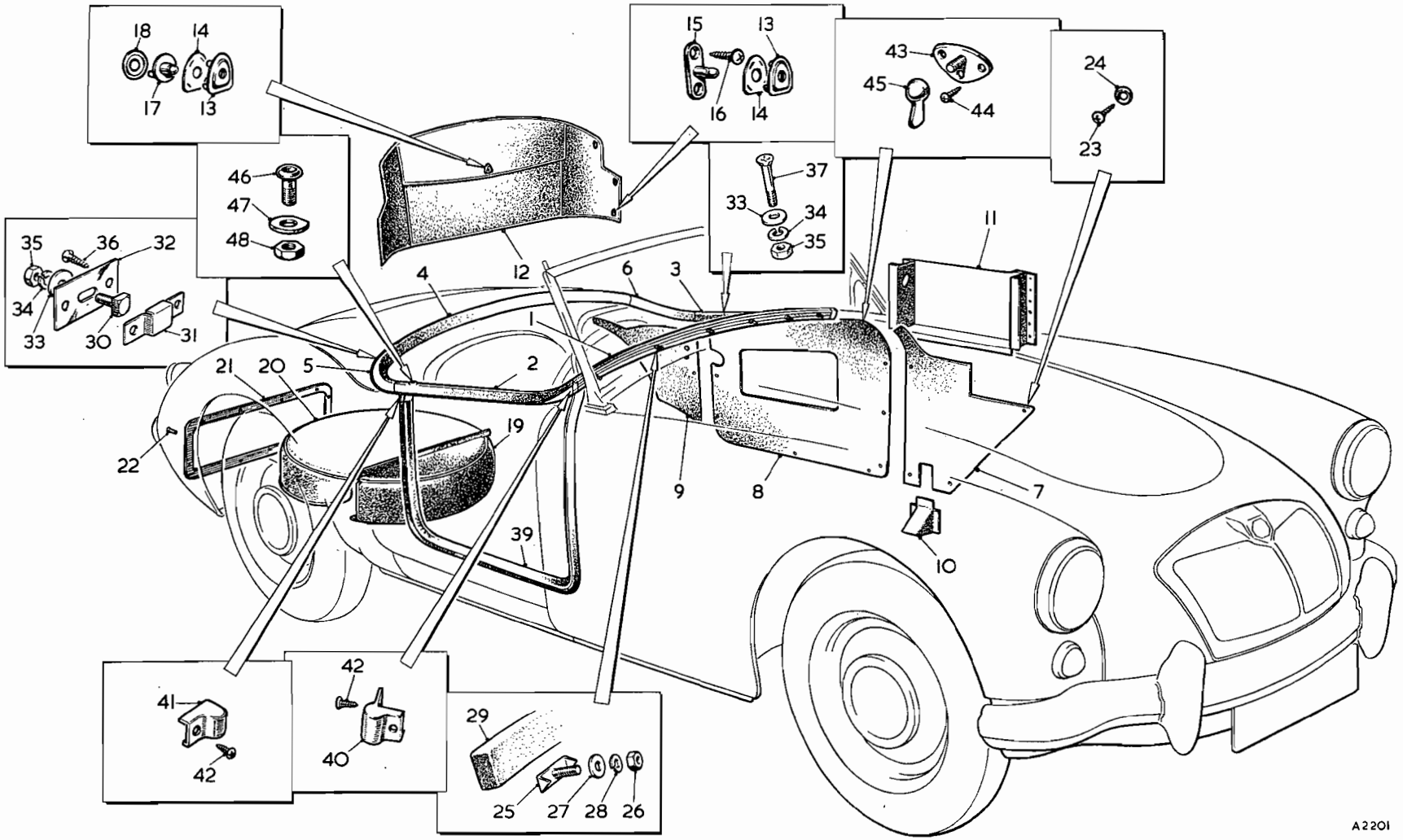

To face page R.30

Item No.	DESCRIPTION	Commencing (C) 10101 Part Number	Illus. No.	Qty. per Vehicle RHD	LHD	Unit of Issue	Type of Vehicle	MODIFICATIONS New Part Number	Change Point	Amdt. No.	REMARKS
	Trimming—*continued*										
1	**Rear trim roll assembly—L/H end—all colours**	**AFH2559**	**RL6**	**1**	**1**				**Fin. (B) 5499**		
2	Rear trim roll assembly—L/H end—Red			1	1			AFH3745			
3	Rear trim roll assembly—L/H end—Green			1	1			AFH6481			
4	Rear trim roll assembly—L/H end—Grey			1	1			AFH6483			
5	Rear trim roll assembly—L/H end—Black/Red			1	1			AFH6485	Com. (B) 5500		
6	Rear trim roll assembly—L/H end—Black/Green			1	1			AFH6487			
7	Rear trim roll assembly—L/H end—Black/Grey			1	1			AFH6489			
8	Rear trim roll assembly—L/H end—Black/White			1	1			AFH6491			
9	**Liner assembly—dash side—R/H—Red**	**AFH2560**		**1**	**1**						
10	Liner assembly—dash side—R/H—Green	AFH6504		1	1						
11	Liner assembly—dash side—R/H—Grey	AFH6506		1	1						
12	Liner assembly—dash side—R/H—Black	AFH6508		1	1						
13	**Liner assembly—dash side—L/H—Red**	**AFH2561**	**RL7**	**1**	**1**						
14	Liner assembly—dash side—L/H—Green	AFH6505		1	1						
15	Liner assembly—dash side—L/H—Grey	AFH6507		1	1						
16	Liner assembly—dash side—L/H—Black	AFH6509		1	1						
17	**Liner assembly—door—R/H—Red**	**AFH2562**		**1**	**1**						
18	Liner assembly—door—R/H—Green	AFH6510		1	1						
19	Liner assembly—door—R/H—Grey	AFH6512		1	1						
20	Liner assembly—door—R/H—Black	AFH6514		1	1						
21	**Liner assembly—door—L/H—Red**	**AFH2563**	**RL8**	**1**	**1**						
22	Liner assembly—door—L/H—Green	AFH6511		1	1		Tourer				
23	Liner assembly—door—L/H—Grey	AFH6513		1	1						
24	Liner assembly—door—L/H—Black	AFH6515		1	1						
25	**Liner assembly—rear quarter—R/H—Red**	**AFH2564**		**1**	**1**						
26	Liner assembly—rear quarter—R/H—Green	AFH6516		1	1						
27	Liner assembly—rear quarter—R/H—Grey	AFH6518		1	1						
28	Liner assembly—rear quarter—R/H—Black	AFH6520		1	1						
29	**Liner assembly—rear quarter—L/H—Red**	**AFH2565**	**RL9**	**1**	**1**						
30	Liner assembly—rear quarter—L/H—Green	AFH6517		1	1						
31	Liner assembly—rear quarter—L/H—Grey	AFH6519		1	1						
32	Liner assembly—rear quarter—L/H—Black	AFH6521		1	1						
33	**Dash side mounting cover assembly—Red**	**AFH2567**	**RL10**	**2**	**2**						
34	Dash side mounting cover assembly—Green	AFH5606		2	2						
35	Dash side mounting cover assembly—Grey	AFH5607		2	2						
36	Dash side mounting cover assembly—Black	AFH5608		2	2						
37	**Door pocket assembly—R/H—Red**	**AFH2568**		**1**	**1**						
38	Door pocket assembly—R/H—Green	AFH6522		1	1						
39	Door pocket assembly—R/H—Grey	AFH6524		1	1						
40	Door pocket assembly—R/H—Black	AFH6526		1	1						
41	**Door pocket assembly—L/H—Red**	**AFH2569**	**RL11**	**1**	**1**						
42	Door pocket assembly—L/H—Green	AFH6523		1	1						
43	Door pocket assembly—L/H—Grey	AFH6525		1	1						
44	Door pocket assembly—L/H—Black	AFH6527		1	1						

Item No.	DESCRIPTION	Commencing (C) 10101 Part Number	Illus. No.	Qty. per Vehicle RHD	Qty. per Vehicle LHD	Unit of Issue	Type of Vehicle	MODIFICATIONS New Part Number	MODIFICATIONS Change Point	MODIFICATIONS Amdt. No.	REMARKS
	Trimming—*continued*										
1	**Stowage assembly—side-curtain—Red**	**AFH2570**	**RL12**	**1**	**1**						
2	Stowage assembly—side-curtain—Green	AFH5896		1	1						
3	Stowage assembly—side-curtain—Grey	AFH5897		1	1						
4	Stowage assembly—side-curtain—Black	AFH5898		1	1						
5	**Centre arm-rest cover assembly—Red**	**AFH2609**		**1**	**1**						
6	Centre arm-rest cover assembly—Green	AFH6462		1	1						
7	Centre arm-rest cover assembly—Grey	AFH6463		1	1						
8	Centre arm-rest cover assembly—Black/Red	AFH6464		1	1						
9	Centre arm-rest cover assembly—Black/Green	AFH6465		1	1						
10	Centre arm-rest cover assembly—Black/Grey	AFH6466		1	1						
11	Centre arm-rest cover assembly—Black/White	AFH6467		1	1						
12	**Piping for trim roll—Red**	**AFH4835**		**A/R**	**A/R**						
13	Piping for trim roll—Green	AFH4836		A/R	A/R						
14	Piping for trim roll—Grey	AFH4837		A/R	A/R						
15	Piping for trim roll—White	AFH4838		A/R	A/R						
16	Lift-the-dot fastener	7H9961	RL13	7	7						
17	Lift-the-dot clinch plate	7H9963	RL14	7	7						
18	Screw—base peg	97H499	RL15	6	6						
19	Screw—peg	RTP605	RL16	12	12						
20	Pronged clinch	7H9964	RL17	1	1						
21	Plate for pronged clinch	7H9960	RL18	1	1						
22	**Spare wheel cover—front**	**AFH2571**	**RL19**	**1**	**1**		Tourer				
23	**Spare wheel cover—rear**	**AFH2572**	**RL20**	**1**	**1**						
24	Spare wheel cover frame	AFH1731	RL21	1	1						
25	Rivets for cover frame	AFH5452	RL22	12	12						
26	Screw fixing door liner	RTP407		4	4						
27	Screw fixing liner and pockets	RTP404	RL23	4	4						
28	Cup washer for liner and pockets screw	7701	RL24	8	8						
29	Bolt fixing trim roll end—dash	AFH1900	RL25	6	6						
30	Nut for dash trim roll bolt	FNZ103	RL26	6	6						
31	Washer (plain)	PWZ203	RL27	6	6						
32	Washer (spring)	LWZ203	RL28	6	6						
33	Trim roll rubber for bonnet surround	AFH1846	RL29	1	1						
34	Bolt (special) for trim roll	AFH2819	RL30	9	9						Supply in sets prior to (B) 5500
35	Retainer for special bolt	AFH2820	RL31	9	9						Supply in sets prior to (B) 5500
36	Base plate for retainer	AFH2821	RL32	9	9						Supply in sets prior to (B) 5500
37	Washer (plain) for trim roll to body	PWZ203	RL33	15	15						
38	Washer (spring) for trim roll to body	LWZ203	RL34	15	15						
39	Nut for trim roll to body	FNZ103	RL35	15	15						
40	Screw fixing retainer to trim roll	CTZ604	RL36	18	18						
41	Screw fixing trim roll	CMZ0320	RL37	6	6						
42	Screw fixing tacking strip to castings	CTZ403		14	14						

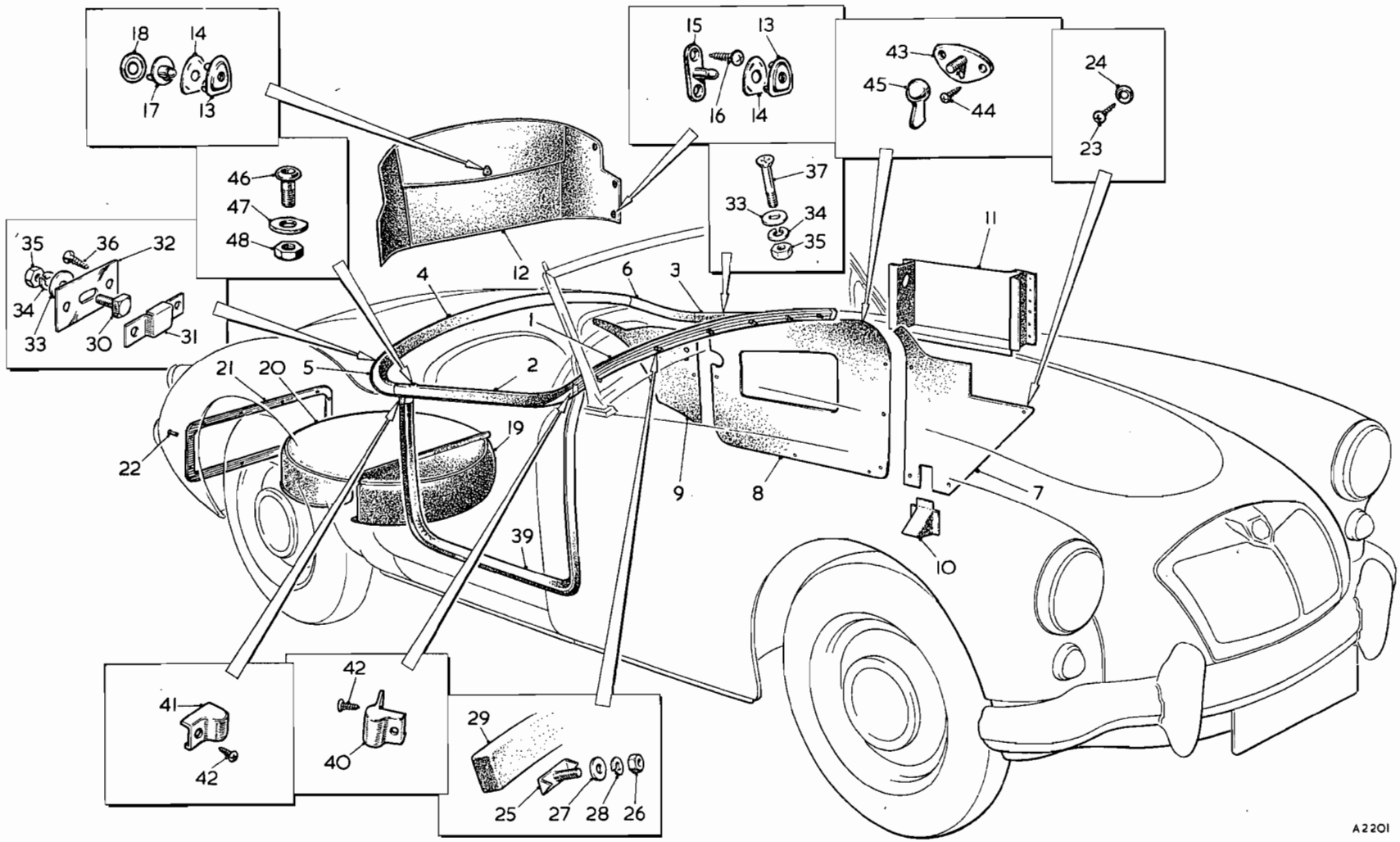
18
14
17
13
15
13
16
14
43
45
44
24
23
46
47
48
37
33
34
35
35
36
32
34
33
30
31
11
4
12
6
3
1
21
20
5
2
19
22
9
8
7
10
39
41
42
42
40
29
25
27
28
26
A2201

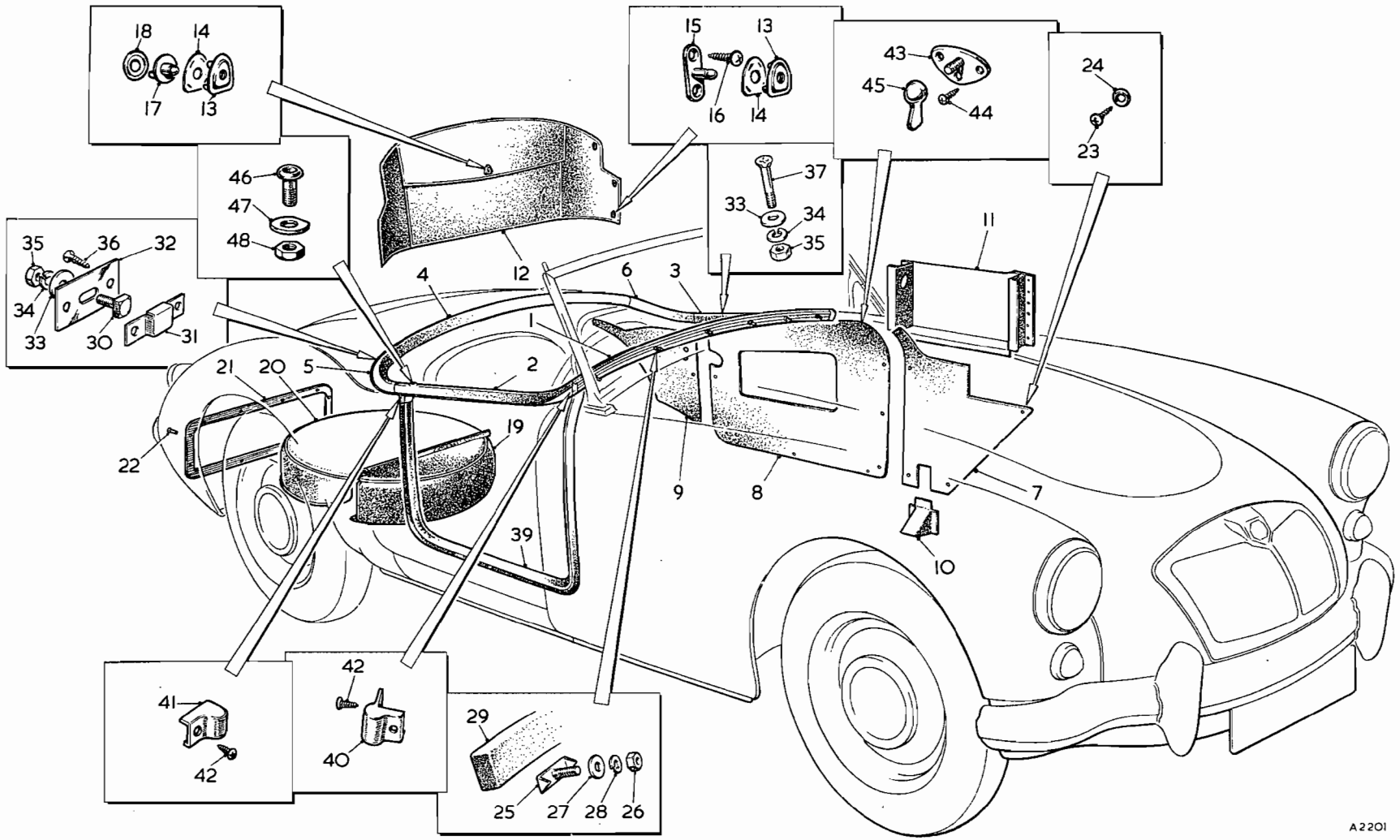

To face page R.32

Item No.	DESCRIPTION	Commencing (C) 10101 Part Number	Illus. No.	Qty. per Vehicle RHD	Qty. per Vehicle LHD	Unit of Issue	Type of Vehicle	MODIFICATIONS New Part Number	MODIFICATIONS Change Point	MODIFICATIONS Amdt. No.	REMARKS
	Trimming—*continued*										
1	**Door sealing rubber and clip assembly—63″—Red**	**AFH2451**	**RL39**	**2**	**2**						
2	Door sealing rubber and clip assembly—63″—Green	AFH2452		2	2						
3	Door sealing rubber and clip assembly—63″—Grey	AFH2453		2	2						
4	Door sealing rubber and clip assembly—63″—Black	AFH2455		2	2						
5	Finisher—hinge pillar—R/H door seal	AFH2574	RL40	1	1						
6	Finisher—hinge pillar	AFH2575		1	1						
7	Finisher—shut pillar—R/H door seal	AFH2576	RL41	1	1						
8	Finisher—shut pillar—L/H door seal	AFH2577		1	1						
9	Screw fixing finisher	RTP605	RL42	8	8						
10	Stud fixing side-curtain	MB21959	RL43	2	2		Tourer				
11	Screw fixing side-curtain stud	RTP805	RL44	6	6						
12	Locking handle for side-curtain	MB19331	RL45	2	2						
13	Socket for curtain peg	AFH1744	RL46	2	2						
14	Washer (special) for curtain peg socket	AFH2579	RL47	2	2						
15	Nut for curtain peg socket	FNZ208	RL48	2	2						
16	Leathercloth (Red)—50″ wide	AFH1831		A/R	A/R						
17	Leathercloth (Green)—50″ wide	AFH1832		A/R	A/R						
18	Leathercloth (Grey)—50″ wide	AFH1833		A/R	A/R						
19	Leathercloth (Black)—50″ wide	AFH1834		A/R	A/R						

Item No.	DESCRIPTION	Commencing (C) 10101 Part Number	Illus. No.	Qty. per Vehicle RHD	Qty. per Vehicle LHD	Unit of Issue	Type of Vehicle	MODIFICATIONS New Part Number	MODIFICATIONS Change Point	MODIFICATIONS Amdt. No.	REMARKS
	Trimming—*continued*										
1	**Carpet—front—R/H assembly**	**AFH1850**	**RM1**	1				**AFH6528**	**Com. (C) 61504**		
2	**Carpet—front—L/H assembly**	**AFH1851**	**RM2**	1							
3	Carpet—front—R/H assembly	AFH2468			1			AFH6530	Com. (C) 61504		
4	Carpet—front—L/H assembly	AFH2469			1						
5	**Carpet—rear—R/H assembly**	**AFH1854**	**RM3**	1	1						
6	**Carpet—rear—L/H assembly**	**AFH1855**	**RM4**	1	1						
7	Carpet—heelboard	AFH1856	RM5	1	1						
8	Carpet—tunnel—front assembly	AFH1857	RM6	1	1			AFH6529	Com. (C) 61504		
9	Carpet—tunnel—intermediate assembly	AFH2474	RM7	1	1						
10	Carpet—tunnel—rear (Black)—and arm-rest assembly—Red	AFH1860	RM8	1	1						
11	Carpet—tunnel—rear (Black)—and arm-rest assembly—Green	AFH6544		1	1						
12	Carpet—tunnel—rear (Black)—and arm-rest assembly—Grey	AFH6545		1	1						
13	Carpet—tunnel—rear (Black)—and arm-rest assembly—Black/Red	AFH6546		1	1						
14	Carpet—tunnel—rear (Black)—and arm-rest assembly—Black/Green	AFH6547		1	1						
15	Carpet—tunnel—rear (Black)—and arm-rest assembly—Black/Grey	AFH6548		1	1						
16	Carpet—tunnel—rear (Black)—and arm-rest assembly—Black/White	AFH6549		1	1						
17	Carpet—R/H sill	AFH1862	RM9	1	1						
18	Carpet—L/H sill	AFH1863	RM10	1	1						
19	**Carpet—R/H toeboard end**	**AFH1864**	**RM11**	1			Tourer				
20	**Carpet—L/H toeboard end**	**AFH1865**	**RM12**	1							
21	Carpet—R/H toeboard end	AFH2472			1						
22	Carpet—L/H toeboard end	AFH2473			1						
23	Carpet—R/H dash side recess	AFH1866	RM13	1	1						
24	Carpet—L/H dash side recess	AFH1867	RM14	1	1						
25	Carpet—R/H front bulkhead rear strut	AFH1868	RM15	1	1						
26	Carpet—L/H front bulkhead rear strut	AFH1869	RM16	1	1						
27	Carpet—chassis cross-member	AFH2476	RM17	2	2						
28	Felt—gearbox cover	AFH2477	RM18	1	1						
29	Felt—front tunnel	AFH1847	RM19	1	1						
30	Felt—rear tunnel	AFH2478	RM20	1	1						
31	Felt—tunnel top	AFH2479	RM21	1	1						
32	Felt—R/H front	AFH1848	RM22	1							
33	Felt—L/H front	AFH1849	RM23	1							
34	Felt—R/H front	AFH2480			1						
35	Felt—L/H front	AFH2481			1						
36	Lift-the-dot fastener—carpets	7H9962	RM24	16	16						
37	Clinch plate—carpets	7H9963	RM25	16	16						
38	Durable dot button—carpet—tunnel	7H9864	RM26	1	1						
39	Durable dot socket—carpet—tunnel	7H9866	RM27	1	1						
40	Durable dot stud—carpet—tunnel	7H9867	RM28	1	1						
41	Durable dot eyelet—carpet—tunnel	7H9868	RM29	1	1						
42	**Carpet—bulk—40″ wide**	**ADE539**		**A/R**	**A/R**						

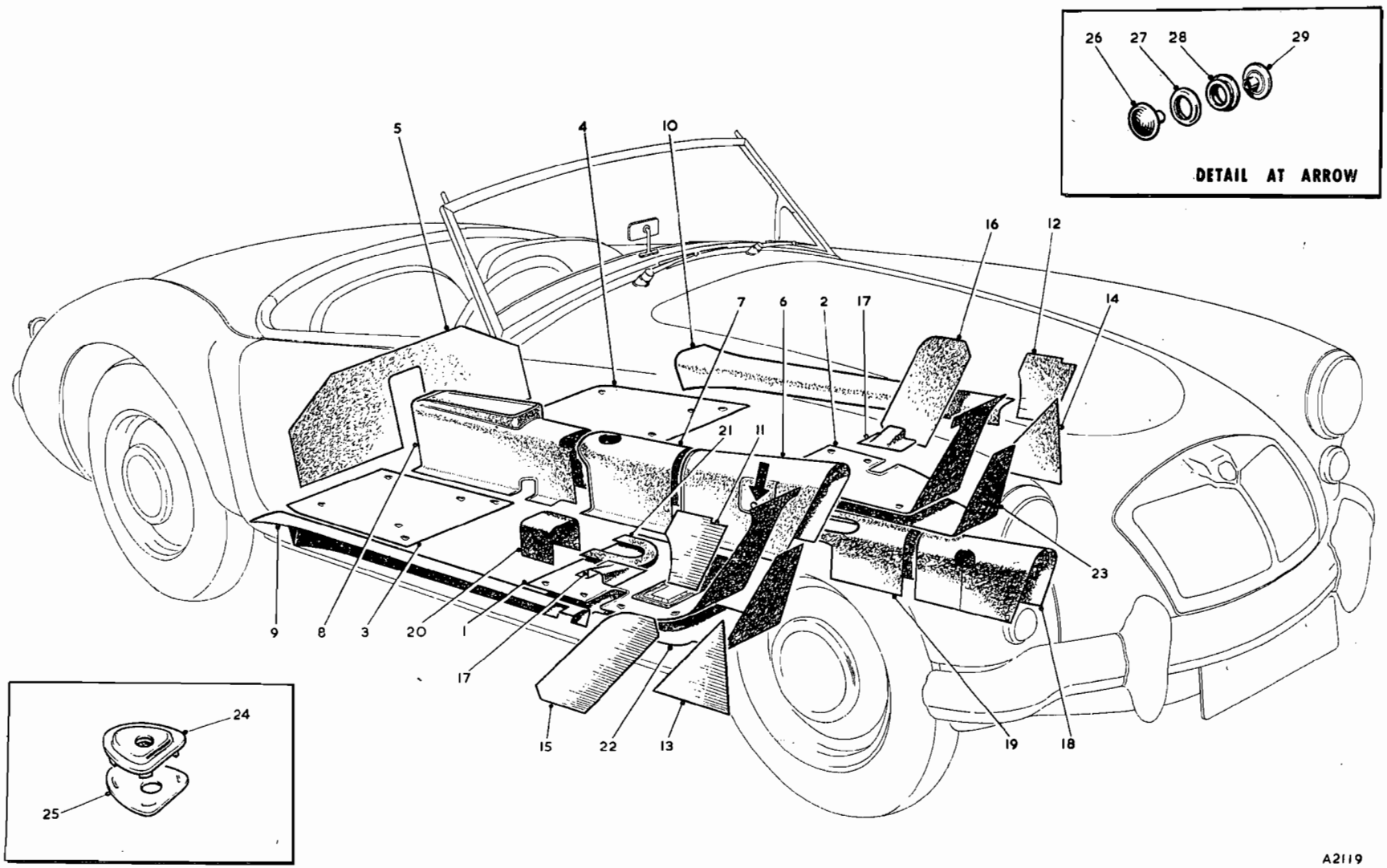

To face page R.33

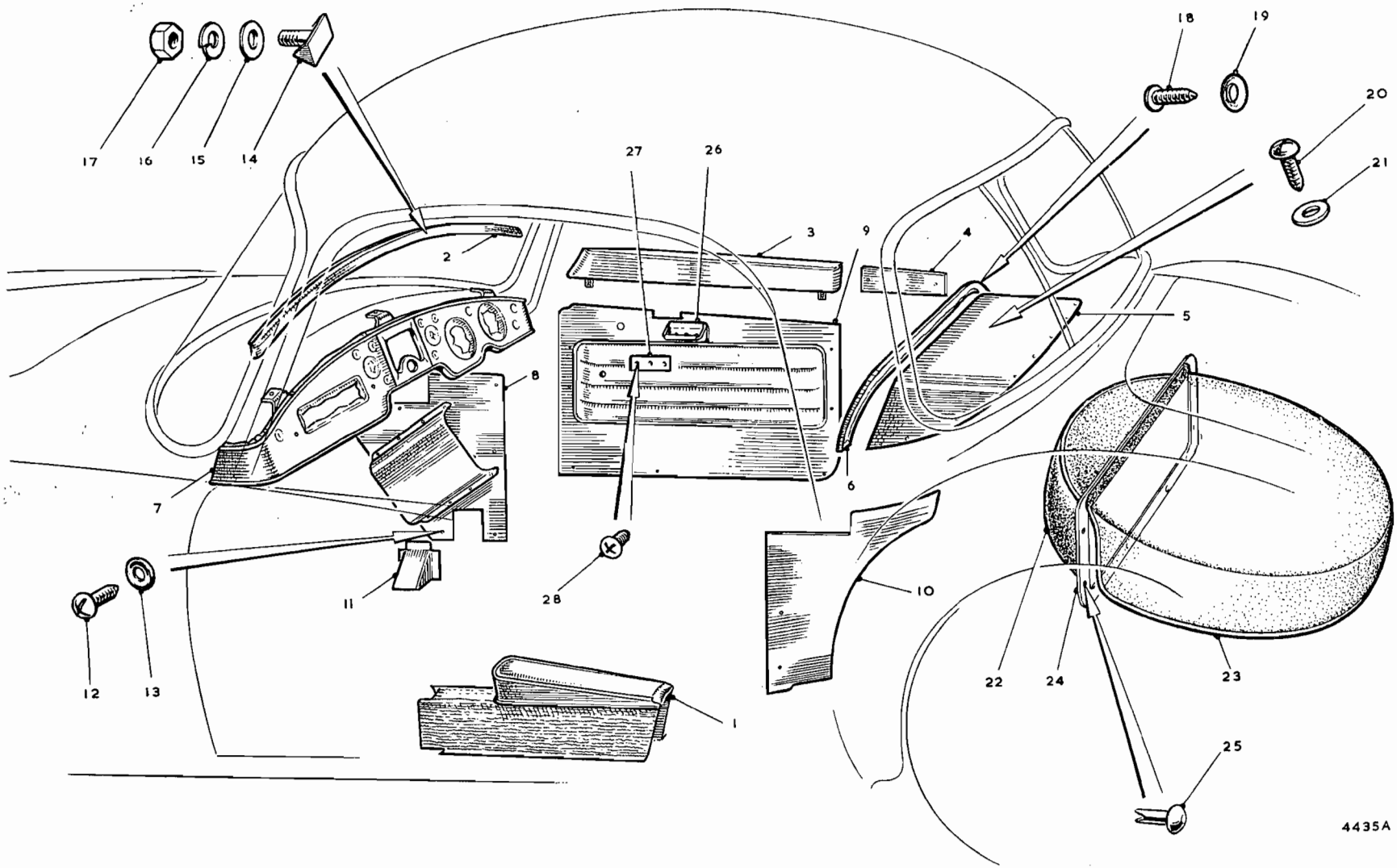

To face page R.34

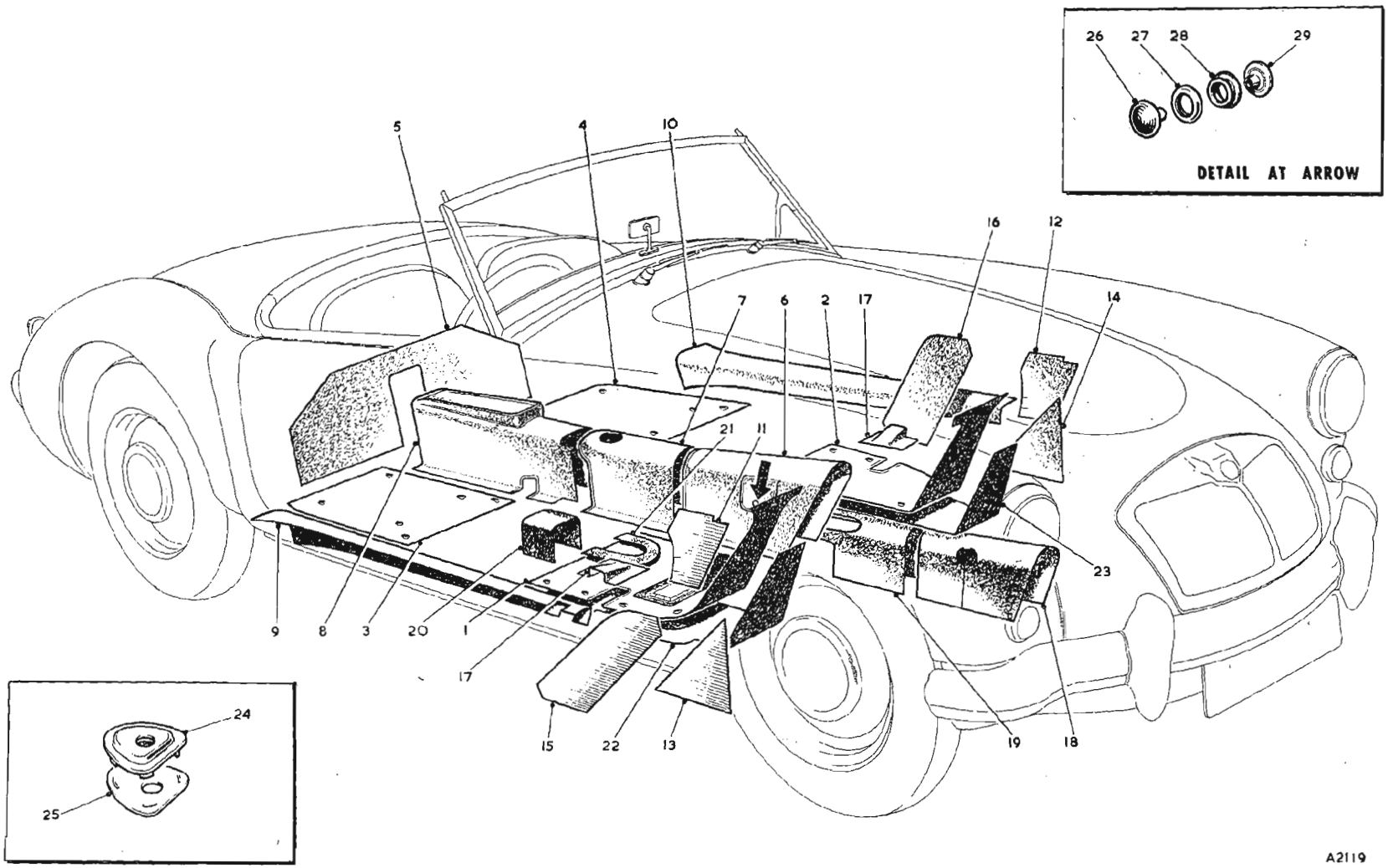

To face page R.33

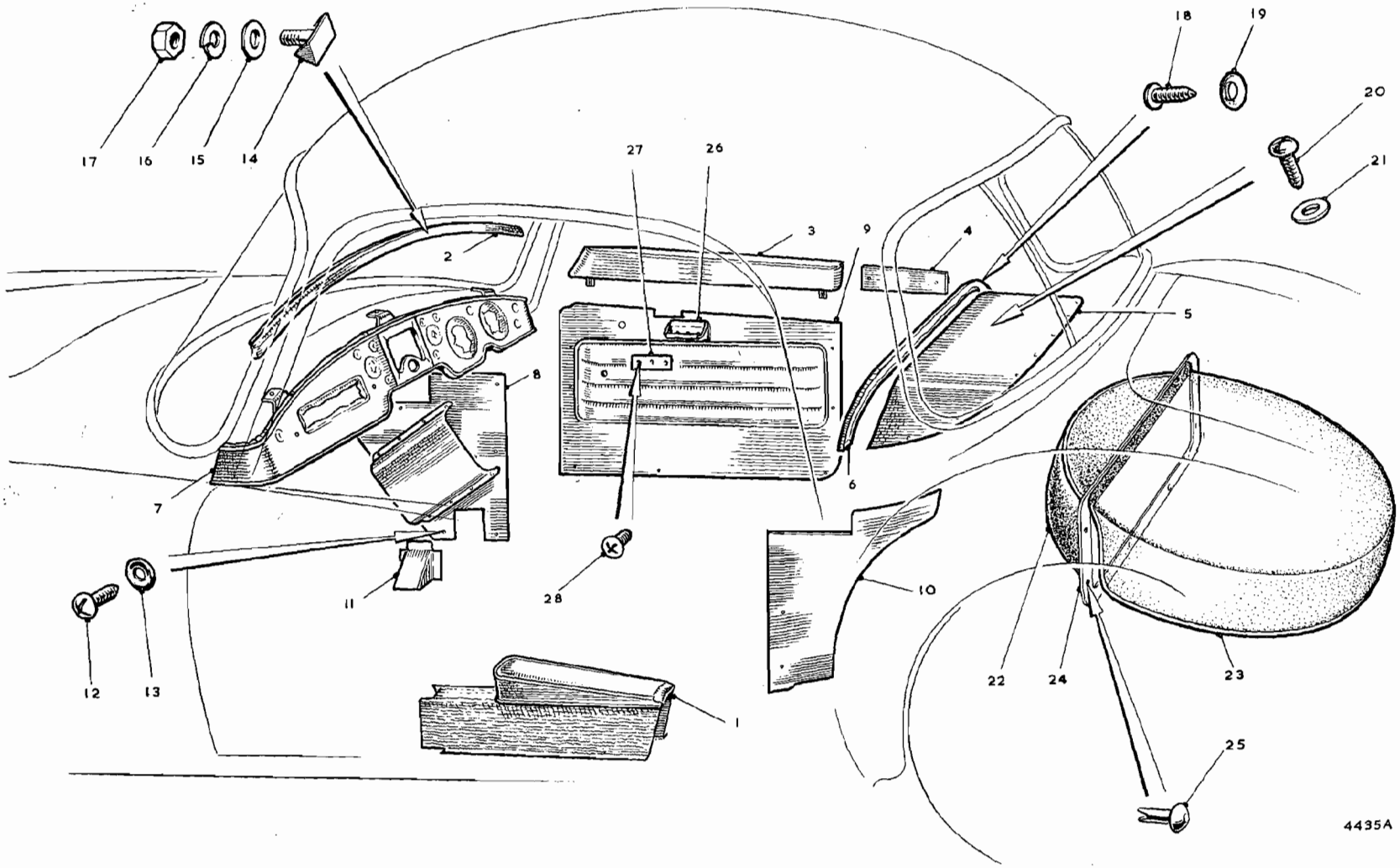

To face page R.34

Item No.	DESCRIPTION	Commencing (C) 20671 Part Number	Illus. No.	Qty. per Vehicle RHD	Qty. per Vehicle LHD	Unit of Issue	Type of Vehicle	MODIFICATIONS New Part Number	MODIFICATIONS Change Point	MODIFICATIONS Amdt. No.	REMARKS
	Trimming—*continued*										
1	**Centre arm-rest cover assembly—Red**	**AFH4631**	**RN1**	1	1						
2	Centre arm-rest cover assembly—Green	AFH5550		1	1						
3	Centre arm-rest cover assembly—Grey	AFH5551		1	1						
4	Centre arm-rest cover assembly—Black/White	AFH5552		1	1						
5	Centre arm-rest cover assembly—Black/Red	AFH5553		1	1						
6	Centre arm-rest cover assembly—Black/Green	AFH5554		1	1						
7	Centre arm-rest cover assembly—Black/Blue	AFH5555		1	1						
8	**Dash trim roll assembly—Red**	**AFH4652**	**RN2**	1	1						
9	Dash trim roll assembly—Green	AFH5556		1	1						
10	Dash trim roll assembly—Grey	AFH5557		1	1						
11	Dash trim roll assembly—Blue	AFH5558		1	1						
12	Dash trim roll assembly—White	AFH5559		1	1						
13	Dash trim roll assembly—Black	AFH5560		1	1						
14	**Door capping assembly—R/H**] **Red**	**AFH4648**	**RN3**	1	1						
15	**Door capping assembly—L/H**]	**AFH4649**		1	1						
16	Door capping assembly—R/H] Green	AFH5586		1	1						
17	Door capping assembly—L/H]	AFH5587		1	1						
18	Door capping assembly—R/H] Grey	AFH5588		1	1						
19	Door capping assembly—L/H]	AFH5589		1	1						
20	Door capping assembly—R/H] Blue	AFH5590		1	1						
21	Door capping assembly—L/H]	AFH5591		1	1						
22	Door capping assembly—R/H] White	AFH5592		1	1		Coupé				
23	Door capping assembly—L/H]	AFH5593		1	1						
24	Door capping assembly—R/H] Black	AFH5594		1	1						
25	Door capping assembly—L/H]	AFH5595		1	1						
26	**Rear quarter capping assembly—R/H**] **Red**	**AFH4650**	**RN4**	1	1						
27	**Rear quarter capping assembly—L/H**]	**AFH4651**		1	1						
28	Rear quarter capping assembly—R/H] Green	AFH5596		1	1						
29	Rear quarter capping assembly—L/H]	AFH5597		1	1						
30	Rear quarter capping assembly—R/H] Grey	AFH5598		1	1						
31	Rear quarter capping assembly—L/H]	AFH5599		1	1						
32	Rear quarter capping assembly—R/H] Blue	AFH5600		1	1						
33	Rear quarter capping assembly—L/H]	AFH5601		1	1						
34	Rear quarter capping assembly—R/H] White	AFH5602		1	1						
35	Rear quarter capping assembly—L/H]	AFH5603		1	1						
36	Rear quarter capping assembly—R/H] Black	AFH5604		1	1						
37	Rear quarter capping assembly—L/H]	AFH5605		1	1						
38	**Rear shelf assembly—Red**	**AFH4660**	**RN5**	1	1						
39	Rear shelf assembly—Green	AFH5609		1	1						
40	Rear shelf assembly—Grey	AFH5610		1	1						
41	Rear shelf assembly—Blue	AFH5611		1	1						
42	Rear shelf assembly—White	AFH5612		1	1						
43	Rear shelf assembly—Black	AFH5613		1	1						

Item No.	DESCRIPTION	Commencing (C) 20671 Part Number	Illus. No.	Qty. per Vehicle RHD	Qty. per Vehicle LHD	Unit of Issue	Type of Vehicle	MODIFICATIONS New Part Number	MODIFICATIONS Change Point	MODIFICATIONS Amdt. No.	REMARKS
	Trimming—*continued*										
1	**Fillet assembly—rear shelf—Red**	**AFH4656**	**RN6**	1	1						
2	Fillet assembly—rear shelf—Green	AFH5614		1	1						
3	Fillet assembly—rear shelf—Grey	AFH5615		1	1						
4	Fillet assembly—rear shelf—Blue	AFH5616		1	1						
5	Fillet assembly—rear shelf—White	AFH5617		1	1						
6	Fillet assembly—rear shelf—Black	AFH5618		1	1						
7	**Fascia panel assembly**] **Red**	**AFH4658**	**RN7**	1							
8	**Fascia panel assembly**]	**AFH4659**			1						
9	Fascia panel assembly] Green	AFH5620		1							
10	Fascia panel assembly]	AFH5621			1						
11	Fascia panel assembly] Grey	AFH5622		1							
12	Fascia panel assembly]	AFH5623			1						
13	Fascia panel assembly] Blue	AFH5624		1							
14	Fascia panel assembly]	AFH5625			1						
15	Fascia panel assembly] White	AFH5626		1							
16	Fascia panel assembly]	AFH5627			1						
17	Fascia panel assembly] Black	AFH5628		1							
18	Fascia panel assembly]	AFH5629			1						
19	**Liner assembly—dash—with map pocket—R/H**] **Red**	**AFH4642**	**RN8**	1	1						
20	**Liner assembly—dash—with map pocket—L/H**]	**AFH4643**		1	1		Coupé				
21	Liner assembly—dash—with map pocket—R/H] Green	AFH5562		1	1						
22	Liner assembly—dash—with map pocket—L/H]	AFH5563		1	1						
23	Liner assembly—dash—with map pocket—R/H] Grey	AFH5564		1	1						
24	Liner assembly—dash—with map pocket—L/H]	AFH5565		1	1						
25	Liner assembly—dash—with map pocket—R/H] Black	AFH5566		1	1						
26	Liner assembly—dash—with map pocket—L/H]	AFH5567		1	1						
27	**Liner assembly—door—R/H**] **Red**	**AFH4644**	**RN9**	1	1						
28	**Liner assembly—door—L/H**]	**AFH4645**		1	1						
29	Liner assembly—door—R/H] Green	AFH5568		1	1						
30	Liner assembly—door—L/H]	AFH5569		1	1						
31	Liner assembly—door—R/H] Grey	AFH5570		1	1						
32	Liner assembly—door—L/H]	AFH5571		1	1						
33	Liner assembly—door—R/H] Black/White	AFH5572		1	1						
34	Liner assembly—door—L/H]	AFH5573		1	1						
35	Liner assembly—door—R/H] Black/Red	AFH5574		1	1						
36	Liner assembly—door—L/H]	AFH5575		1	1						
37	Liner assembly—door—R/H] Black/Green	AFH5576		1	1						
38	Liner assembly—door—L/H]	AFH5577		1	1						
39	Liner assembly—door—R/H] Black/Blue	AFH5578		1	1						
40	Liner assembly—door—L/H]	AFH5579		1	1						
41	Fillet assembly—header trim	AFH4653		1	1						
42	Fillet assembly—cant rail—R/H	AFH4654		1	1						
43	Fillet assembly—cant rail—L/H	AFH4655		1	1						

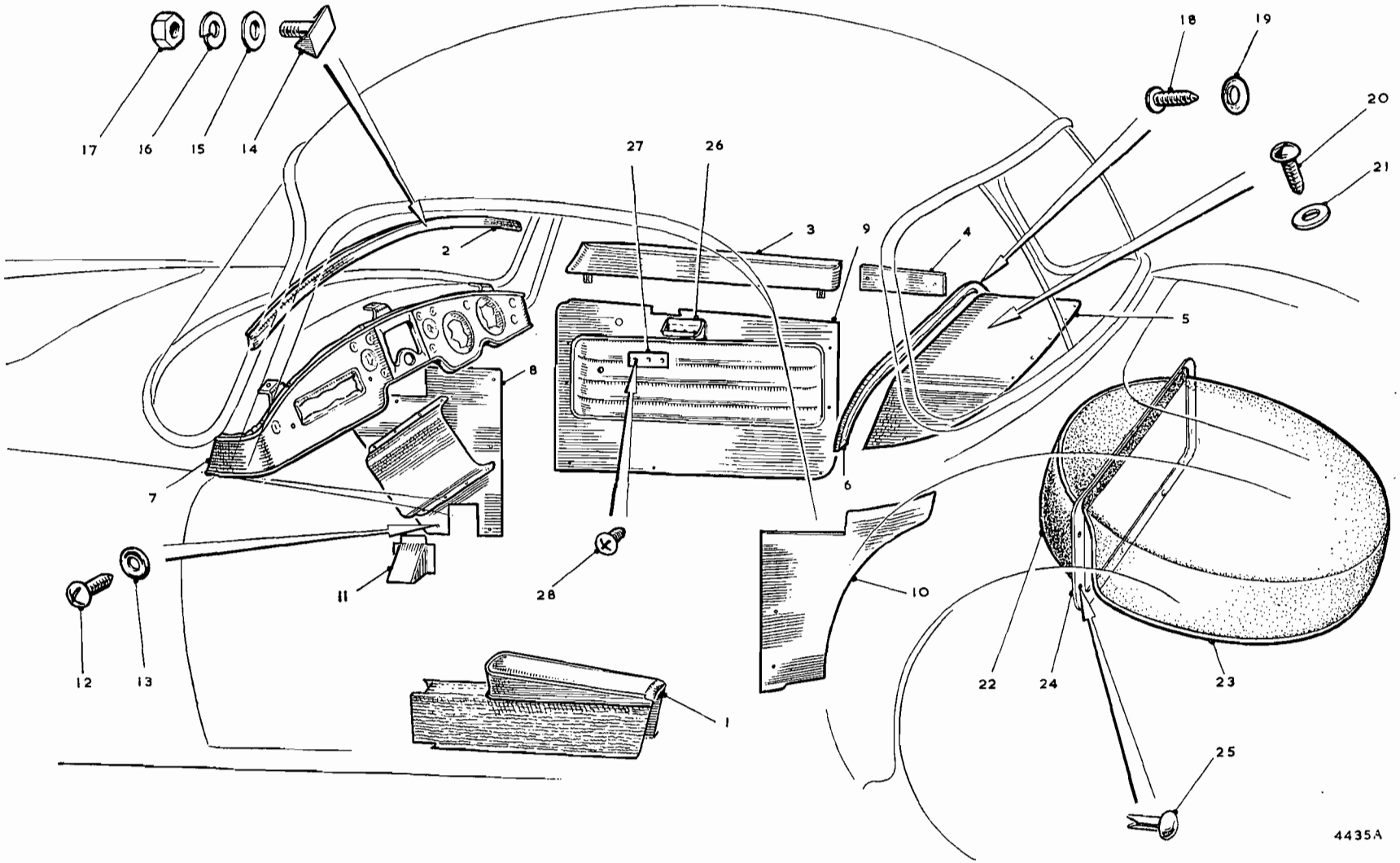

To face page R.35

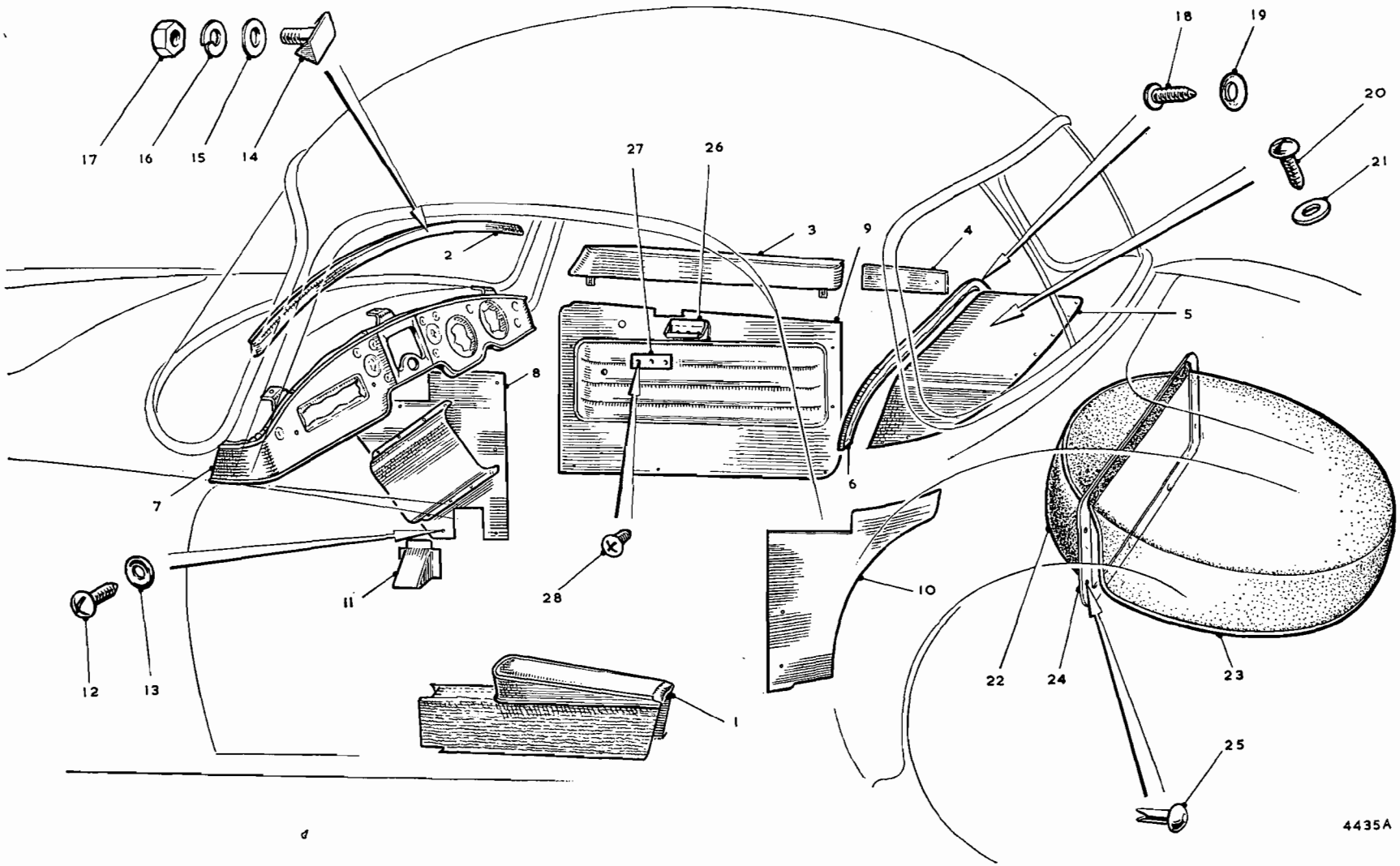

To face page R.36

Item No.	DESCRIPTION	Commencing (C) 20671 Part Number	Illus. No.	Qty. per Vehicle RHD	Qty. per Vehicle LHD	Unit of Issue	Type of Vehicle	MODIFICATIONS New Part Number	MODIFICATIONS Change Point	MODIFICATIONS Amdt. No.	REMARKS
	Trimming—*continued*										
1	**Liner—rear quarter—R/H**] **Red**	**AFH4646**	**RN10**	**1**	**1**						
2	**Liner—rear quarter—L/H**]	**AFH4647**		**1**	**1**						
3	Liner—rear quarter—R/H] Green	AFH5580		1	1						
4	Liner—rear quarter—L/H]	AFH5581		1	1						
5	Liner—rear quarter—R/H] Grey	AFH5582		1	1						
6	Liner—rear quarter—L/H]	AFH5583		1	1						
7	Liner—rear quarter—R/H] Black	AFH5584		1	1						
8	Liner—rear quarter—L/H]	AFH5585		1	1						
9	**Dash side mounting cover—Red**	**AFH2567**	**RN11**	**2**	**2**						
10	Dash side mounting cover—Green	AFH5606		2	2						
11	Dash side mounting cover—Grey	AFH5607		2	2						
12	Dash side mounting cover—Black	AFH5608		2	2						
13	**Door sealing rubber and clips assembly—Red**	**AFH4562**		**2**	**2**						
14	Door sealing rubber and clips assembly—Green	AFH4563		2	2						
15	Door sealing rubber and clips assembly—Grey	AFH4564		2	2						
16	Door sealing rubber and clips assembly—Black	AFH4565		2	2						
17	Retainer for door sealing rubber—R/H	AFH2722		1	1						
18	Retainer for door sealing rubber—L/H	AFH2723		1	1						
19	Screw fixing retainer to sill	AJD8172		12	12						
20	Pad for sealing 'A' post—R/H	AFH4822		1	1						
21	Pad for sealing 'A' post—L/H	AFH4823		1	1						
22	Rubber for sealing door hinge pillar	AFH4819		2	2						
23	**Piping for door hinge pillar—Red**	**AFH4771**		**2**	**2**						
24	Piping for door hinge pillar—Green	AFH4772		2	2						
25	Piping for door hinge pillar—Grey	AFH4773		2	2		Coupé				
26	Piping for door hinge pillar—Black	AFH4774		2	2						
27	**Piping for trim—Red**	**AFH4835**		**A/R**	**A/R**						
28	Piping for trim—Green	AFH4836		A/R	A/R						
29	Piping for trim—Grey	AFH4837		A/R	A/R						
30	Piping for trim—White	AFH4838		A/R	A/R						
31	Piping for trim—Black	AFH4839		A/R	A/R						
32	Piping for trim—Blue	AFH4840		A/R	A/R						
33	Screw fixing liners to body (self-tapping)	RTP404	RN12	30	30						
34	Washer—cup—No. 4—for screw	7701	RN13	30	30						
35	Bolt (claw head) fixing dash trim roll to body	AFH1900	RN14	6	6						
36	Washer (plain)	PWZ203	RN15	6	6						
37	Washer (spring)	LWZ203	RN16	6	6						
38	Nut for claw head bolt	FNZ103	RN17	6	6						
39	Screw fixing rear shelf fillet to body	RTP606	RN18	6	6						
40	Washer—cup—No. 6—for screw	7700	RN19	6	6						
41	Screw fixing rear shelf to body	PTZ604	RN20	4	4						
42	Washer (plain)	PWZ202	RN21	4	4						
43	**Spare wheel cover—front**	**AFH5786**	**RN22**	**1**	**1**						
44	**Spare wheel cover—rear**	**AFH2572**	**RN23**	**1**	**1**						
45	Spare wheel cover frame	AFH1731	RN24	1	1						
46	Rivets for cover frame	AFH5452	RN25	12	12						
47	**Door-pull**	**AFH4512**	**RN26**	**2**	**2**						
48	Plate fixing door-pull	AFB776	RN27	2	2						
49	Screw fixing plate to door	CTZ603	RN28	6	6						

Item No.	DESCRIPTION	Commencing (C) 20671 Part Number	Illus. No.	Qty. per Vehicle RHD	Qty. per Vehicle LHD	Unit of Issue	Type of Vehicle	MODIFICATIONS New Part Number	MODIFICATIONS Change Point	MODIFICATIONS Amdt. No.	REMARKS
	Trimming—*continued*										
1	**Carpet assembly—front R/H**	**AFH5754**	**RO1**	**1**				**AFH6536**	**Com. (C) 61504**		
2	Carpet assembly—front R/H	AFH5756			1			AFH6537			
3	**Carpet assembly—front L/H**	**AFH5755**	**RO2**	**1**							
4	Carpet assembly—front L/H	AFH5757			1						
5	Carpet assembly—tunnel—front	AFH5762	RO3	1	1			AFH6535	Com. (C) 61504		
6	Carpet assembly—tunnel—intermediate	AFH5763	RO4	1	1						
7	**Carpet assembly—rear floor—R/H**	**AFH5764**	**RO5**	**1**	**1**						
8	**Carpet assembly—rear floor—L/H**	**AFH5765**	**RO6**	**1**	**1**						
9	Carpet tunnel—rear (Grey)—and arm-rest assembly—Red	AFH4661	RO7	1	1						
10	Carpet tunnel—rear (Grey)—and arm-rest assembly—Green	AFH6550		1	1						
11	Carpet tunnel—rear (Grey)—and arm-rest assembly—Grey	AFH6551		1	1						
12	Carpet tunnel—rear (Grey)—and arm-rest assembly—Black/White	AFH6552		1	1						
13	Carpet tunnel—rear (Grey)—and arm-rest assembly—Black/Red	AFH6553		1	1						
14	Carpet tunnel—rear (Grey)—and arm-rest assembly—Black/Green	AFH6554		1	1						
15	Carpet tunnel—rear (Grey)—and arm-rest assembly—Black/Blue	AFH6555		1	1						
16	Carpet—rear bulkhead	AFH4760	RO8	1	1						
17	Carpet—battery cover	AFH4761	RO9	1	1						
18	Carpet—trunk floor front—R/H	AFH4764	RO10	1	1						
19	Carpet—trunk floor front—L/H	AFH4765	RO11	1	1						
20	Carpet—rear wheelarch—R/H	AFH4766	RO12	1	1						
21	Carpet—rear wheelarch—L/H	AFH4767	RO13	1	1		Coupé				
22	Carpet—spare wheel cover—front	AFH5786	RO14	1	1						
23	**Carpet material—bulk (Grey) 40″ wide**	**AFH5785**		**A/R**	**A/R**						
24	Felt—gearbox cover	AFH2477	RO15	1	1						
25	Felt—front tunnel	AFH1847	RO16	1	1						
26	Felt—rear tunnel	AFH2478	RO17	1	1						
27	Felt—tunnel top	AFH2479	RO18	1	1						
28	Felt—R/H front	AFH1848	RO19	1							
29	Felt—R/H front	AFH2480			1						
30	Felt—L/H front	AFH1849	RO20	1							
31	Felt—R/H front	AFH2481			1						
32	Lift-the-dot fastener—carpets	7H9962	RO21	16	16						
33	Clinch plate—carpets	7H9963	RO22	16	16						
34	Durable dot button—carpet—tunnel	7H9864	RO23	1	1						
35	Durable dot socket—carpet—tunnel	7H9866	RO24	1	1						
36	Durable dot stud—carpet—tunnel	7H9867	RO25	1	1						
37	Durable dot eyelet—carpet—tunnel	7H9868	RO26	1	1						
38	**Headlining (Off White)**	**AFH4657**	**RO27**	**1**	**1**						
39	Listing rod—headlining—front	AFH4485	RO28	1	1						
40	Listing rod—headlining—centre	AFH4486	RO29	1	1						
41	Listing rod—headlining—rear	AFH4487	RO30	1	1						
42	Screw fixing listing rod to body	AJD8172	RO31	8	8						

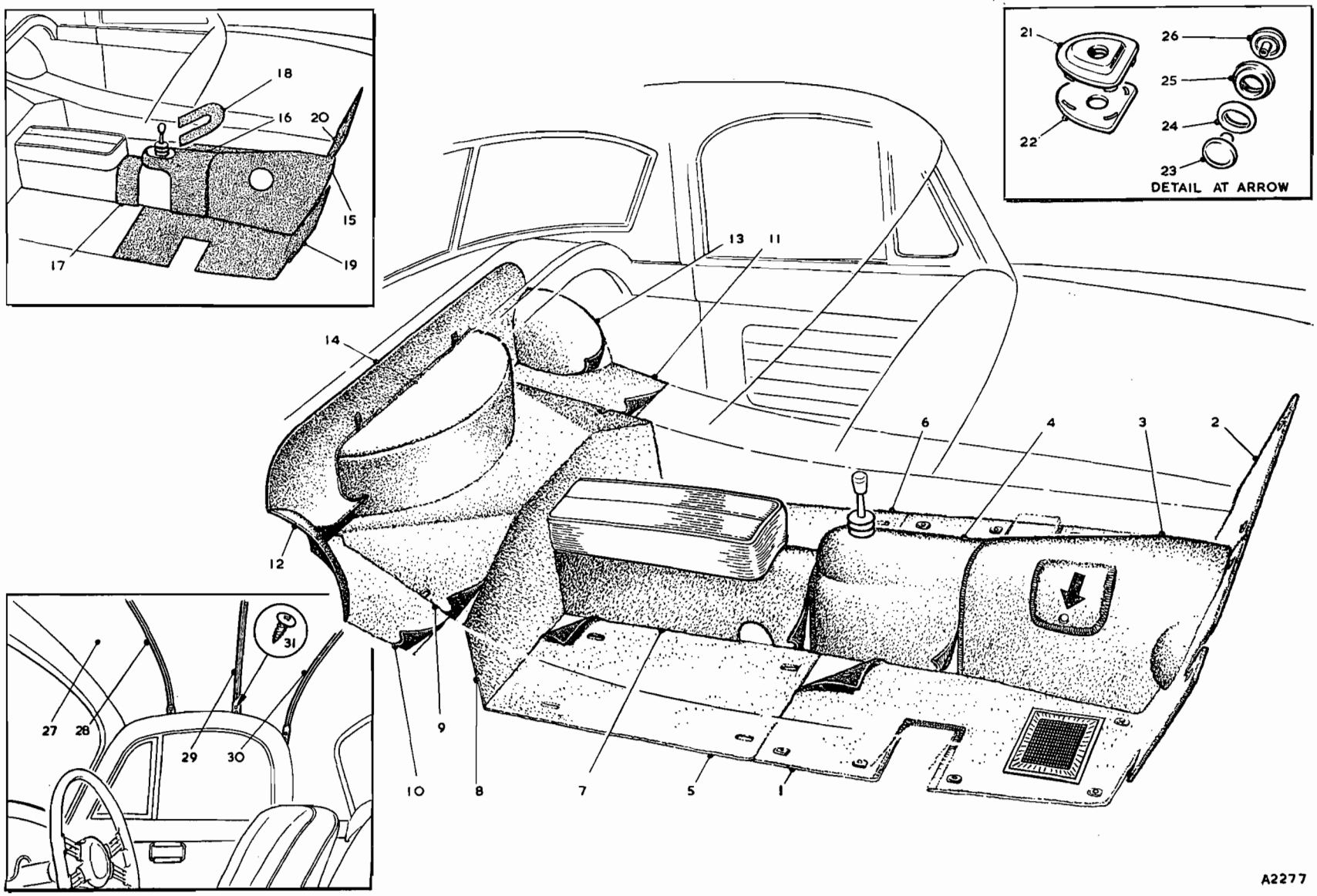

To face page R.37

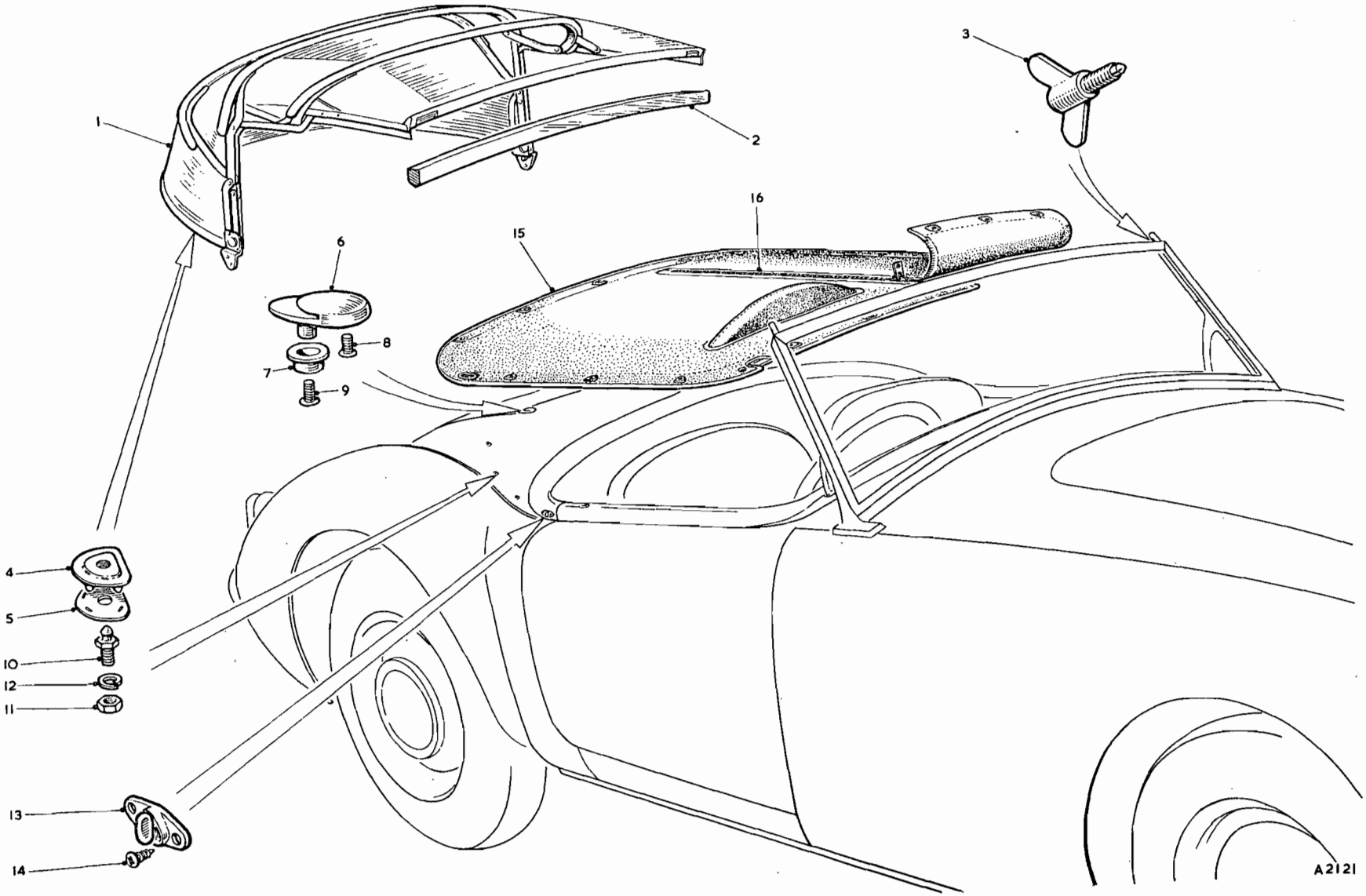

To face page R.38

Item No.	DESCRIPTION	Commencing (C) 10101 Part Number	Illus. No.	Qty. per Vehicle RHD	Qty. per Vehicle LHD	Unit of Issue	Type of Vehicle	MODIFICATIONS New Part Number	MODIFICATIONS Change Point	MODIFICATIONS Amdt. No.	REMARKS
	HOOD										
1	**Hood assembly**	**AFH1740**	**RP1**	1	1			**AFH2726**	**Com. (C) 10501**		**State colour**
2	**Hood assembly—Black**			1	1			**AKE1760**	**Com. (C) 20162**		
3	**Hood assembly—Ice Blue**			1	1			**AKE1761**			
4	**Frame assembly for hood**	**AFH2629**		1	1			**AFH2727**	**Com. (C) 10501**		
5	Stick—hood	AFH1746	RP2	1	1						
6	Socket—stick	AFH2635		2	2						
7	Wing bolt fixing hood to screen	MB22438	RP3	2	2						
8	**Canopy assembly—hood—Black**	**AKE1762**		1	1						
9	**Canopy assembly—hood—Ice Blue**	**AKE1763**		1	1						
10	Lift-the-dot fastener	7H9961	RP4	6	6						
11	Lift-the-dot clinch plate	7H9963	RP5	6	6						
12	Turn-button fastener eyelet	97H497		2	2						
13	Turn-button fastener eyelet washer	97H498		2	2						
14	Attachment plate—hood—rear—to body	AFH2659		1	1						
15	Retaining plate—hood—rear	AFH1741	RP6	2	2						
16	Cup washer for hood retaining plate	MB19956	RP7	2	2						
17	Screw for retaining plate	PMZ0304	RP8	2	2						
18	Screw for retaining plate	PMZ0306	RP9	2	2						
19	Screw—peg—hood—rear fixing	17H9510	RP10	6	6						
20	Nut	AJD8012Z	RP11	6	6						
21	Washer (spring)	LWZ203	RP12	6	6						
22	Single turn-button	97H496	RP13	2	2						
23	Screw fixing turn-button	RTP404	RP14	4	4						
	TONNEAU COVER (Optional Extra)										
24	**Tonneau cover assembly—Black**	**AKE1756**	**RP15**	1				**AFH6572**	**Com. (C) 64332**		
25	**Tonneau cover assembly—Ice Blue**	**AKE1757**		1				**AFH6574**			
26	**Tonneau cover assembly—Black**	**AKE1758**			1			**AFH6571**	**Com. (C) 60637**		
27	**Tonneau cover assembly—Ice Blue**	**AKE1759**			1			**AFH6573**			
28	Zip fastener	AFH2687	RP16	1	1			AFH6608	Com. (C) (RHD) 64332, (LHD) 60637		
29	Lift-the-dot fastener	7H9961		20/12	20/12						Quantities reduced at (C) (RHD) 64332, (LHD) 60637
30	Lift-the-dot clinch plate	7H9963		20/12	20/12						
31	Single stud—2-screw plate base	97H499		8/6	8/6						
32	Screw fixing stud	RTP603		16/12	16/12						
33	Stud—2 B.A. hexagon base	97H717		12/6	12/6						
34	Washer (plain)	PWZ203		12/6	12/6						
35	Washer (spring)	LWZ203		12/6	12/6						
36	Nut	AJD8012Z		12/6	12/6						
37	Screw for stud	RMP0208		4	4				Fin. (C) (RHD) 6433, (LHD) 60636		
38	Washer (plain)	PWZ202		4	4						
39	Washer (spring)	LWZ202		4	4						
40	Nut	CNZ102		4	4						
41	Turn-button fastener eyelet	97H497		2	2						
42	Turn-button fastener eyelet washer	97H498		2	2						

Item No.	DESCRIPTION	Commencing (C) 10101 Part Number	Illus. No.	Qty. per Vehicle RHD	Qty. per Vehicle LHD	Unit of Issue	Type of Vehicle	MODIFICATIONS New Part Number	MODIFICATIONS Change Point	MODIFICATIONS Amdt. No.	REMARKS
	HARD TOP AND SLIDING SIDESCREENS (Optional Extra)										
1	**Hard top assembly**	**AHH5562**		1	1						
2	Window—rear	AHH5660	RQ1	1	1						
3	Rubber—sealing—for rear window	AHH5661	RQ2	1	1						
4	Strut—inner—rear window	AHH5662	RQ3	2	2						
5	Rubber for inner strut	AHH5663	RQ4	2	2						
6	Bracket—side—main	AHH5664	RQ5	2	2						
7	Screw fixing main bracket to canopy	AJD2446C	RQ6	4	4						
8	Rubber for side bracket	AHH5665	RQ7	2	2						
9	Bracket—rear retaining	AHH5666	RQ8	2	2						
10	Screw fixing bracket to canopy	RMP0307	RQ9	4	4						
11	Screw fixing rear bracket to inner strut	AJD2448C	RQ10	2	2						
12	Cap nut for bracket to inner strut screw	AJJ3125	RQ11	2	2						
13	Grommet for retaining bracket	AHH5667	RQ12	2	2						
14	Plate—backing—retaining bracket	AHH5674	RQ13	2	2						
15	Rubber—sealing—side	AHH5668	RQ14	2	2						
16	Rubber—sealing—rear	AHH5673	RQ15	1	1						
17	Rubber—sealing—canopy	AHH5669	RQ16	1	1						
18	Screw—thumb—canopy retaining	AHH5670	RQ17	2	2						
19	Rail—canopy—rubber end—R/H	AHH5671	RQ18	1	1						
20	Rail—canopy—rubber end—L/H	AHH5672		1	1						
21	**Clip—side—main retaining assembly**	**AHH5650**	**RQ19**	2	2						
22	Knob—knurled	AHH5652	RQ20	1	1						
23	Cap nut	AHH5653	RQ21	1	1						
24	**Sliding sidescreen assembly—R/H**	**AHH5731**	**RQ22**	1	1						
25	**Sliding sidescreen assembly—L/H**	**AHH5732**		1	1						
26	Frame—R/H	AHH5733	RQ23	1	1						
27	Frame—L/H	AHH5734		1	1						
28	Fixing bracket—front—R/H	AHH5735	RQ24	1	1						
29	Fixing bracket—front—L/H	AHH5736		1	1						
30	Peg bracket—R/H	AHH5737	RQ25	1	1						
31	Peg bracket—L/H	AHH5738		1	1						
32	**Screen—fixed**	**AHH5739**	**RQ26**	2	2						
33	**Screw—sliding—R/H**	**AHH5740**	**RQ27**	1	1						
34	**Screw—sliding—L/H**	**AHH5741**		1	1						
35	Sealing rubber—R/H	AHH5808	RQ28	1	1						
36	Sealing rubber—L/H	AHH5742		1	1						
37	Retainer for sealing rubber—R/H	AHH5743	RQ29	1	1						
38	Retainer for sealing rubber—L/H	AHH5744		1	1						
39	Glazing felt—front	AHH5745	RQ30	2	2						
40	Glazing felt—upper	AHH5746	RQ31	2	2						
41	Glazing felt—lower	AHH5747	RQ32	2	2						

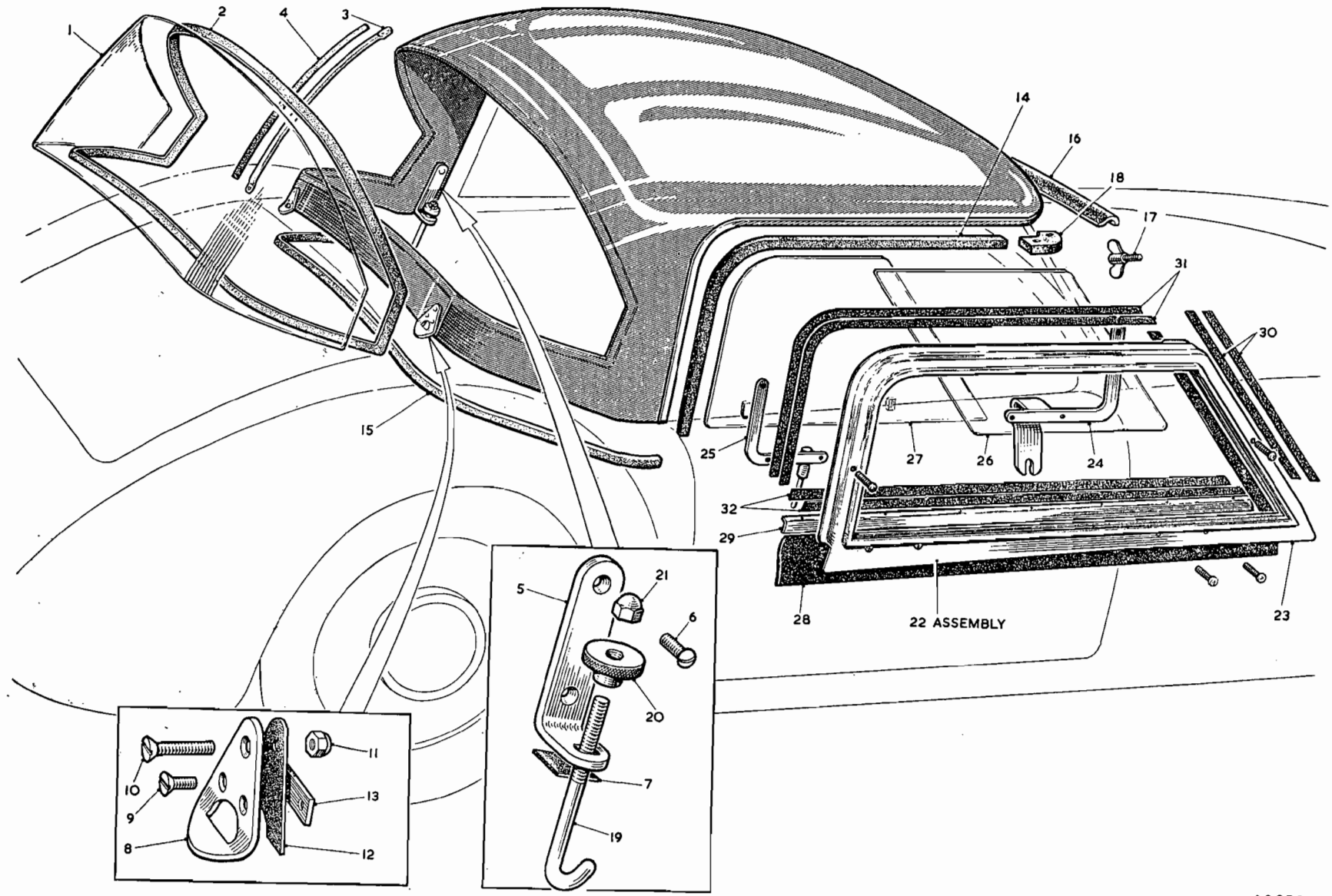

To face page R.39

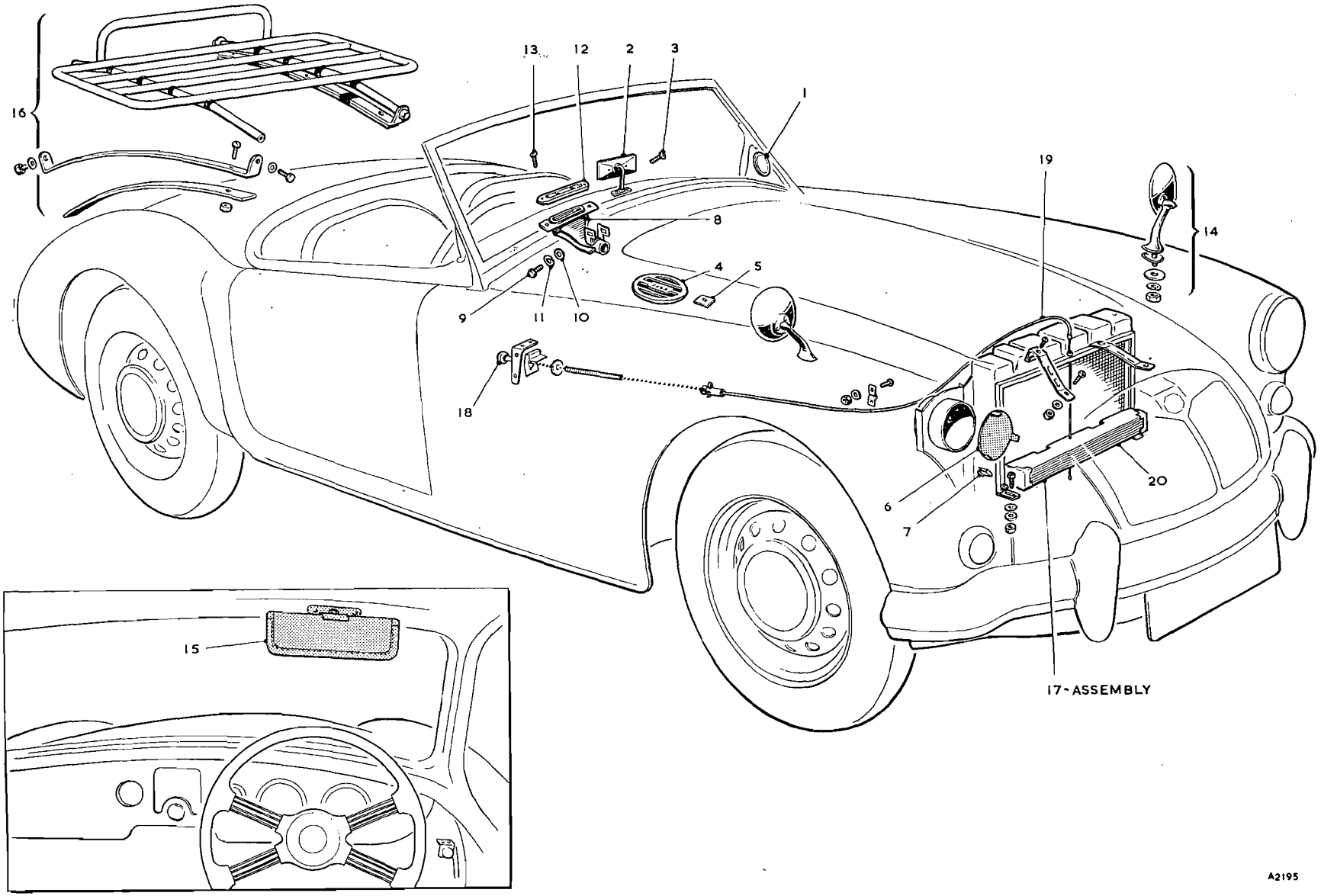

To face page R.40

Item No.	DESCRIPTION	Commencing (C) 10101 Part Number	Illus. No.	Qty. per Vehicle RHD	Qty. per Vehicle LHD	Unit of Issue	Type of Vehicle	MODIFICATIONS New Part Number	MODIFICATIONS Change Point	MODIFICATIONS Amdt. No.	REMARKS
	SUNDRIES										
1	**Licence holder**	**180260**	**RR1**	**1**	**1**		**Tourer**				
2	**Licence holder**	**14A3823**		**1**	**1**		**Coupé**				
3	**Mirror—rear view**	**AHH5198**	**RR2**	**1**	**1**						
4	Screw fixing mirror to body	RMP0310	RR3	2	2						
5	**Ventilator grille for air duct (MGA)**	**AHH5294**	**RR4**	**2**	**2**						
6	Spire clip fixing grille	PFS104	RR5	8	8						
7	Blanking disc for air tube radiator support	AHH5396	RR6	1	1						
8	Clip fixing blanking disc	ADH3809	RR7	3	3						
9	Grommet ($\frac{1}{2}$" dia.) for master cylinder/bulkhead holes	RFR208		8	8						
10	Grommet ($\frac{1}{4}$" dia.) for cars less radio	RFR204		5	5			RFN204	Com. (C) 31449		
11	Grommet for dip switch hole blanking	4G2541		1	1						
12	Grommet for control box blanking holes	2H8041		2	2						
13	Grommet for dipper switch blanking holes	2H8041		3	3						
14	**Nozzle—R/H demister (with seal)**	**AFH1748**	**RR8**	**1**	**1**						
15	**Nozzle—L/H demister (with seal)**	**AFH1749**		**1**	**1**						
16	Screw fixing demister nozzle	AFH2587	RR9	4	4						
17	Washer (plain)	PWZ203	RR10	4	4						
18	Washer (spring)	LWZ203	RR11	4	4						
19	Finisher for demister slot	182143	RR12	2	2						
20	Screw fixing demister slot finisher	RTP804	RR13	4	4						
21	**Ashtray (chrome and black enamel)**	**AHH5539**		**1**	**1**						**Optional extras**
22	Screw fixing ashtray	PTP604		4	4						
23	**Badge bar assembly**	**AHH5565**		**1**	**1**						
24	**Cigar-lighter c/w leads**	**AHH5759**		**1**	**1**						

Item No.	DESCRIPTION	Commencing (C) 10101 Part Number	Illus. No.	Qty. per Vehicle RHD	Qty. per Vehicle LHD	Unit of Issue	Type of Vehicle	MODIFICATIONS New Part Number	MODIFICATIONS Change Point	MODIFICATIONS Amdt. No.	REMARKS
	Sundries—*continued*										
1	**Mirror assembly c/w rubber washer and screws—R/H wing**	**AHH5526**		1	1						] **Alternatives**
2	**Mirror assembly c/w rubber washer and screws—L/H wing**	**AHH5527**	**RR14**	1	1						
3	**Mirror assembly—R/H or L/H wing**	**BHA4066**		2	2						
4	**Sun visor—trimmed**	**AHH5710**	**RR15**	2	2		] **Coupé**				
5	Screw fixing sun visor	RTP806		4	4						
6	**Luggage carrier c/w fittings**	**AHH5495**	**RR16**	1	1						Optional extras
7	Screw fixing luggage grid to boot lid	PMP0514		6	6						
8	Nut (nylon) for screw	LNZ205		6	6						
9	Washer (plain) for screw	PWZ105		6	6						
10	**Radiator blind assembly**	**AHH5536**	**RR17**	1	1						
11	Ball chain with knob	7H9833	RR18	1	1						
12	Cable fixing blind to chain	7H9832	RR19	1	1						
13	Roller and blind	7H9834	RR20	1	1						

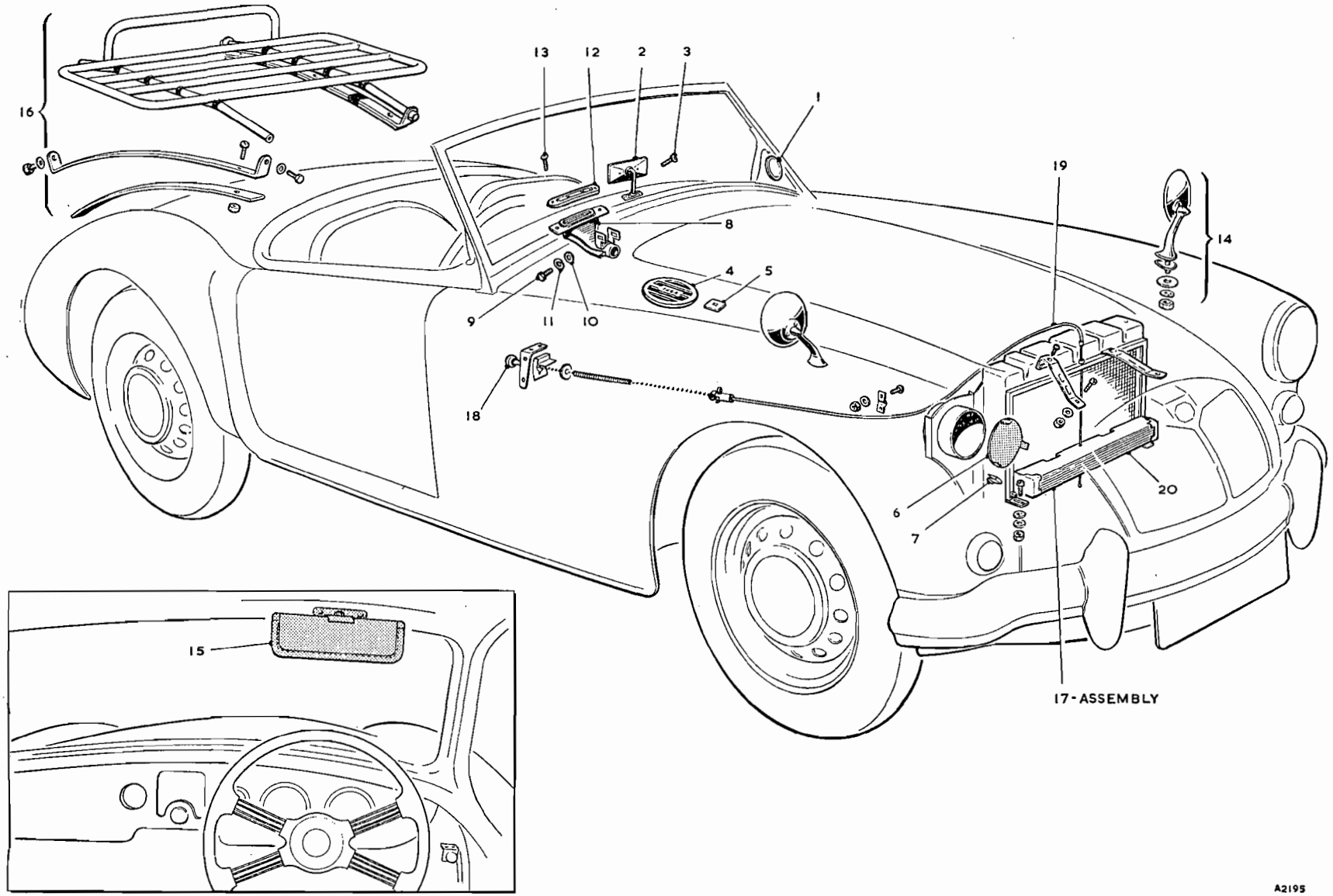

To face page R.41

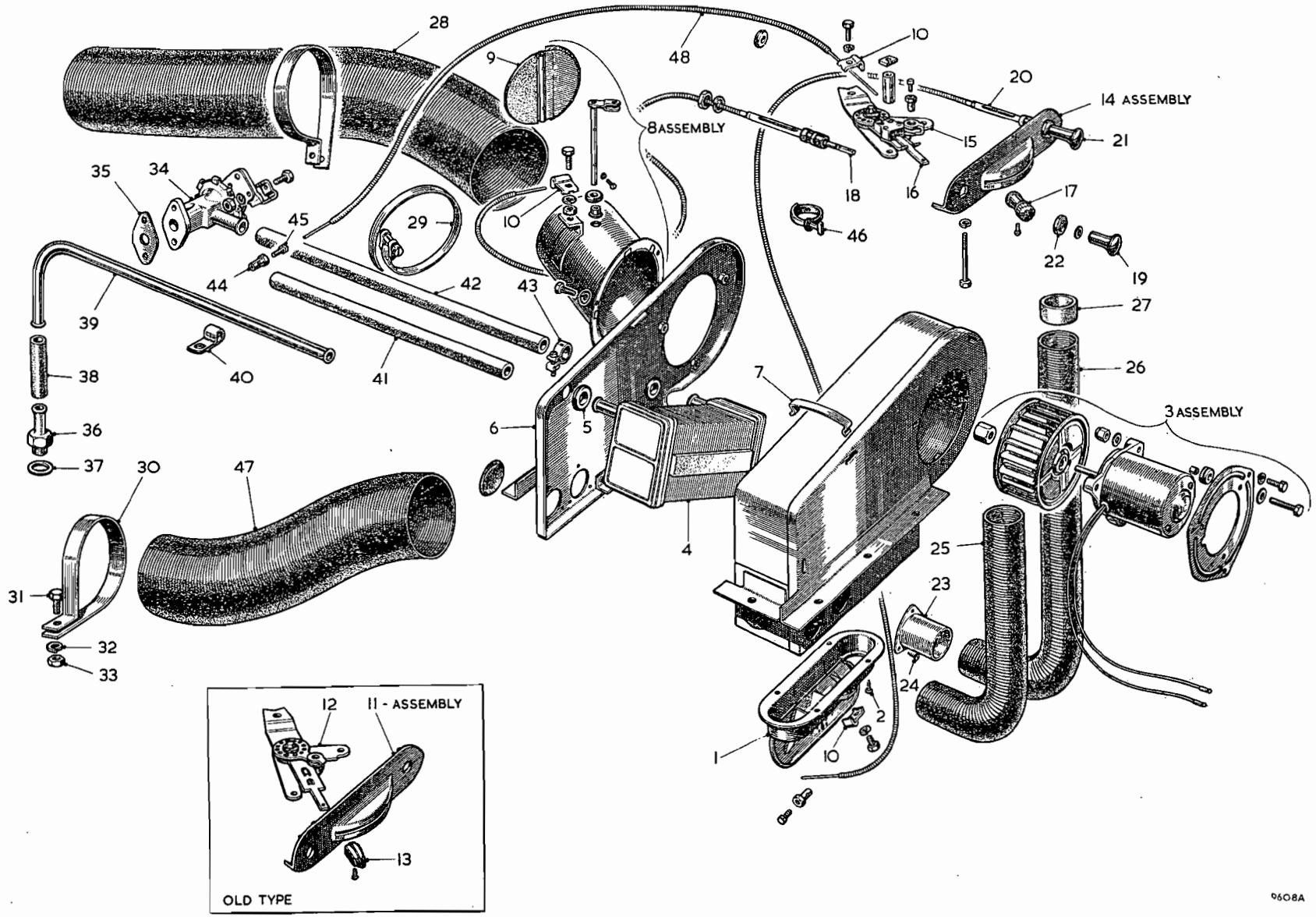

To face page R.42

Item No.	DESCRIPTION	Commencing (C) 10101 Part Number	Illus. No.	Qty. per Vehicle RHD	Qty. per Vehicle LHD	Unit of Issue	Type of Vehicle	MODIFICATIONS New Part Number	MODIFICATIONS Change Point	MODIFICATIONS Amdt. No.	REMARKS
	HEATING AND VENTILATING EQUIPMENT (Optional Extra)										
1	**Heater kit assembly**	**AHH5422**		1	1						
2	**Heater unit assembly**	**AHH5423**		1	1						
3	Outlet door assembly	7H1995	RS1	1	1						
4	Screw fixing outlet door	7H1988	RS2	4	4						
5	Motor and runner	17H1	RS3	1	1						
6	Radiator	17H2	RS4	1	1						
7	Grommet	7H1993	RS5	2	2						
8	Side cover—heater	7H1998	RS6	1	1						
9	Clip for side cover	7H1999	RS7	4	4						
10	**Flap valve assembly**	**7H1994**	**RS8**	1	1						
11	Flap	7H1996	RS9	1	1						
12	Clamp for cable	7H1997	RS10	3	3						
13	**Lever control assembly (less cables)**	**AHH5424**	**RS11**	1	1						
14	Escutcheon—heater control unit	17H518	RS22	1	1						First type finished No number available
15	Lever control	7H1984	RS12	1	1						
16	Knob	7H1981	RS13	1	1						
17	**Lever control assembly (less cables)**		**RS14**	1	1			**AHH5531**			
18	Escutcheon—heater control unit	17H518	RS22	1	1						
19	Lever control sub-assembly		RS15	1	1			7H1985			Second type
20	Lever and switch assembly		RS16	1	1			7H1986			
21	Knob		RS17	1	1			7H1980			
22	**Air control cable and knob assembly**	**AHH5601**	**RS18**	1	1						
23	Knob	17H827	RS19	1	1						
24	**Demist control cable and knob assembly**	**AHH5602**	**RS20**	1	1						
25	Knob	17H827	RS21	1	1						
26	Demister tubes	AHH5426	RS23	2	2						
27	Screw fixing demister tubes (cadmium-plated)	AHH5591	RS24	6	6						
28	Air hose—14″	AHH5427	RS25	1	1						
29	Air hose—25″	AHH5428	RS26	1	1						
30	Adaptors	AHH5429	RS27	2	2						
31	Air hose—31″	AHH5430	RS28	1	1						
32	Clip	14G800	RS29	1	1						
33	Clip—large	AHH5714	RS30	2	2						
34	Screw for clip	PMZ0316	RS31	2	2						
35	Washer (spring) for clip screw	LWZ203	RS32	2	2						
36	Nut for clip screw	FNZ103	RS33	2	2						
37	Water valve assembly	AHH5432	RS34	1	1			BHA4132	Com. (C) 61160		
38	Gasket for water valve	AHH5433	RS35	1	1						
39	Screw for water valve	AHH5591		2	2						
40	Screw for water valve	7H1990		1	1						
41	Nut for water valve	7H1991		1	1						
42	Washer (spring) for water valve	7H1992		1	1						

Item No.	DESCRIPTION	Commencing (C) 10101 Part Number	Illus. No.	Qty. per Vehicle RHD	Qty. per Vehicle LHD	Unit of Issue	Type of Vehicle	MODIFICATIONS New Part Number	MODIFICATIONS Change Point	MODIFICATIONS Amdt. No.	REMARKS
	Heater and Ventilating Equipment—*continued*										
1	Water union	AMK8847	RS36	1	1						
2	Washer	300398	RS37	1	1						
3	Water pipe—2½″	AHH5434	RS38	1	1						
4	Water return pipe	AHH5435	RS39	1	1						
5	Clip	AHH5436	RS40	2	2						
6	Water hose—12½″	AHH5437	RS41	1	1						
7	Water hose—14″	AHH5438	RS42	1	1						
8	Hose clip	301140	RS43	6	6						
9	Trunnion	14G6451	RS44	4/3	4/3						Quantity reduced at (C) 61160
10	Trunnion			1	1			14A5753	Com. (C) 61160		
11	Screw for trunnion (cadmium-plated)	AHH5593	RS45	4	4						
12	Cable clip	AHH5440	RS46	1	1						
13	Air hose	AHH5394	RS47	1	1						
14	Wire cable assembly	AHH5529	RS48	1	1						
15	**Cold air kit assembly**	**AHH5532**		1	1						
16	Case assembly	AHH5537		1	1						
17	Switch and knob	AHH5910		1	1						
18	Bracket—switch	AHH5912		1	1						
19	Screw fixing bracket	17H1940		2	2						
20	Trunnion	14G6451		1	1						
21	Air hose—31″	AHH5430		1	1						
22	Clip	14G800		1	1						
23	Clip—large	AHH5714		2	2						
24	Washer (spring)	LWZ203		2	2						
25	Nut	FNZ103		2	2						
26	Air hose	AHH5394		1	1						
27	Cable and knob assembly—air control	AHH5750		1	1						
28	Bracket—push-pull control	AHH5911		1	1						
29	Screw fixing bracket	17H1940		2	2						

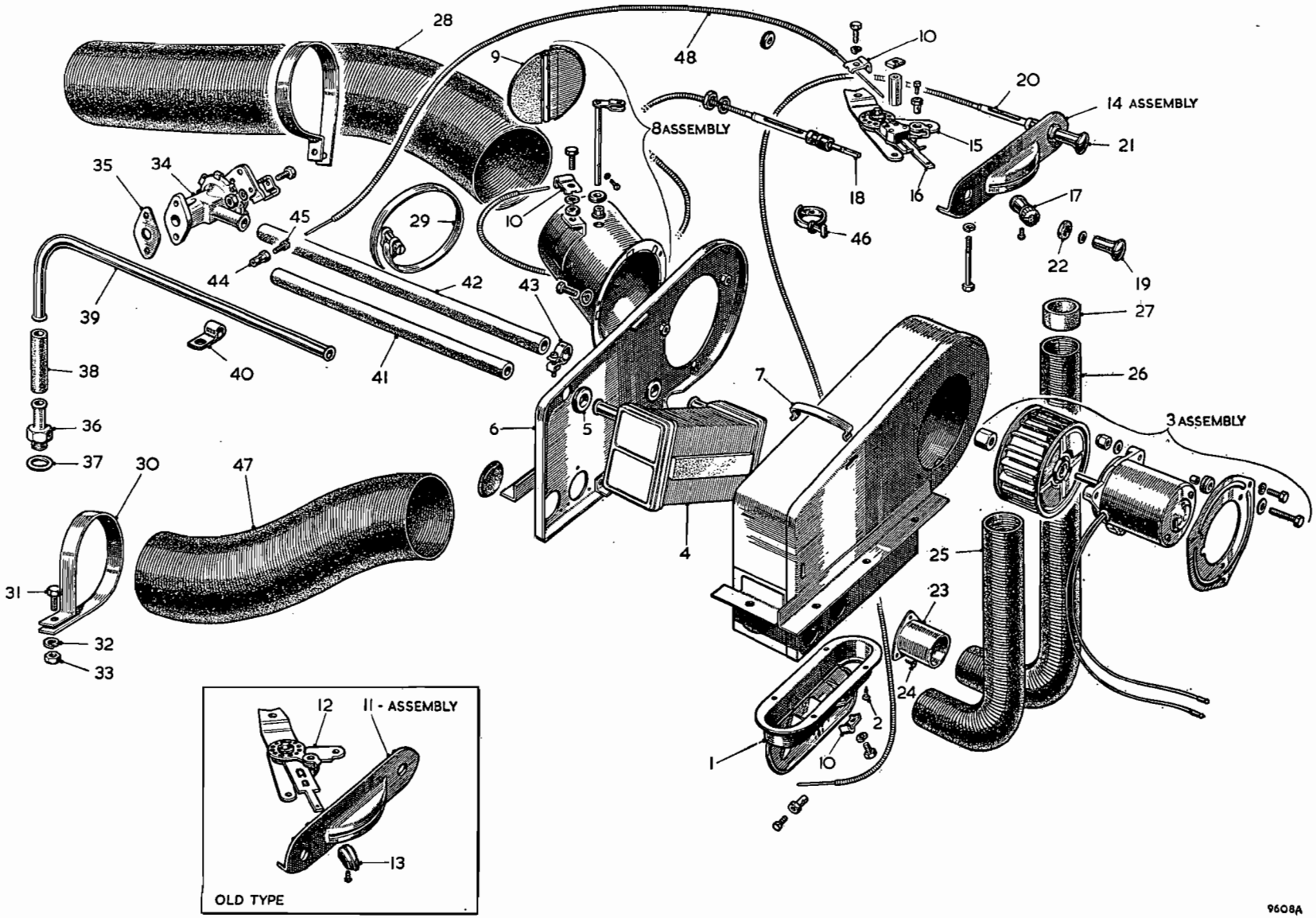

To face page R.43

Item No.	DESCRIPTION	Commencing (C) 10101 Part Number	Illus. No.	Qty. per Vehicle RHD	Qty. per Vehicle LHD	Unit of Issue	Type of Vehicle	MODIFICATIONS New Part Number	MODIFICATIONS Change Point	MODIFICATIONS Amdt. No.	REMARKS
	TOOL KIT										
1	**Bag for tools**	**181756**		1	1						
2	Strap for tool bag	186890		2	2						
3	***Roll for tools***	**ACG5247**		1	1						
4	Spanner—box—$\frac{7}{16}$″ and $\frac{1}{2}$″ unified	BXS0708		1	1						
5	Spanner—box—$\frac{9}{16}$″ and $\frac{5}{8}$″ unified	BXS0910		1	1						
6	Spanner—box—$\frac{11}{16}$″ and $\frac{3}{4}$″ unified	BXS1112		1	1						
7	Spanner—$\frac{7}{16}$″ and $\frac{1}{2}$″ unified	OES0708		1	1						
8	Spanner—$\frac{9}{16}$″ and $\frac{5}{8}$″ unified	OES0910		1	1						
9	Spanner—$\frac{11}{16}$″ and $\frac{3}{4}$″ unified	OES1112		1	1						
10	Spanner—box—sparking plug	AJD6918		1	1						
11	Tommy-bar	ACA5216		1	1						
12	Spanner—tappet adjusting (ring type)	ACH5245		1	1						
13	Spanner—cylinder head	ACH5236		1	1						
14	Gauge—tappet feeler (·017″)	AHH5594		1	1						
15	Spanner—adjustable	ACG5283		1	1						
16	Screwdriver—No. 2 (recessed-head screw)	ACH5490		1	1						
17	Screwdriver	ACA5218		1	1						
18	Pliers	AJJ279		1	1						
19	Lever—tyre (spoon)	AJJ281		2	2						
20	Spanner—tyre valve	AMK9958		1	1						
21	Screwdriver—distributor and gauge	3H2648		1	1						
22	Key—rear axle drain plug	1G7372		1	1						
23	Tyre pump and connection	BHA4067		1	1						
24	Grease gun	BHA4076		1	1						
25	Starting-handle	AHH5080		1	1						
26	Jack—lifting	AHH5124		1	1						
27	Wheelbrace	ACA5217		1	1						Disc wheels only
28	Hammer—copper	11B5166		1	1						Wire wheels only
29	Spanner for hub cap **(GERMANY only)**	AHH5839		1	1						

Item No.	DESCRIPTION	Commencing (C) 10101 Part Number	Illus. No.	Qty. per Vehicle RHD	Qty. per Vehicle LHD	Unit of Issue	Type of Vehicle	MODIFICATIONS New Part Number	MODIFICATIONS Change Point	MODIFICATIONS Amdt. No.	REMARKS
	PAINT—TOUCHING-UP—AIR-DRYING										
1	Black	AKJ1451		1 pt.	1 pt.						
2	Black	AKJ1452		1 qt.	1 qt.						
3	Black	AKJ1453		½ gal.	½ gal.						
4	Black	AKJ1454		1 gal.	1 gal.						
5	Black	AKJ1455		5 gal.	5 gal.						
6	Glacier Blue	AKJ16		1 pt.	1 pt.						
7	Glacier Blue	AKJ17		1 qt.	1 qt.						
8	Glacier Blue	AKJ18		½ gal.	½ gal.		Tourer				
9	Glacier Blue	AKJ19		1 gal.	1 gal.						
10	Glacier Blue	AKJ20		5 gal.	5 gal.						
11	Mineral Blue	AKJ41		1 pt.	1 pt.						
12	Mineral Blue	AKJ42		1 qt.	1 qt.						
13	Mineral Blue	AKJ43		½ gal.	½ gal.		Coupé				
14	Mineral Blue	AKJ44		1 gal.	1 gal.						
15	Mineral Blue	AKJ45		5 gal.	5 gal.						
16	Old English White	AKJ1261		1 pt.	1 pt.						
17	Old English White	AKJ1262		1 qt.	1 qt.						
18	Old English White	AKJ1263		½ gal.	½ gal.						
19	Old English White	AKJ1264		1 gal.	1 gal.						
20	Old English White	AKJ1265		5 gal.	5 gal.						
21	Orient Red	AKJ1011		1 pt.	1 pt.						
22	Orient Red	AKJ1012		1 qt.	1 qt.						
23	Orient Red	AKJ1013		½ gal.	½ gal.						
24	Orient Red	AKJ1014		1 gal.	1 gal.						
25	Orient Red	AKJ1015		5 gal.	5 gal.						
26	Aluminium	AKJ1476		1 pt.	1 pt.						
27	Aluminium	AKJ1477		1 qt.	1 qt.						
28	Aluminium	AKJ1478		½ gal.	½ gal.						
29	Aluminium	AKJ1479		1 gal.	1 gal.						
30	Aluminium	AKJ1480		5 gal.	5 gal.						
31	Tyrolite Green	AKJ781		1 pt.	1 pt.						
32	Tyrolite Green	AKJ782		1 qt.	1 qt.						
33	Tyrolite Green	AKJ783		½ gal.	½ gal.		Tourer		Fin. (C) 48999		
34	Tyrolite Green	AKJ784		1 gal.	1 gal.						
35	Tyrolite Green	AKJ785		5 gal.	5 gal.						
36	Island Green	AKJ776		1 pt.	1 pt.						
37	Island Green	AKJ777		1 qt.	1 qt.						
38	Island Green	AKJ778		½ gal.	½ gal.		Coupé		Fin. (C) 48979		
39	Island Green	AKJ779		1 gal.	1 gal.						
40	Island Green	AKJ780		5 gal.	5 gal.						
41	Ash Green			1 pt.	1 pt.			AKJ756			
42	Ash Green			1 qt.	1 qt.			AKJ757	Com. (C) 49000 Tourer, 48980 Coupé		
43	Ash Green			½ gal.	½ gal.			AKJ758			
44	Ash Green			1 gal.	1 gal.			AKJ759			
45	Ash Green			5 gal.	5 gal.			AKJ760			

Item No.	DESCRIPTION	Commencing (C) 10101 Part Number	Illus. No.	Qty. per Vehicle RHD	Qty. per Vehicle LHD	Unit of Issue	Type of Vehicle	MODIFICATIONS New Part Number	MODIFICATIONS Change Point	MODIFICATIONS Amdt. No.	REMARKS
	Paint—Touching-up—Air-drying—*continued*										
1	Thinners	AKJ2001		1 pt.	1 pt.						
2	Thinners	AKJ2002		1 qt.	1 qt.						
3	Thinners	AKJ2003		½ gal.	½ gal.						
4	Thinners	AKJ2004		1 gal.	1 gal.						
5	Thinners	AKJ2005		5 gal.	5 gal.						
6	Tipon paint pencil—Black	ADE1533		1	1	12					
7	Tipon paint pencil—Glacier Blue	ADE1559		1	1	12					
8	Tipon paint pencil—Mineral Blue	ADE1654		1	1	12					
9	Tipon paint pencil—Old English White	ADE1560		1	1	12					
10	Tipon paint pencil—Orient Red	ADE1557		1	1	12					
11	Tipon paint pencil—Tyrolite Green	ADE1558		1	1	12					
12	Tipon paint pencil—Island Green	ADE1562		1	1	12					

Item No.	DESCRIPTION	Commencing (E) GB101 Part Number	Illus. No.	Qty. per Vehicle RHD	Qty. per Vehicle LHD	Unit of Issue	Type of Vehicle	MODIFICATIONS New Part Number	MODIFICATIONS Change Point	MODIFICATIONS Amdt. No.	REMARKS
	SPECIAL TOOLS										
	ENGINE										
1	Reamer (basic tool)—camshaft liner	18G123A		1	1						
2	Pilot—liner reamer	18G123AB		1	1						
3	Pilot—liner reamer	18G123AC		1	1						
4	Pilot—liner reamer	18G123L		1	1						
5	Pilot—liner reamer	18G123AD		1	1						
6	Pilot—liner reamer	18G123T		1	1						
7	Cutter—liner reamer	18G123B		1	1						
8	Cutter—liner reamer	18G123E		1	1						
9	Cutter—liner reamer	18G123F		1	1						
10	Remover and replacer (basic tool)—camshaft liner	18G124A		1	1						
11	Adaptor—liner replacer and remover	18G124B		1	1						
12	Adaptor—liner replacer and remover	18G124C		1	1						
13	Adaptor—liner replacer and remover	18G124F		1	1						
14	Adaptor—liner replacer and remover	18G124H		1	1						
15	Glaze breaker—inlet valve seat	18G174A		1	1						
16	Glaze breaker—exhaust valve seat	18G25A		1	1						
17	Cutter—exhaust valve seat finishing—45°	18G25		1	1						
18	Cutter—inlet valve seat finishing	18G174		1	1						
19	Cutter—top—inlet valve seat narrowing	18G28B		1	1						
20	Cutter—top—exhaust valve seat narrowing	18G25B		1	1						
21	Cutter—bottom—inlet valve seat narrowing	18G28C		1	1						
22	Cutter—bottom—exhaust valve seat narrowing	18G25C		1	1						
23	Pilot—valve seat cutter	18G174D		1	1						
24	Pilot—valve seat cutter	18G375D		1	1						
25	Handle—valve seat cutter	18G27		1	1						
26	Remover and replacer—water pump bearing	18G60		1	1						
27	Grinding tool—oil pump release valve	18G69		1	1						
28	Spanner—starting dog nut	18G98		1	1						
29	Remover and replacer—valve rocker bush	18G226		1	1						
30	Compressor—valve spring	18G45		1	1						
31	Compressor (bench type)—valve spring	18G273		1	1						
32	Suction grinder—valve	18G29		1	1						
33	Clamp—piston ring	18G55A		1	1						
34	Adaptor—main bearing cap remover	18G284A		1	1						
	CLUTCH										
35	Dismantling, assembling, and gauging fixture	18G99A		1	1						
36	Plate—centralizer	18G279		1	1						

Item No.	DESCRIPTION	Commencing (E) GB101 Part Number	Illus. No.	Qty. per Vehicle RHD	Qty. per Vehicle LHD	Unit of Issue	Type of Vehicle	MODIFICATIONS New Part Number	MODIFICATIONS Change Point	MODIFICATIONS Amdt. No.	REMARKS
	Special Tools—*continued*										
	GEARBOX										
1	Synchromesh assembly ring—3rd and 4th speed	18G223		1	1						
2	Synchromesh assembly ring—2nd speed	18G222		1	1						
3	Dummy layshaft	18G266		1	1						
4	Remover (basic tool)—rear extension oil seal	18G389		1	1						
5	Adaptor—oil seal remover	18G389B		1	1						
6	Adaptor handle—bearing and oil seal replacer	18G134		1	1						
7	Adaptor—oil seal replacer	18G134M		1	1			18G134N	Com. (E) GB10990		
	FRONT SUSPENSION										
8	Remover (basic tool)—front and rear hub plate	18G304		1	1						
9	Bolt—adaptor	18G304B		2	2						
10	Pad—thrust—adaptor	18G304J		1	1						
	STEERING										
11	'C' spanner—steering tie-rod	18G313		1	1						
12	Pin spanner—steering tie-rod	18G312		1	1						
13	Remover—steering-wheel	18G310		1	1						
	REAR AXLE										
14	Remover (basic tool)—bevel pinion outer race	18G264		1	1						
15	Remover and replacer—bevel pinion inner race	18G285		1	1						
16	Adaptor—bevel pinion outer race remover	18G264E		1	1						
17	Adaptor—bevel pinion outer race remover	18G264F		1	1						
18	Fibre box—outer race remover adaptor set	18G264K		1	1						
19	Wrench—bevel pinion flange	18G34A		1	1						
20	Torque wrench	18G372		1	1						
21	Gauge—rear axle pinion bearing preload	18G283		1	1						
22	Adaptor—preload gauge	18G283A		1	1						
23	Impulse extractor—rear axle shaft	18G284		1	1						
24	Gauge—bevel pinion and differential bearing setting	18G191B		1	1						
25	Remover (basic tool)—differential bearing	18G47C		1	1						
26	Adaptor—differential bearing remover	18G47T		1	1						
27	Remover and replacer—rear hub and differential bearing	18G134P		1	1						
28	Spanner—rear hub nut	18G152		1	1						
	BODY										
29	Jack—body and case	18G308B		1	1						
	BRAKES										
30	Wrench—bleeder screw	18G353									
	MISCELLANEOUS										
31	Hooks—2"—tool board	18G528		A/R	A/R						
32	Hooks—3"—tool board	18G529		A/R	A/R						

Item No.	DESCRIPTION	Commencing (C) 10101 Part Number	Illus. No.	Qty. per Vehicle RHD	Qty. per Vehicle LHD	Unit of Issue	Type of Vehicle	MODIFICATIONS New Part Number	MODIFICATIONS Change Point	MODIFICATIONS Amdt. No.	REMARKS
	LITERATURE										
1	**Service Parts List**	**AKD599**		1	1						
2	**Driver's Handbook**	**AKD598**		1	1			**AKD598G**	**Com. (C) 20671**		
3	**Workshop Manual**	**AKD600A**		1	1						
4	Driver's Handbook	AKD677		1	1						] German editions
5	Workshop Manual	AKD981		1	1						
6	Schedule of Repair Charges	AKD873A		1	1						
7	Schedule of Repair Times	AKD782B		1	1						
8	**'MGA' Tuning Booklet**	**AKD819A**		1	1						
9	Catalogue—B.M.C. Service Tools	AKD770		1	1						
10	B.M.C. Service Parts Price List	AKD693		1	1						
11	Service Literature Catalogue	AKD858A		1	1						
12	Maintenance Service Voucher Book	AKD727B		1	1						

PRINTED IN ENGLAND BY THE NUFFIELD PRESS LIMITED, COWLEY, OXFORD. 27/17 (19716) 2/60—7m